From the Publishers of Model Airplane News

Scale Aircraft Drawings

Volume I—World War I

Scale Drawings, Rare Photos, and Historical Data on Popular WW I Aircraft.



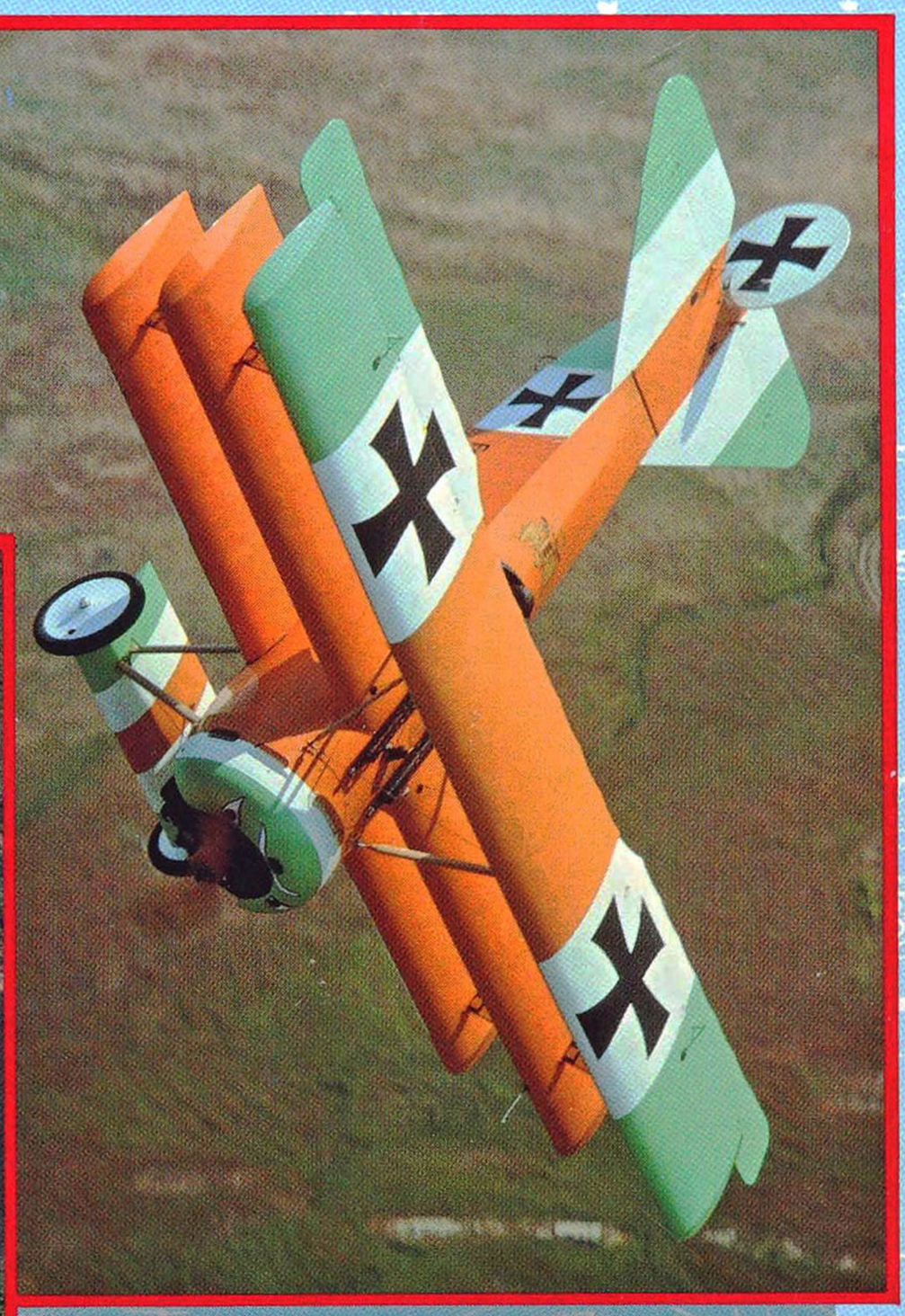

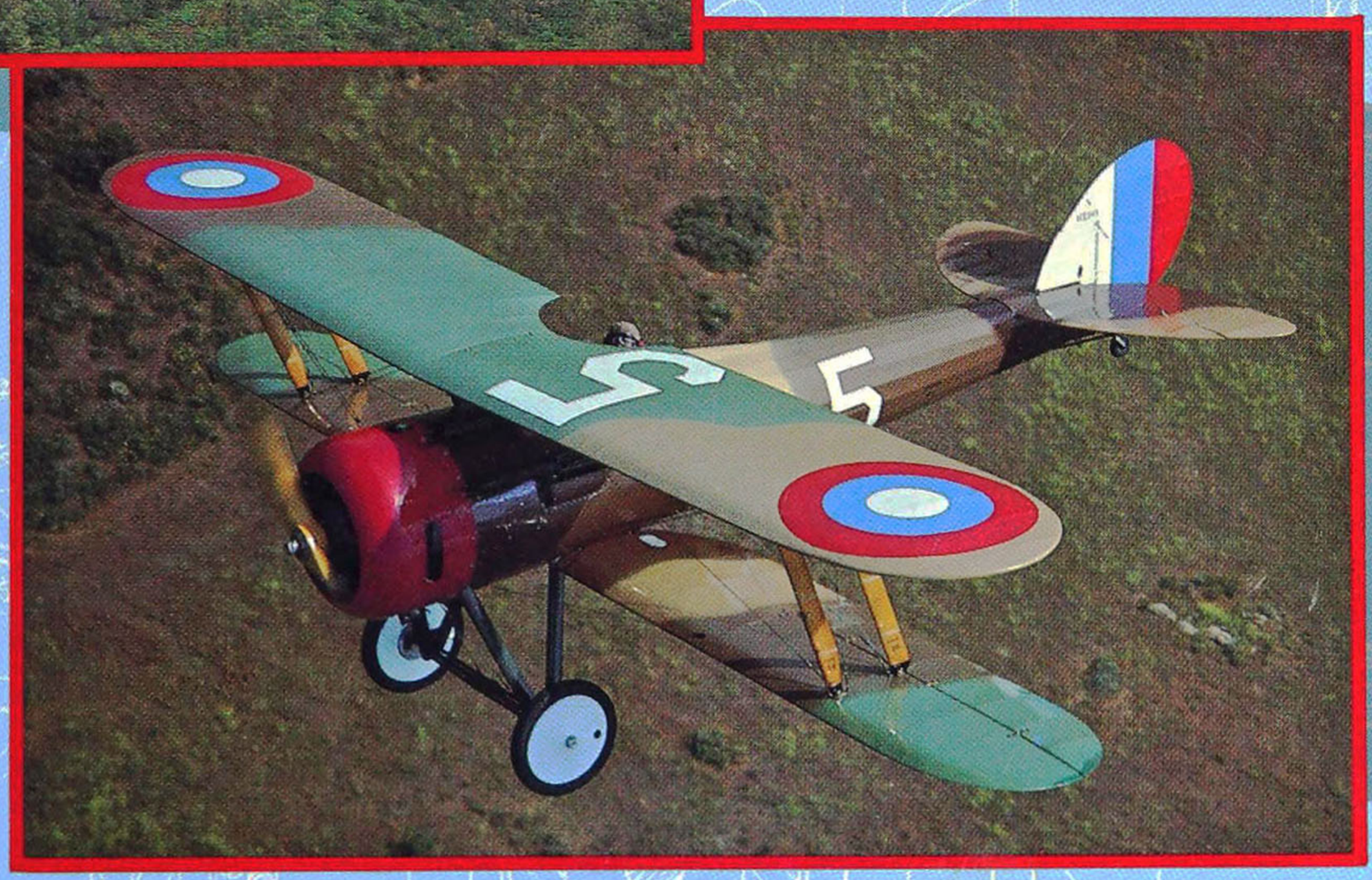

Scale Aircraft Drawings

Volume 1—World War I

Second Printing—1989
Copyright ©1986 by Air Age, Inc.
ISBN: 0-911295-02-X

All rights reserved, including the right of reproduction in whole or in part in any form. This book, or parts thereof, may not be reproduced without the publisher's permission.

Published by Air Age, Inc.
251 Danbury Road
Wilton, CT 06897

Manufactured in the United States of America
This book was designed by Alan J. Palermo.

Publishers: Dr. Louis V. DeFrancesco, Yvonne M. Micik, and Louis V. DeFrancesco, Jr.
Editor: Dan Santich
Managing Editor: Mary Hennessy
Editorial Assistant: Karen Lindsay
Cover photos by Budd Davisson.

ACKNOWLEDGEMENT: The publishers wish to express their sincere gratitude to the following: *Jane's All the World's Aircraft; Jane's Encyclopedia of Aviation;* The American Aviation Historical Society; The Smithsonian Institute; Leonard Opdycke, WW I Aeroplanes, Inc.; Acme Photo Service; Garden City Press; Arco Publishing Co. Inc.; The Society of World War I Aero Historians; The Wright Bros. Historical Foundation; Silver Hill Aviation Museum; Air Force Museum; Naval Air Museum; Boeing Aircraft Corp.; The Curtiss-Wright Aircraft Corp. and Curtiss Museum; Paris Air and Space Museum.

Contents

Introduction 6

AIRCRAFT

Albatros D.I to D.VI 7
Ansaldo SVA-1 12
Antoinette VII 14
Armstrong-Whitworth F.K. 8 16
Bleriot XI 18
Boeing MB-3A 20
Bristol F2B Fighter 22
Chance Vought VE-7, VE-9, & UO-1 .. 27
Curtiss Jenny JN-4—JN-6H 32
Curtiss Model D 37
deHavilland D.H. 1 39
deHavilland D.H. 4 43
Fokker Dr.I Triplane 48
Fokker D.VII 51
Fokker E.V/D.VIII 56
Hansa-Brandenburg C.I 61
Hansa-Brandenburg W.29 64
Junkers D.I 67
Loening M-8 69
Nieuport Nighthawk 72
Pfalz D.III 75
Pfalz D.XII 80
RAF S.E.5a 85
RAF S.E.5a Squadron Markings 89
Salmson Bomber 2 A.2 91
Siemens-Schuckert D.IV 94
Sopwith Camel 98
Sopwith Dolphin 5F.1 102
Sopwith Snipe 7F.1 107
Spad S.VII C.1 110
Spad S.XIA-2 114
Spad S.XIII C.1 119
Standard J-1 123
Thomas Morse S-4B, C, & E 126
Wright 1903 Flyer, Model A,
& Model B 131

ENGINES

Clerget 136
Hispano-Suiza 138
Mercedes 160hp & 180hp 141
Siemens-Halske 144

ARMAMENT

Lewis Machine Gun 146
Vickers Machine Gun 148
Air Bombs 150

INTRODUCTION

by DAN SANTICH

The time-scale of this book represents the period in history when aviation was born. There were no rules. In many cases pilots were self-taught and their airplanes were handmade creations of fabric, wood, and dreams. Pilot comfort was not a pressing issue, and airports to operate from were a long time in coming.

Most of the aircraft presented in this book are only memories: scraps of fabric and wire that one time filled the sky with ambition and heroics. The photographs are all authentic; they represent a relatively new idea for the era—aviation photography.

A scale model is only as good as the effort that went into the research of it. There is, in absolute terms for scale modelers, no substitute for a dimension. A measurement of a given dimension of a given part of an aircraft is one of the most valuable aids to a scale project. With that dimension, a conversion to inches is a simple matter of mathematics. If it isn't given, it's only a guess.

These drawings are of both historical and artistic interest, and are what are generally referred to as Master Drawings.

This book is dedicated to the doer and the dreamer, the armchair pilot and the Captain of tomorrow's spaceship. It's history in black and white. The drawings presented herein are the works of master illustrators, such as Wylam, Nye, Larsen, Karlstrom, and others. It was a massive effort, and the drawings reflect countless hours of research and digging through the halls of history. In some cases, measurements were taken from the actual aircraft. In many cases there were no remaining examples of the aircraft. Obtaining the accurate dimensions of these aircraft was difficult, if not impossible. Where factory drawings and sketches were available, many differences in dimensions were found. To resolve this dilemma, a best-guess approach was used. But it was an educated guess.

Some errors, a few major and some minor, are noted in the text. Modelers and enthusiasts should check them carefully against available photographs before undertaking major projects. A lot of technical material has been uncovered in the last 30 years that was not available to these draftsmen.

It should be noted that the scale reference given in the title block of each drawing does not reflect the scale size of that drawing. All of the drawings in this book have been reduced for presentation and are available from us in their full-size to the appropriate scale. These Master Drawings were rendered in varying scales.

For the scale modeler, this book is invaluable. For the historian, it's a collector's dream. For the aviation-minded, modeler or not, it's a fascinating collection of winged history. We hope you enjoy it.

Albatros D.I to D.VI

drawings by WILLIAM WYLAM

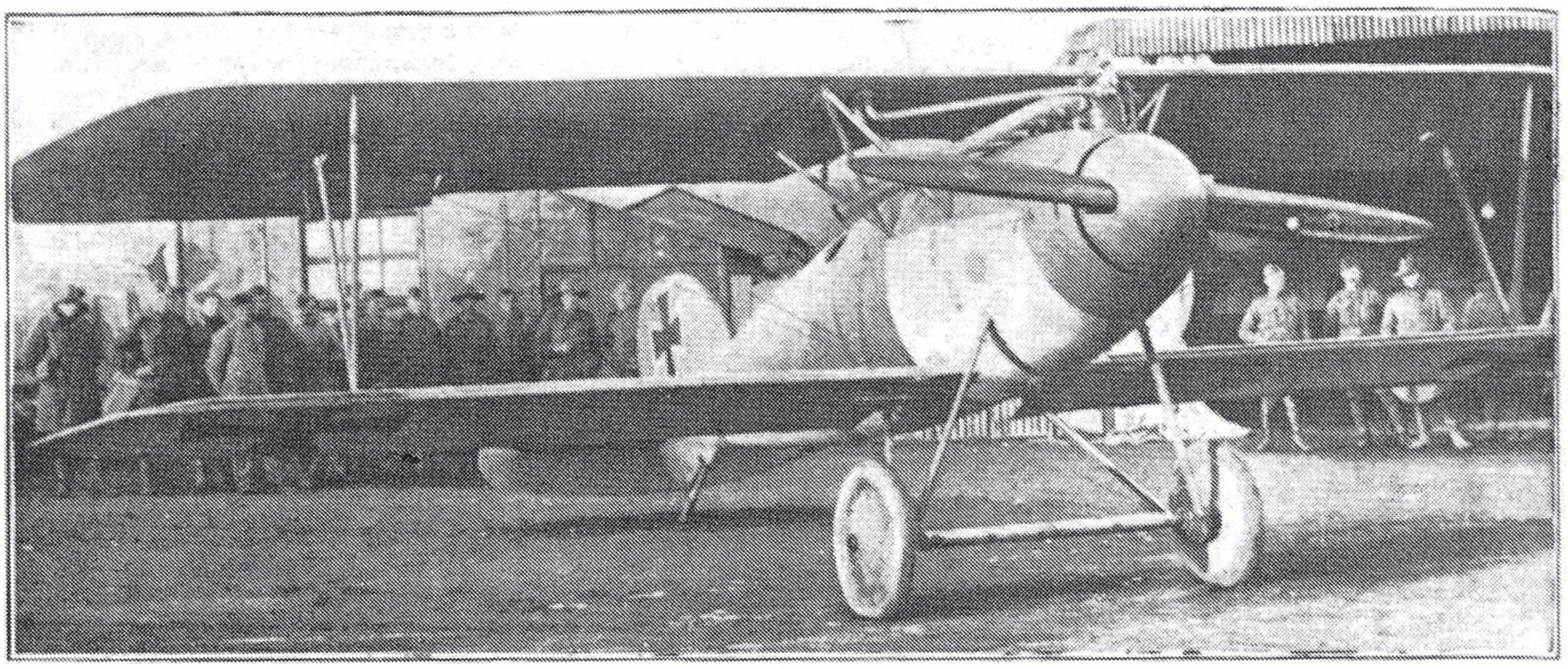

Front view of the Albatros D.V. "Jane's All the World's Aircraft" photo.

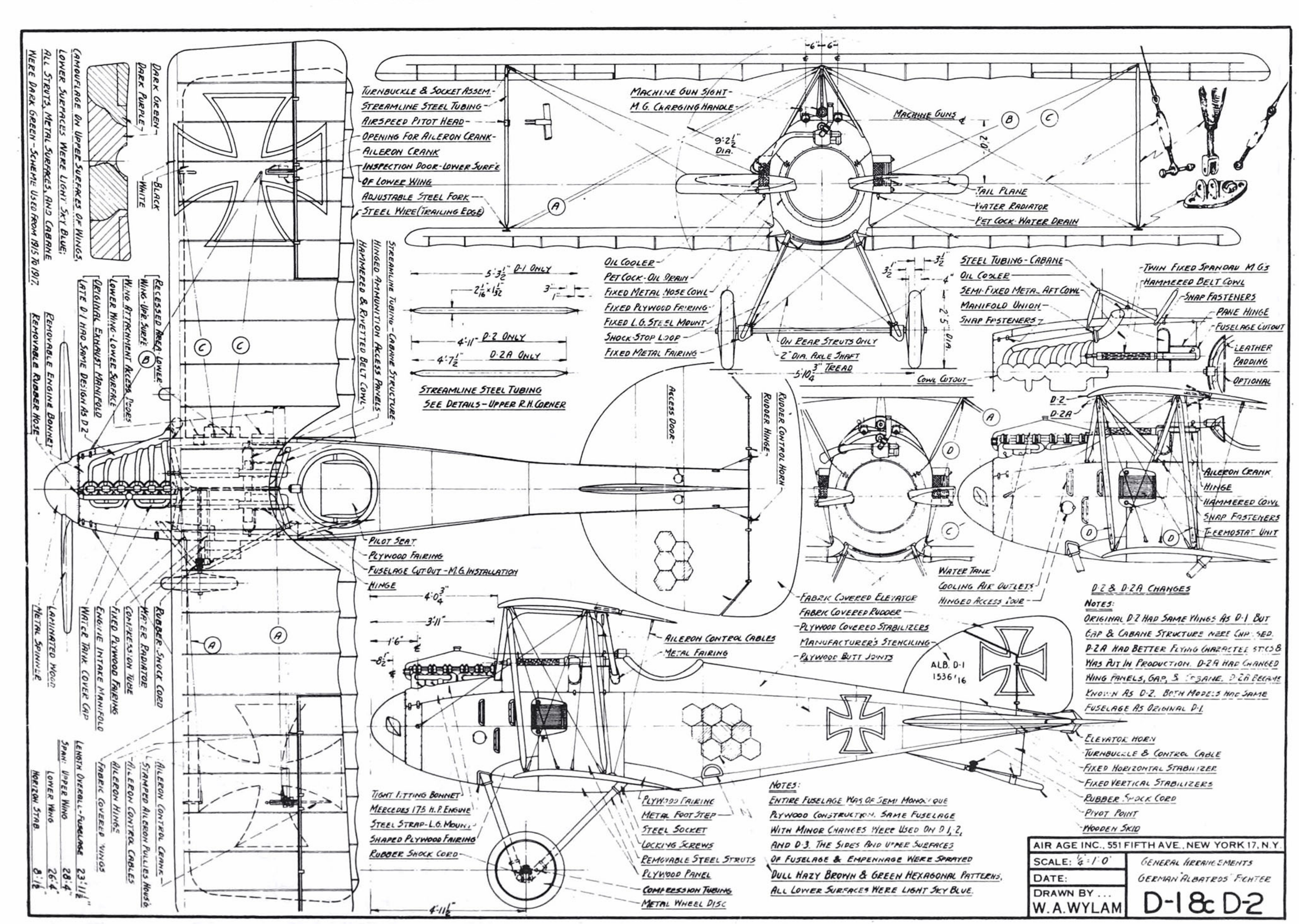

Albatros D.I to D.VI

THE ALBATROS was introduced in April 1916 by the Albatros Werke, a manufacturing plant and civil flying school with excellent aero credentials, in the town of Johannisthal near Berlin. The Albatros was the mainstay of German airpower during the entire first world war, although it was outclassed by faster British and French aircraft later in the war. The Albatros D.I made its combat debut on September 17, 1916, against an ill-fated flight of seven British F.E.2b pushers, resulting in the loss of five of the pushers and no loss to the Germans.

The D.1 immediately made every other fighter aircraft at the front obsolete. Development continued, however, which ended with the D.XII. The combat career of the Albatros did not end with the closing of WW I, but went into Polish and Czechoslovakian units. Two survive, both D.Va's; one at the National Air & Space Museum, the other in Australia. □

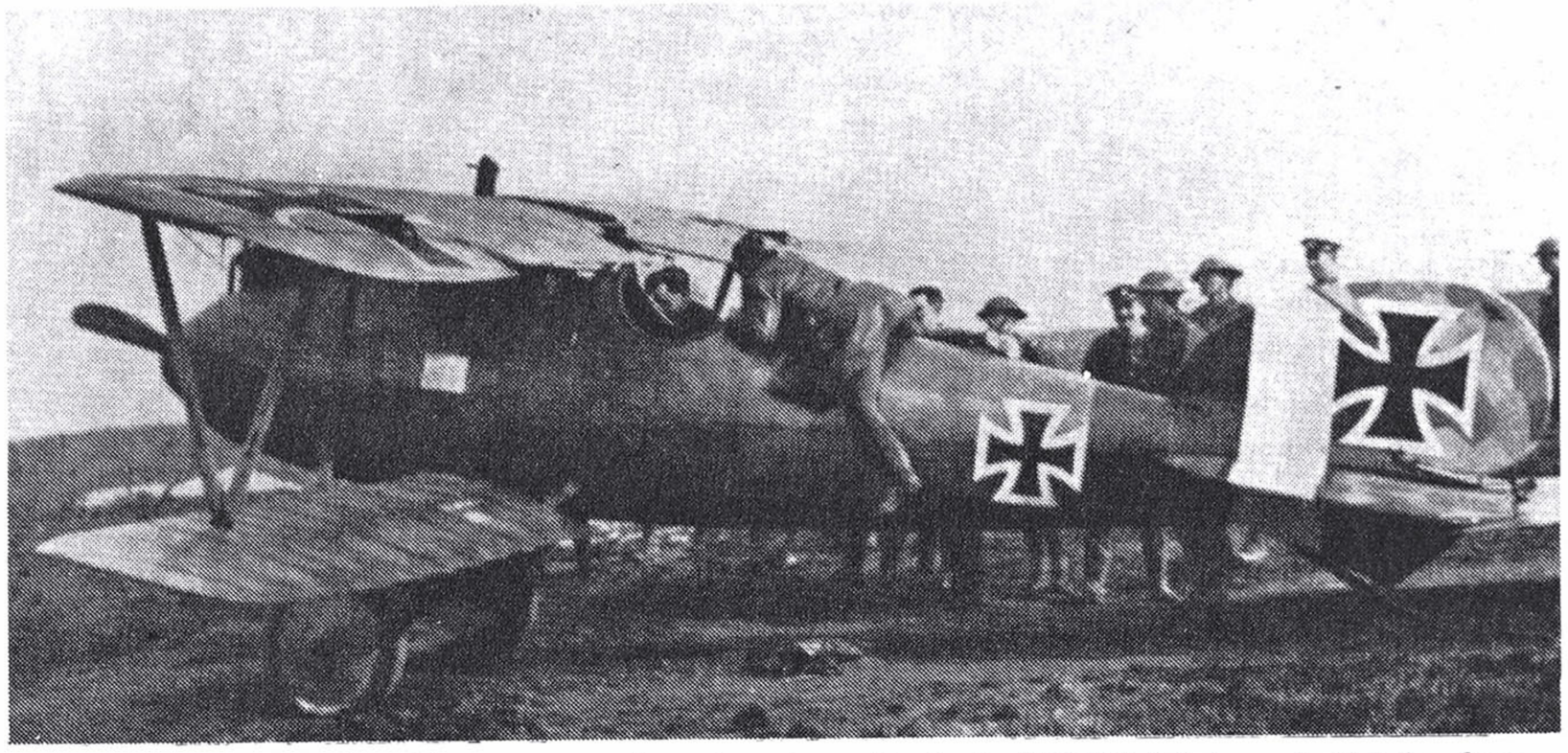

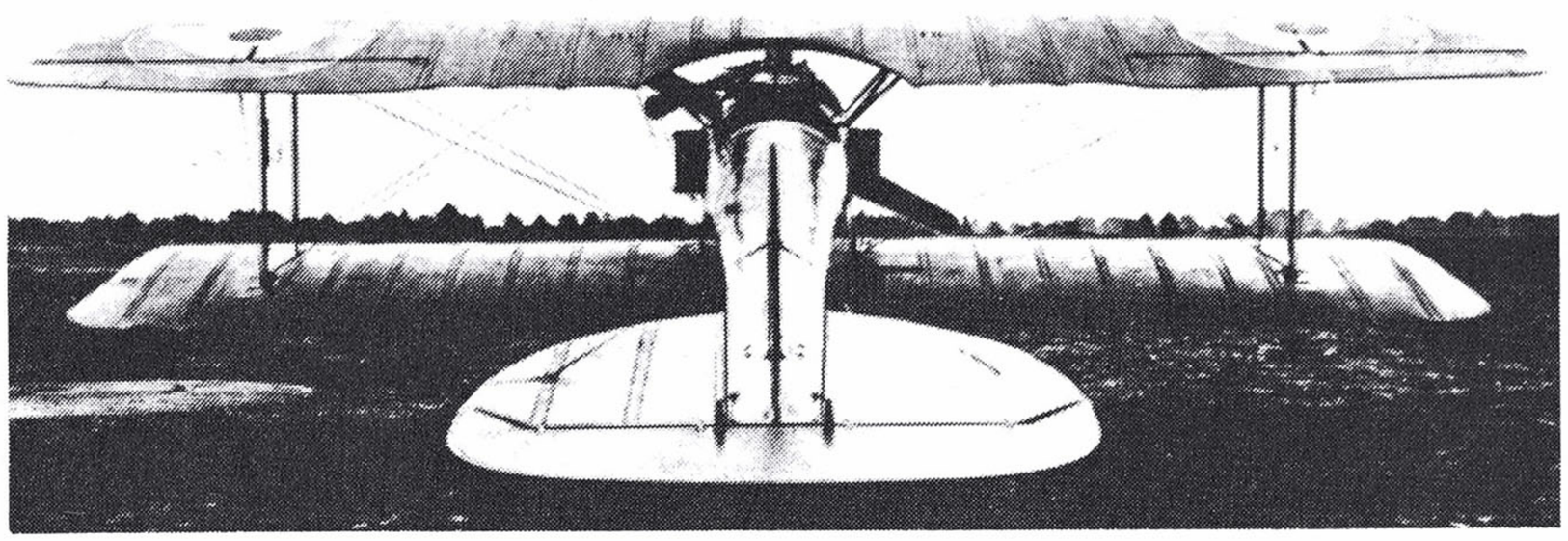

Above: A D.Va. The Albatros was a departure from the typical WW I fabric-and-stick fuselage and utilized advanced streamlining techniques for the times. "Jane's All the World's Aircraft" photo. Below: A captured Albatros D.III bearing RAF markings is another example of German streamlining attempts. Squadron/Signal Publications photo.

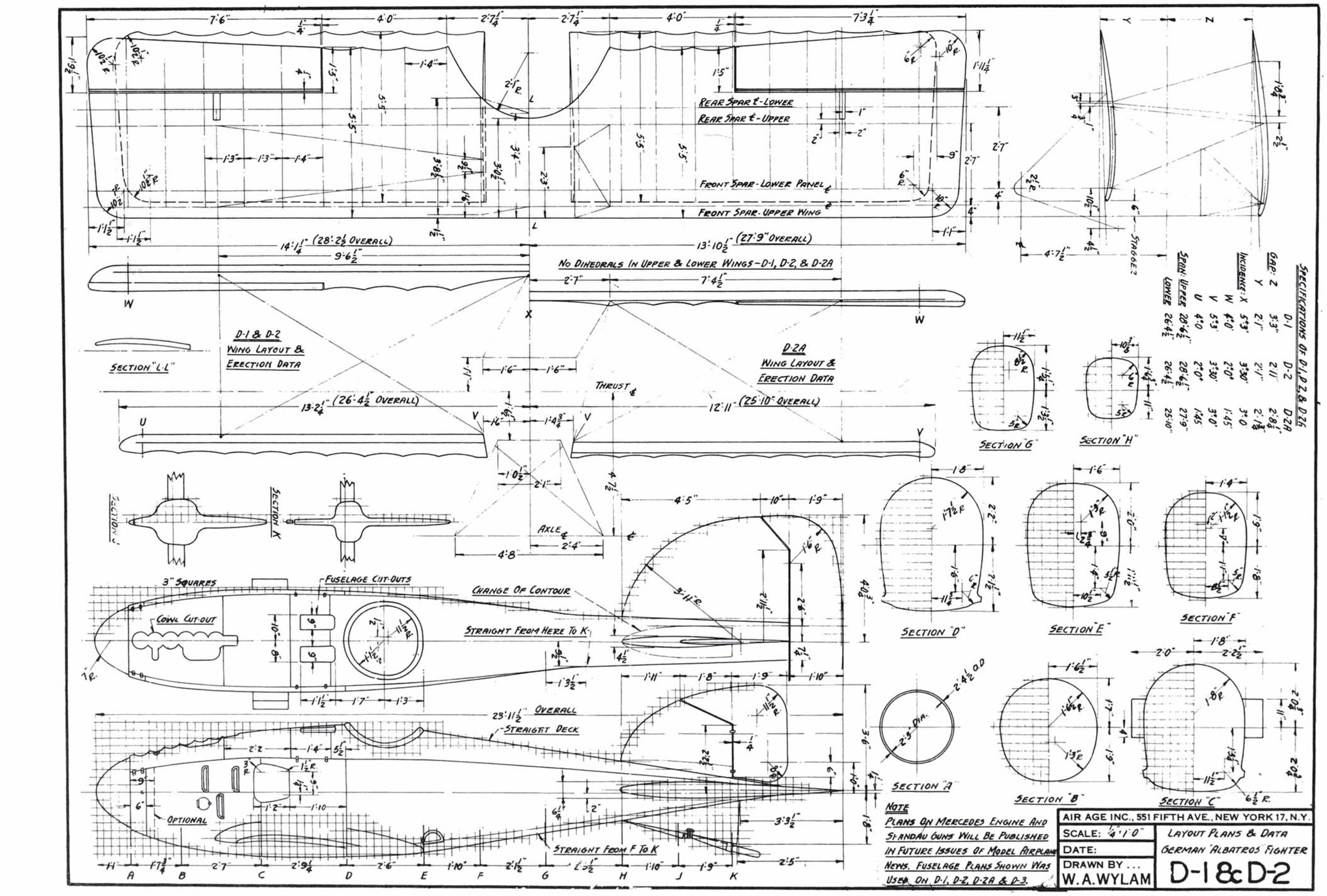

NOTE
PLANS ON MERCEDES ENGINE AND SPANDAU GUNS WILL BE PUBLISHED IN FUTURE ISSUES OF MODEL AIRPLANE NEWS. FUSELAGE PLANS SHOWN WAS USED ON D-1, D-2, D-2A & D-3.

COLOR SCHEME NOTES:
UPPER SURFACE OF WINGS WERE SPRAYED GREEN & PURPLE AS DESCRIBED. ALL LOWER SURFACES WERE LIGHT SKY BLUE. ALL SIDES & TOP VIEW OF FUSELAGE & TAIL CAMOUFLAGE WERE COVERED WITH EITHER REGULAR OR IRREGULAR BLURRED HEXAGONS.

NOTES:
ORIGINAL D-3 HAD WING RADIATOR MOUNTED AT CENTER OF SPAN; IT HAD NO AUX. FUEL TANK. THE ORIGINAL CABANE WAS LOCATED AT "AZ". LATE D-3 HAD REDESIGNED AILERONS - SAME AS D-4's. NO HEADREST WAS USED ON D-3.

STRUT'S ANCHOR PLATE
AIR INTAKE OPENING
AILERON CONTROL CABLES
MACHINE GUNS
"AZ"
HAMMERED PULLEYS HOUSING
D-4 FUSELAGE SECTIONS
H J K L
D-3 & D-4 MANIFOLD
HORIZONTAL STABILIZER
OIL COOLER INTAKE
9'-3" DIA. LAMINATED PROP'R.
SAME WHEELS AS D-1's
JUNCTION - WIRES "C" & "D"
PLYWOOD FAIRING PANEL
STEEL STRAP - L.G. MOUNT
ENGINE COOLANT RADIATOR
ON REAR STRUTS ONLY
HAMMERED HOUSING
5'-10 3/4"
RELIEF VALVE - WATER EXPANSION
EXPANSION RESERVOIR TANK
TANK COVER CAP
1" WATER LINE TO WING RADIATOR
1" WATER LINE TO ENGINE PUMP
LEATHER PADDED COCKPIT
OPTIONAL WINDSHIELD
OPTICAL GUN SIGHT
GUN CHARGING HANDLE
FIXED TWIN SPANDAU M.G.S.
CARBURETOR ACCESS
INTAKE MANIFOLD
THERMOSTATIC UNIT
D-4 CHANGES
OIL COOLER
ENGINE COOLANT RAD.
EXPANSION RESERVOIR
WATER LINE TO PUMP
WATER LINE FROM ENGINE
EXHAUST MANIFOLD
SNAP FASTENERS
SPUN ALUMINUM SPINNER
FABRIC COVERED ELEVATOR
D-4 HEADREST
CHANGE OF CONTOUR
PLYWOOD PANELS
CABANE REINF'MT.
PEEP SIGHT
1" WATER LINE TO ENGINE PUMP
EXPANSION RESERVOIR
1" WATER LINE TO RADIATOR
4'-0 3/4"
3'-11" M.G.
1'-6"
10"
OIL COOLER
ON D-4 ONLY
MANUFACTURER'S MARKS
PLYWOOD BUTT JOINT
PLYWOOD D.1990/16
FABRIC
1'-3"
D-4's VERT. STAB.
D-4's TAIL SKID SAME AS D-3's
BOTTOM VIEW - D-3 VERT. STAB.
NOTES:
D-4 HAD D-3's UPPER WING WITH MINOR CHANGES; THE LOWER PANELS WERE SAME AS D-3. THE LANDING GEAR WAS SAME AS D-1. THE SIDE VIEW (D-4's) WAS SAME AS D-3; PLAN VIEW WAS CHANGED AT SECTION "E" TO ELEVATOR. THE D-1's HORIZONTAL & VERTICAL STABILIZERS (LOWER VERT. STAB. CHANGED) WAS ON D-4.
D-4 FUSELAGE SECTIONS
E F G
HINGED AMMUNITION DOOR
HAMMERED BELT COWL
AUX. FUEL TANK
GRAVITY FUEL FEED LINE
COWL CUT-OUT
INTAKE MANIFOLD
TURNBUCKLES/JUNCTION
CIRCULAR SECTION WIRES
FABRIC COVERED WINGS
STRUT'S ANCHOR PLATE
ACCESS DOOR - LOWER WING
HAMMERED PULLEYS HOUSING
REMOVABLE TOP FUSELAGE BONNET
COUNTER-CLOCKWISE PROPELLER
METAL COWL & SPINNER
OIL TANK ACCESS DOOR
METAL COOLING AIR OUTLETS
PLYWOOD FAIRING PANEL
AILERON CONTROL CRANK
VALVE ACCESS DOOR
AILERON HINGE
OPENING FOR AILERON CRANK
PILOT IDENTIFICATION STRIPES & MARKINGS WERE PAINTED OVER CAMOUFLAGED BACKGROUND; USED BY SPECIAL SCOUT SQUADRONS.
STEEL L.G. SOCKET
PULLEYS/INSPEC. DOOR
STRUT'S ANCHOR PLATE
STEEL TUBING
PRINTED CAMOUFLAGE FABRIC DOPED ONTO PLYWOOD SURFACE
BLACK
WHITE
RED
HINGE
COMPRESSION STRUT
RUBBER SHOCK-CORD
SHOCK-CORD HOUSING
LANDING GEAR STRUT SOCKET
ACCESS DOORS
ACCESS DOOR - ENGINE DRAIN
STEEL STRAP - L.G. MOUNT
OIL TANK VENT
ACCESS DOORS - WING ATTACHMENTS
REAR L.G. STRUT SOCKET
LOWER WING PANEL
BUTTED PLYWOOD FAIRING PANEL
FUEL TANK VENT
D-3 & D-4 BOTTOM VIEW

AIR AGE INC., 551 FIFTH AVE., NEW YORK 17, N.Y.	
SCALE: 1/4" = 1'-0"	GENERAL ARRANGEMENTS GERMAN "ALBATROS" FIGHTER
DATE:	
DRAWN BY ... W. A. WYLAM	D-3 & D-4

14'-9" 29'-6" SPAN - D-5A & D-5B
D-5A & D-5B AILERONS
4'-5" 2'-7 1/2" 3" 7'-0 1/2" 12'-4" 13 EQUAL SPACES = 14 RIBS
1/4" EARLY D-3 ONLY
REAR SPAR
FRONT SPAR
FALSE SPAR - D-3 & D-5
MAIN SPAR - D-3 & D-5
CHORD
2'-6"
14'-10" 29'-8" SPAN - D-3 & D-4
10'-0" D-3, D-4, D-5 SERIES
AILERON CONTROL CABLES
FIXED STAGGER - ALL MODELS
NOTES:
D-3, D-4B & D-5 USED SAME WINGS WITH MINOR CHANGES. D-5A & D-5B's UPPER WING HAD MINOR CHANGES; LOWER WING WAS RE-DESIGNED.
LATE D-3 & D-4
EARLY D-3
SLANTED TO FIT BODY CONTOUR
D-5 SERIES
NO DIHEDRAL ON LEADING EDGES - THE TRAILING EDGE AT "W" WAS RAISED TO CHANGE THE INCIDENCE. SAME SYSTEM WAS USED ON BOTH WINGS OF D-1 & D-2.
HORIZONTAL THRUST

WING SETTING SPECIFICATIONS

	D-3	D-4
GAP: Z	3'-2"	2'-9"
" Y	1'-9 1/2"	1'-9 1/2"
INCIDENCE: X	3°	3°
" - W	1°45'	1°45'
" - V	2°30"	2°30"
" - U	2°30"	2°30"

UPPER WING ATTACH'T. LUG
SLOTTED CENTER FOR LUG
STAGGER ADJUSTM'T. HOLES
1 1/8" = 2 5/8"
ADJUSTABLE EYES
STEEL TUBING
STEEL PLATE
BRACE WIRES ATTACH.
STREAM'D. STEEL
D-1 CABANE STRUCTURE DETAILS
14'-4 1/2" 28'-9" SPAN - D-3 & D-4
WELDED STEEL AILERONS
AILERON CRANK
AUXILIARY SPAR
STEEL WIRE - TRAILING EDGE
LATE D-5's SERIES
14'-3" 28'-6 SPAN - D-5 & D-6
FALSE SPAR (NOT ANCHORED) D-3 & D-5
STEEL COMPRESSION TUBE D-5A & 5B
STEEL DRAG WIRE - D-5A & D-5B
AILERON CONTROL CABLES
PULLEYS FRAME - HOUSING & DOOR
DOUBLE PULLEYS
MAIN SPAR D-3 & D-5
RADIATOR COMPARTMENT
D-5A & D-5B
REAR SPAR
FRONT SPAR
CAT STRIPS - UPPER SURFACE ONLY
SPRUCE RIBS
HOLLOWED WOODEN LEADING EDGE
STEEL TUBING
CABANE REINFORCEMENT TUBING
STREAMLINED STEEL TUBING
ADJUSTABLE FORK
1 1/2" x 2 1/16"
2'-9 1/2" D-3 & 4
2'-7" D-3
2'-2" D-2A
2'-8" D-2
TYPICAL ALBATROS D-2, -3 & -4 CABANE
MAIN CHANGES ON LOWER WING ARE: D-3 & D-5 HAD SINGLE MAIN SPAR & UN-ANCHORED FALSE SPAR; ON D-5A & D-5B, DOUBLE ANCHORED MAIN SPARS WITH INTERNAL WIRE TRUSSS
LATE D-3, D-4, D-5 SERIES
UPPER & LOWER WING DETAILS
REINFORCED FRAME
WOOD HINGE BLOCK
STEEL STRAP - HINGE
AUXILIARY SPAR
SLANTED RIB
AILERON CONTROL CABLES
DOUBLE PULLEYS
TYPICAL ALBATROS CONSTRUCTED RIB
10% 20 30 40 50 60 70 80 90 100
8%
OF CHORD
TYPICAL ALBATROS AIRFOIL - 1915 TO 1917
D-1 & D-2 UPPER & LOWER WING DETAILS
NOTES:
"V" STRUTS ON D-3 TO D-5's WERE MOUNTED TO MAIN SPARS; ON D-5A & D-5B, "V" STRUTS WERE MOUNTED ON COMPRESSION TUBES IN LOWER WING PANELS.

AIR AGE INC., 551 FIFTH AVE., NEW YORK 17, N.Y.	
SCALE: 1/4 & 1/2 = 1'-0"	WING LAYOUTS & DETAILS GERMAN "ALBATROS" FIGHTER
DATE:	
DRAWN BY ... W. A. WYLAM	D-1 TO D-5

THESE TWO GUNS WERE 6" FORWARD

D-5B & D-6 OPTIONAL MACHINE GUNS INSTALLATION

TANK FILLER CAP
EXPANSION RESERVOIR
COOLING AIR INTAKE
EXHAUST MANIFOLD

OPTIONAL SPINNER
MACHINE GUN TROUGH

OPENING FOR AILERON CRANK
AILERON BELL CRANK
ANCHOR PLATES

CABANE REINFORCEMENT
THERMOSTATIC SHUTTER PANEL
1-50 RADIATOR HONEYCOMBING

D-5's & EARLY D-5A AILERON CONTROL

EXPANSION RESERVOIR TANK
AIR INTAKE - WING RADIATOR
EXHAUST MANIFOLD
THERMOSTATIC SHUTTER PANEL
EARLY D-5A BRACING

REAR VIEW MIRROR
THERMOSTAT - OIL COOLER
INTAKE MANIFOLD

9'2" DIA XIAL LAMINATED WOOD PROPELLER
ANTI-FLUTTER BRACE WIRE
ANTI-FLUTTER STRUT

CABANE DETAILS

JUNCTION-WIRES "F" & "G"
PLYWOOD FAIRING PANEL
AIR INTAKE - OIL COOLER
METAL COWL & SP'NNER
SAME WHEELS AS D-1's
HAMMERED HOUSING
SPIRAL SHOCK-SPRINGS
FIXED SUB-WING PANEL
ON LATE D-5A & ALL D-6's
CABANE STRUTS
HAMMERED HOUSING
ANCHOR PLATE

THE LANDING GEAR'S SUB-WING WAS BUILT IN TWO HALVES; FRONT & REAR HALVES. THE FRONT HALF IS FIXED TO THE AXLE WHILE THE REAR HALF WAS FIXED TO THE COMPRESSION TUBE.

5'7½" TREAD
2" DIA AXLE
ELASTIC SHOCKCORD - D-5 ONLY
ELEVATOR HINGE
FABRIC COVERED ELEVATOR
D-6's HORIZONTAL STABILIZER
PLYWOOD PANELS
ELEVATOR CONTROL HORN
PUSH PULL ELEVATOR CONTROL TUBE
ON LATE D-5A & ALL D-5's
INSPECTION DOORS
CHANGE OF CONTOUR LINES
LATE D-5A & D-6's AILERON HORN
TRANSPARENT WIND BREAK
LEATHER COVERED PADDING
PLYWOOD HEADREST (OPTIONAL)
PLYWOOD BUTT JOINTS
WHITE
BLACK

BOTTOM VIEW

OIL TANK VENT
ACCESS PANEL - OIL DRAIN
ACCESS PANELS - WING ATTACHT.
SPIRAL SHOCKSPRINGS
PUSH PULL ELEVATOR TUBE

D-3's RUDDER & FIN

D5176

PLYWOOD
D5029
FABRIC

D-5's FUSELAGE
D-4's VERTICAL STABILIZER
D-3's CONTROL HORNS
D-4's TAIL SKID

D-5's REAR DETAILS

CHANGE OF CONTOUR
ELASTIC SHOCKCORD
HICKORY TAIL SKID
CONICAL CROSS SECTION
PIVOT POINT

D-5A

RELIEF VALVE
EXPANSION RESERVOIR
1" WATER LINE TO RADIATOR
1" WATER LINE TO PUMP
CABANE REINFORCEMENT
REAR VIEW MIRROR
JUNCTION - WIRES "F" & "G"
2 OR 3 M.G.'S
EXTRA 2 M.G.'S
SIGHT

ACCESS DOORS
METAL COOLING AIR OUTLETS
ANTI-FLUTTER STRUT
PLYWOOD FAIRING PANEL
LATE D-5A'S HORN
REAR SPAR ℄
ACCESS DOOR-TIRE VALVE
D-5A'S SUB-WING

SPANDAU MACHINE GUNS
HAMMERED BELT COWL
FIXED PLYWOOD DECK
SEMI-FIXED METAL COWL
REMOVABLE ENGINE BONNETS
JUNCTION-WIRES "F" & "G"
STREAMLINE STEEL TUBING

D-5B & D-6 STANDARD MACHINE GUNS INSTALLATION

NOTES:
D-5B IS SAME AS D-5A WITH CHANGES MADE ON THE ARMAMENTS & ENGINES. D-6 IS SAME AS D-5B WITH CHANGES MADE ON HORIZONTAL STABILIZER AS SHOWN IN PLAN VIEW. D-6A IS SAME AS D-6 EXCEPT IT HAD TWO MACHINE GUNS, SAME ENGINES AS D-5A; & IT WAS A TRIPLANE.

AIR AGE INC., 551 FIFTH AVE., NEW YORK 17, N.Y.	
SCALE: ¼" = 1'0"	GENERAL ARRANGEMENTS GERMAN "ALBATROS" FIGHTER
DATE:	D-5 & D-6
DRAWN BY ... W. A. WYLAM	

FRONT LANDING GEAR STRUT'S STEEL STRAP FUSELAGE MOUNT & SOCKETS (ON D-1 TO D-4 ONLY)

1¼" DIA COMPRES. TUBE

STEEL STRAP
STRUT SOCKET
SCREW LOCK
DETACHABLE STRUT

TYPICAL SHOCK CORD DETAILS (ON D-1 TO D-5)

SHOCK-STOP LOOP
SHOCK CORD
COMPRESSION TUBE
2" DIA. AXLE

REAR STRUT SOCKET (ON D-1 TO D-6A)

ANCHOR PLATE
STRUT SOCKET
BALL SOCKET
LIGHTENING HOLES
FRONT STRUT SOCKET ON D-5 & D-6's SERIES
SAME WITHOUT TURNBUCKLE

WING SETTINGS & SPECIFICATIONS (REFER TO MAY 46 M.A.N, PAGE 29)

		D-5	D-5A	D-5B	D-6	D-6A (TRIPLANE MODEL DR.1)
GAP:	Z	2'9"	2'7½"	2'6½"	2'6½"	
	Y	2'1½"	2'1½"	2'1½"	2'1½"	
INCIDENCE:	X	3°	3°	3°	3°	
	W	1°45"	1°45"	1°45"	1°45"	
	V	2°30"	2°30"	2°30"	2°30"	
	U	2°30"	2°30"	2°30"	2°30"	
CHORD	UPPER WING	4'10"	4'10"	4'10"	4'10"	
	LOWER WING	3'7¼"	3'7¼"	3'7¼"	3'7¼"	
MACHINE GUNS		2	2	3 OR 5	3 OR 5	2
MERCEDES ENGINE		160 H.P.	220 H.P.	220 H.P.	260 H.P.	220 H.P.
BENZ ENGINE			200 H.P.	200 H.P.	200 H.P.	200 H.P.

NOTE
LOWER WING CHORD OF LATE D-3, D-4 TO D-6 WAS 3'7¼". THE CHORD 3'10" WAS ON EARLY D-3's AND SOME LATE D-3's.

STEEL STRAP L.G. MOUNT (FRONT STRUTS ONLY)
TURNBUCKLE ASSEM. REAR STRUTS ONLY
VERTICAL THRUST
HORIZONTAL THRUST
WHEELS ℄
WELDED & FLARED END PLATE (SLOTTED TO HOLD SHOCKCORD)

D-1 TO D-4 LANDING GEAR LAYOUT

D-5 TO D-6A LANDING GEAR LAYOUT

STREAMLINED STEEL TUBING
SHOCK-STOP LOOP
SHOCKCORD SLOT

D-1 TO D-4 LANDING GEAR LAYOUT

BEARINGS
SPOKES
SHOCKCORD GUARD (ON D-1 TO D-5)

ON D-5A TO D-6A (DR.1)
SAME WHEELS AS D-1's.

D-3's & D-4's WHEELS IN SAME POSITION AS D-1, D-5 SERIES & D-6 SERIES' WHEELS IN SAME POSITION AS D-5A's.

SECTION A-A (BUILT-UP PANEL & FITTED TO NON-ROTATING AXLE)
FRONT HALF
REAR HALF

D-5 & D-6A (DR.1) HORIZONTAL STABILIZER LAYOUT

SAME ELEVATOR ON D-5 SERIES & D-6

D-5 SERIES HORIZON STAB. LAYOUT

TIGHT FITTING ENGINE COWL CUT OUT - REMOVABLE IN 2 SECTIONS

FUSELAGE CUT OUT

NOTES
D-5 SERIES & D-5 SERIES USED SAME FUSELAGE SHOWN HERE — THE ONLY CHANGE IS THE HORIZONTAL STABILIZER ON THE D-6's

ALL SQUARES ARE 3"

23'11½" OVERALL LENGTH

JUNCTION WIRES "F" & "G"

NOTE:
REFER TO MAY 1946's MODEL AIRPLANE NEWS FOR LAYOUT & DETAILS ON THE WINGS

AIR AGE INC., 551 FIFTH AVE., NEW YORK 17, N.Y.	
SCALE: ¼" = 1'0"	LAYOUT PLANS & DATA GERMAN "ALBATROS" FIGHTER
DATE:	D-5 & D-6
DRAWN BY ... W. A. WYLAM	

(A)

Connection From Thermostat
Rudder Control Cable
Empty Shell Box
Ammunition Box
Empty Belt Box
Pullies "H"
Pullies "G"
Elevator Control Cables
Compass
Adjustment Holes - Seat
Support Bar - Seat
Pullies "K"
Push-Pull Cable Control System
D-1 To D-5 Elevator
Rudder Horn
Pullies "J"
Rudder Control Cable
Elevator Control Cables
Oil Line To Pump
Oil Tank Vent
Oil Line From Cooler
Thermostat Housing
2 Stage Air Pump
Oil Line To Oil Cooler
Oil Cooler
Flexible Gun Control
Engine Throttle
Pet Cocks - Fuel Lines
Aileron Control Cables
Control Column Tube
Rudder Bar
Ammunition & Empty Belt Boxes
Empty Shell Box
Plywood Panel
Altimeter
Strap
Hinge Block
Typical Albatros Hinge Detail
Oil Cooler
D-1 To D-5 Rudder
Pullies "J"
Rudder Horn
Pullies "K"
Rudder Control Cable
Elevator Control Cables
Oil Tank Vent
Pressure Release Lines
Rear Spar - Upper Wing
Empty Belt Box
Ammunition Box
Pullies "G"
Pullies "H"
Elevator Crank
Pullies "A"
Pullies "C"
Pullies "D"
Compass
Cover Cap - Aux. Fuel Tank
Tank Mounting Band
Shoulder Strap
D-5A To D-6 Rudder
Push-Pull Tube
Bell Crank
Push-Pull Tube - Elevator
Push-Pull Tube - Rudder
Plan View - Aileron Horn
Aileron Horn
Push-Pull Tubes Control System
Empty Shell Chutes
Cover Cap - Tank
Cable Hole
Pullies "B"
Pullies "C"
Altimeter
Hand Grips - Control Column
Throttle
Cover Cap - Aux. Fuel Tank
Wood Seat Mount
Late D-5 & D-5A To D-6 Rudder
Plywood Support Panel
Aux. Fuel Tank (Optional)
Pressure Release Lines
Compass
Push-Pull Tube - Rudder
Push-Pull Tube - Elevator
Pullies "G"
Pullies "H"
Albatros Control System
(Minor Changes On Push-Pull Tube Control System)

Welded Steel Structure
Hinge Block - Wood
Auxilliary Fuel Tank
Cover Cap - Tank
Empty Belt Box
Ammunition Box
Empty Shell Box
Plywood Panel
Airspeed
Charging Handle - Machine Gun
Altimeter
Pressure Gauge - Fuel Tanks
Pet Cock - Fuel Tank Pressure Release
Tachometer
Flexible Gun Control
Fuel Air Line
Main Fuel Tank
Elevator Horn
Empty Shell Chutes
Ammun. Box
Pullies "F"
Aileron Cables
Empty Belt Box
Elevator Lock
Rudder Bar
Pivot Point
Pullies "A"
Pullies "B"
Cover Cap
Pullies "C"
Engine Controls
Safety Straps
Compass
Fuselage Longeron
Access Door
Main Fuel Tank
Elevator Horn
Fuselage Bulkheads Omitted For Clarity
(A)
Leather Band
Alum. Foot Plate
Tank Mount
Empty Shell Bay
(B)
Pullies "D"
Bearing Block
Pullies "E"
Ball Joint
Aux. Fuel Tank (Optional)
Pullies "A"
(C)
Seat Bolts
Plywood Panel
Support Band
Pullies
Leading Edge
Aileron Control Cables In Lower Wing
Control Column
Pullies "E"
Aileron Control Cables In Upper Wing
Pullies "D"
Control Column Cable Diagram
Leather Padded Grips
Polished Steel Tubing
Welded Pivot Rod Plates
Rudder Control Cables
Alum. Foot Plate
Rudder Bar
Machine Gun Controls
Sliding Collar
Pivot Point (All 4 Corners)
Elevator Lock
Elevator Crank
Double Pullies "E"
Control Column Pivot
Elevator Cables
Rudder Cable
Support Bearings
Pivot Point
Collar Slides Up & Down When Unlocked
Screw Type Hand Elevator Lock
Aileron Cables
Pivot Point
Double Pullies "E"
Steel Tubing

AIR AGE INC., 551 FIFTH AVE., NEW YORK 17, N.Y.
SCALE: 1/4" = 1'-0"
DATE:
DRAWN BY ... W.A.WYLAM
Fuselage Interior Details
German "Albatros" Fighter
D-1 TO D-6

On D-1 To D-3, Sections "K" & "L" Forms The Fuselage And Vertical Stabilizer Bulkheads. The Horizontal Stabilizer Was In 2 Panels; Left And Right Hand Units.

Longeron "X"
Plywood Covering
Seat Support Rail
1'-5" 1'-5"
4 1/4" 4 1/4" 4 1/4"
9 1/4"
18 1/2"
1'-2 1/4"
1'-2 1/4"
1'-9 1/2"
1'-2"
Engine Mounting Rails
Longeron "Z"
Longeron "Y"
Cockpit Cut-Out
Longeron "Z"
Longeron "Y"
Longeron "X"
2'-10 3/4"
9 1/2"
1'-4"
9" 1'-10 1/4" 2'-6 1/4" 3'-9 3/4" 4'-11 1/4" 6'-4 1/2" 6'-11 1/2" 8'-2 1/2" 9'-6 1/4" 11'-0 3/4" 12'-7 1/2" 14'-2 3/4" 15'-10" 17'-8 1/4" 19'-5"
A B C D D E F G H J K L

On D-5 Series, Sections "J" & "K" Forms The Fuselage, Horizontal And Vertical Stabilizer Bulkheads.

1'-4"
1'-8 1/2"
9 1/4"
18 1/2"
1'-1 1/2"
1'-1 1/2"
Engine Mounting Rails
Seat Support Rails
2'-7"
11 3/4" 1'-9 1/4" 4 1/2" 3'-11 1/2" 4'-10 1/2" 6'-2 1/2" 6'-11" 8'-2 3/4" 9'-5 3/4" 11'-7" 13'-8 1/4" 15'-9 3/4" 17'-7" 19'-5"
A' B' C' D' D' E' F' G' J' K' L'

Plywood Covering
Typical Albatros Longeron
(Routed Out Between Bulkheads)
L
Plywood Fairing
F G H J K
A B C D E
F' G' H' J' K'
9"
1'-4"
A' B' C' D' E'

Note:
Mr. Robert Campbell Is Correct On Single Spar Details Of Lower Wing Panel; It Beleived That The Spar Centers Shown Were The Location Of Auxiliary Spars. Any Other Errors Properly Will Be Appreciated - W.A.Wylam.

AIR AGE INC., 551 FIFTH AVE., NEW YORK 17, N.Y.
SCALE: 1/4" = 1'-0"
DATE:
DRAWN BY ... W.A.WYLAM
Fuselage Structure Details
German "Albatros" Fighter
D-1 TO D-6

Ansaldo SVA-1

drawing by WILLIS NYE

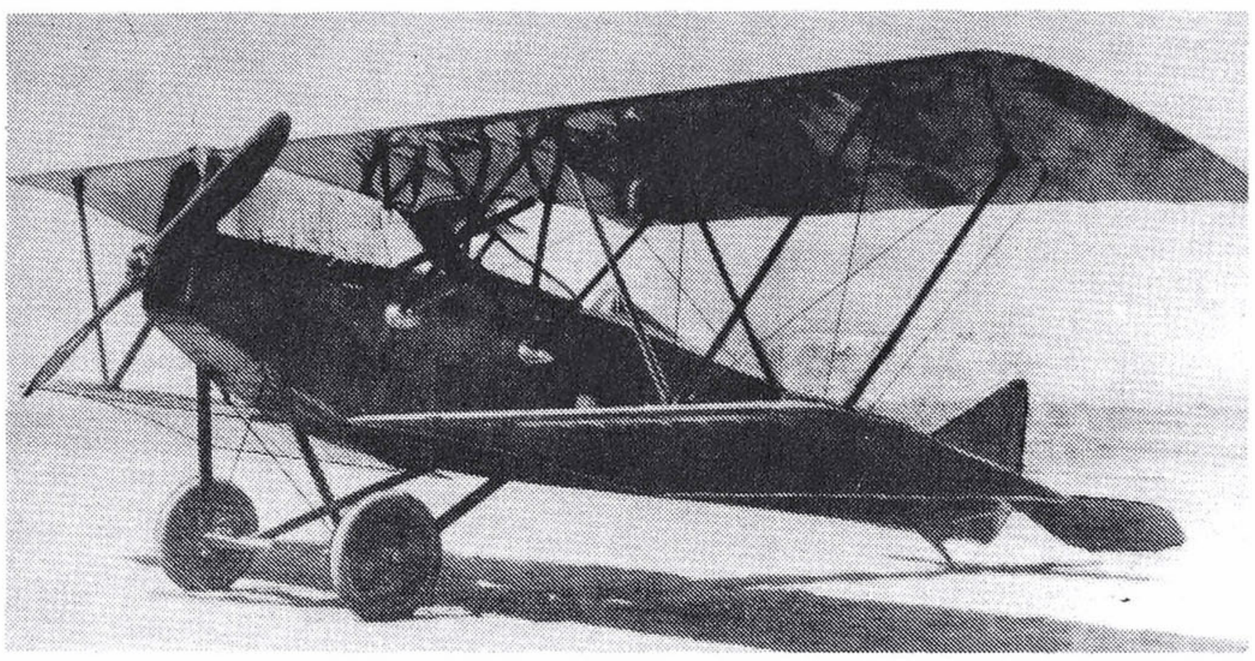

Ansaldo SVA-4 was nearly identical to SVA-1. Note extra strut in center section bracing. Robert Hare photos from Air Age file.

ALTHOUGH little has been written of Italy's contributions during the first world war, the record is an amazing one. Italy's aerodynamicists were numbered among the world's finest, her factories were efficient, and Italian designs were definitely first class.

One of the largest companies was a firm known as "Societa Gio Ansaldo" of Genoa. To guarantee consistent quality, the firm established a testing program virtually unheard of during that period. In-plant testing and inspections were more critical than any contemporary manufacturer had even thought of. From these facilities came the famous S.V.A. series of fighter and bomber aircraft.

Fitted with a six-cylinder, water-cooled vertical-type engine that developed 225 hp at 1,700 rpm, the aircraft was suited to roles of both fighter and bomber. Altogether six models of the basic S.V.A. design are known to have been built, and of these three were exclusively single-seat fighters, two were listed as "escort" types, and one was fitted out as a single-seat bomber. Only the S.V.A.-4 and -5 reached true production status.

Operationally, the S.V.A.-4 and -5 were a distinct success. Nearly all Italian pursuit squadrons were fitted with the fighter version toward the war's end, while four bomber squadrons were entirely -4 equipped. They regularly took on missions of up to 700 miles round trip, which were completed in less than seven hours. Because of their versatility, the -5 fighters were often fitted with bombs for shorter range work and with extra fuel to escort the bombers.

A curious feature of Ansaldo aircraft, as well as other Italian aircraft up through WW II, was that the left-hand wings were *longer* than the right-hand wings to help overcome torque. Most drawings, including Nye's, do not show this.

The S.V.A. team was a formidable weapon deserving of an everlasting place in aviation's Hall of Fame. Seven survive, five in Italy and two in the U.S. □

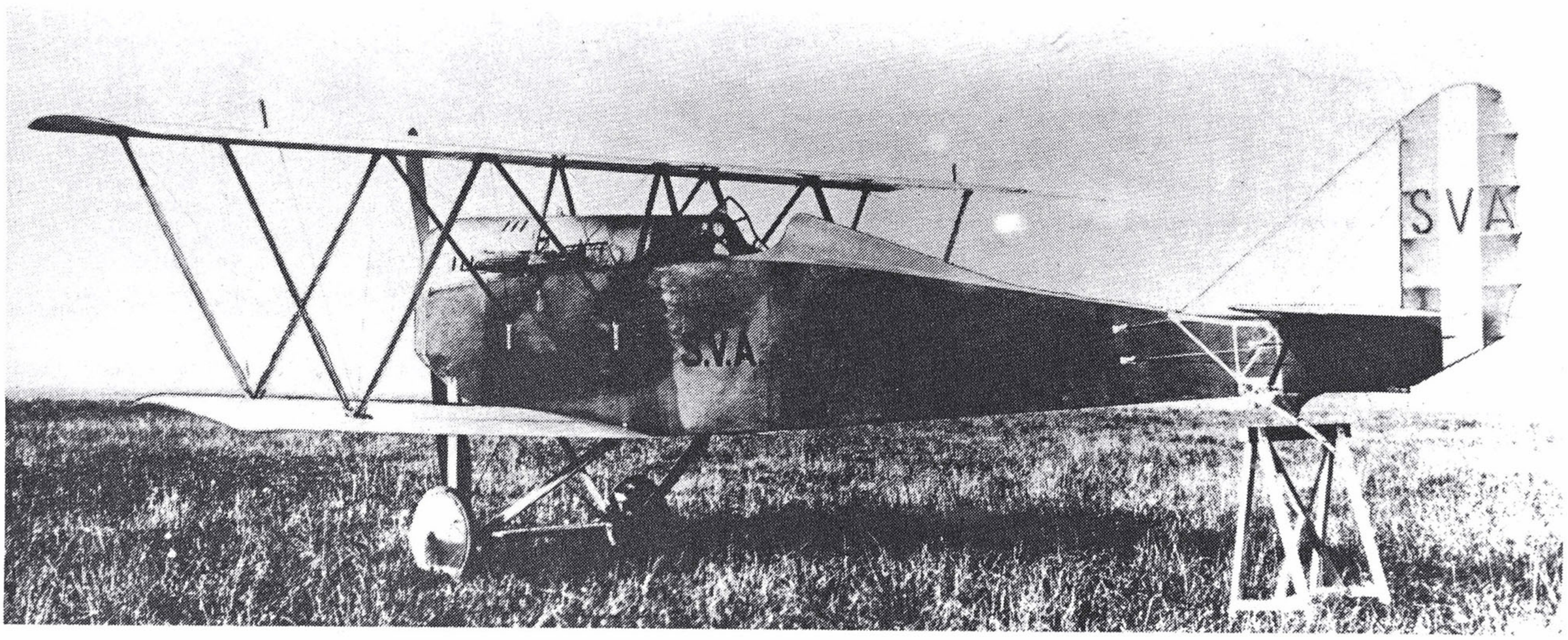

THE ANSALDO SVA-1

TIE

BLUE STRUTS

GAP AT CENTER OF WING IS 5-0"

TURNBUCKLE PIN FITTING

WING SPAN 26'-0"

1.5° DIHEDRAL ANGLE ON LOWER WING ONLY

PLYWOOD WALKWAY
RUBBER SHOCK CHORD
WIRE SPOKE WHEELS
FABRIC FAIRINGS

STREAMLINE STEEL INTERPLANE STRUT

STRANDED STEEL LANDING WIRE

STRANDED STEEL FLYING WIRE

METAL TIP

9'-0" DIAMETER PROPELLER

STREAMLINED STEEL TUBE CROSS BRACE

5'-4"

STRANDED STEEL WIRE BRACE

FITTING TO CONTROL SETTING OF MANUALLY ADJUSTABLE VERTICAL FIN

SILVER FABRIC FINISH ON TAIL SURFACES

STIFFENED PLYWOOD TURTLE DECK

STREAMLINE STEEL TUBE BRACE

LOWER LONGERON

RADIATOR WATER TANK

GRAVITY FEED FUEL TANK

FILLER CAPS

PADDED COAMING

BRASS CORE RADIATOR AND SHELL

WATER FILLER

PLYWOOD BULKHEAD

WOOD FRAME, FABRIC COVERED ELEVATOR

ELEVATOR ACTUATED BY PUSH-PULL TUBE

4'-7"

FUSELAGE FINISH - NATURAL PLYWOOD

HAND GRIP

ALUMINUM PILOT'S SEAT

PUSH-PULL AILERON ACTUATING TUBE BELL-CRANK FAIRING CUT AWAY ON LOWER WING

LAMINATED WOOD PROPELLER

STRANDED STEEL DRAG WIRE

STEEL WIRE TRAILING EDGE

STEEL WIRE SCALLOPED TRAILING EDGE

2'-6"

SINGLE PANEL UPPER WING, MODIFIED EIFFEL AIRFOIL WITH PHILLIPS LEADING EDGE

TORQUE TUBE

ORTHAGONAL BIPLANE CELLULE ZERO STAGGER

FABRIC COVERED TWO SPAR WING FRAMEWORK

WOOD FRAME, FABRIC COVER HORIZONTAL STABILIZER

2'-1"

4'-1"

SCALLOPED TRAILING EDGE

FRONT SPAR

REAR SPAR

WING RIBS

TORQUE TUBE ACCESS PANEL

RED
WHITE
GREEN

CLEVIS TYPE AILERON HINGE

UPPER AILERON TRAILING EDGE SPLAYED AT TIP

SILVER WING FINISH

6'-4"

TURTLE DECK FAIRING

THRUST LINE

FUSELAGE FRAME

FUSELAGE CROSS SECTIONS

LOWER WING OUTLINE

FLEXIBLE TRAILING EDGE

ENGINE EXHAUST STACKS ON RIGHT SIDE OF FUSELAGE. SHOWN IN DASHED LINES SIX STACKS IN-LINE

NORMAL ARMAMENT 2 MACHINE GUNS MOUNTED FORWARD OF PILOT AND SYNCHRONIZED TO FIRE THROUGH PROPELLER

THIS AIRPLANE WAS BUILT BY ITALIAN SAVOIA VERDUZIO FACTORY, GIO. ANSALDO & CO, GENOA, ITALY. THE PLANE WAS NAMED *"THE BALILLA"* IN HONOR OF ITALY'S LEADACE. THE ENGINE WAS 6 CYLINDER IN-LINE TYPE. OVERHEAD VALVES, SINGLE CARBURETOR, 2 MAGNETOS WERE USED ON THIS ENGINE. PLANE EMPTY WEIGHS 1823 POUNDS. GROSS WEIGHT 2367 POUNDS. SEA LEVEL SPEED 165 M.P.H. THIS AIRPLANE POWERED WITH CURTISS D-12, 435 H.P. ENGINE, AND REFITTED WITH FOUR BLADE PROPELLER, EXTERNAL RADIATORS, PLACED THIRD IN 1924 PULITZER TROPHY RACE AVERAGING 149.78 M.P.H. S.P.A. ENGINE DEVELOPED 220 H.P. AT 1600 R.P.M. PLANE LANDING SPEED 45 M.P.H. WING LOADING 9.1 PS. FT. 10.7 LBS PER SQ. FT. POWER LOADING.
CLIMB IN 16 MINUTES IS 16,000 FEET.
CLIMB IN 25 MINUTES IS 20,000 FEET.
ENGINE WEIGHT IS 550 POUNDS DRY.
USEFUL LOAD IS 550 POUNDS.
MAIN FUEL TANK LOCATED IN FUSELAGE FORWARD OF PILOT IS JETTISONABLE. FUEL FOR THREE HOURS AT CRUISING SPEED IS CARRIED.

5'-0"

1'-7"

STRANDED CABLE DRAG WIRES

ALUMINUM ENGINE COWL

BELLCRANK FAIRING

AILERON PUSH-PULL STEEL TUBE ACTUATOR

SEMI-MONOCOQUE PLYWOOD FUSELAGE
PLYWOOD TURTLE DECK

PLYWOOD JOINT
UPPER LONGERON

WOOD FRAME FABRIC FIN

CABLE FAIRLEAD

VERTICAL STABILIZER CUT AWAY TO PERMIT ADJUSTMENT OF HORIZONTAL STABLIZER

WOOD FRAME FABRIC COVER RUDDER STRUCTURE

STRANDED STEEL CABLE

REMOVABLE ACCESS PANEL

3'-4"

4"

8'-8"

5'-3"

REMOVABLE ACCESS PANEL

LOWER LONGERON
STEP
STRANDED CABLE STAGGER WIRES

RED
WHITE
GREEN

RUDDER CONTROL CABLE

TIE DOWN RING

STREAMLINE STEEL TUBE

MANUALLY ADJUSTABLE STABILIZER

SPRING STEEL TAIL SKID

ZERO STAGGER BIPLANE CELLULE
STREAMLINE STEEL TUBE LANDING GEAR STRUCTURE
HIGH PRESSURE TIRE - 26" DIAMETER

AFT FUSELAGE TAPERS TO WEDGE SHAPE AT LOWER LONGERONS

10° LANDING ANGLE

22'-6"

2'-9"

0 1 2 3 4 5
SCALE

W.L. NYE

Antoinette VII

drawing by WILLIS NYE

FROM their motorboat engine factory, Leon Levavasseur and Jules Gastambide began building airplanes in 1903; the first successful design, Model IV, flew in 1908. Herbert Latham used it, much modified, in his first cross-Channel attempt, and the Model VII on his second: both efforts ended in the water. Most of the Antoinette designs were heavily modified: the two photographs on this page, and Nye's drawing, are all of the same machine.

The designs were fast and stable: Latham later flew his Model VII, repaired and dried out, over the Golden Gate Bridge in San Francisco in 1911. He was observed on the occasion by Willis L. Nye, our draftsman.

The firm also built the Monobloc, the first internally-braced low-wing monoplane, in 1910: it was too heavy to fly. Three Model VIIs were lent to the U.S. Navy by Harry Harkness, and two of them appear in photographs of the Curtiss training school at North Island, in California.

Three Antoinettes are left, one in London, one in Paris, and one in Krakow, in Poland. □

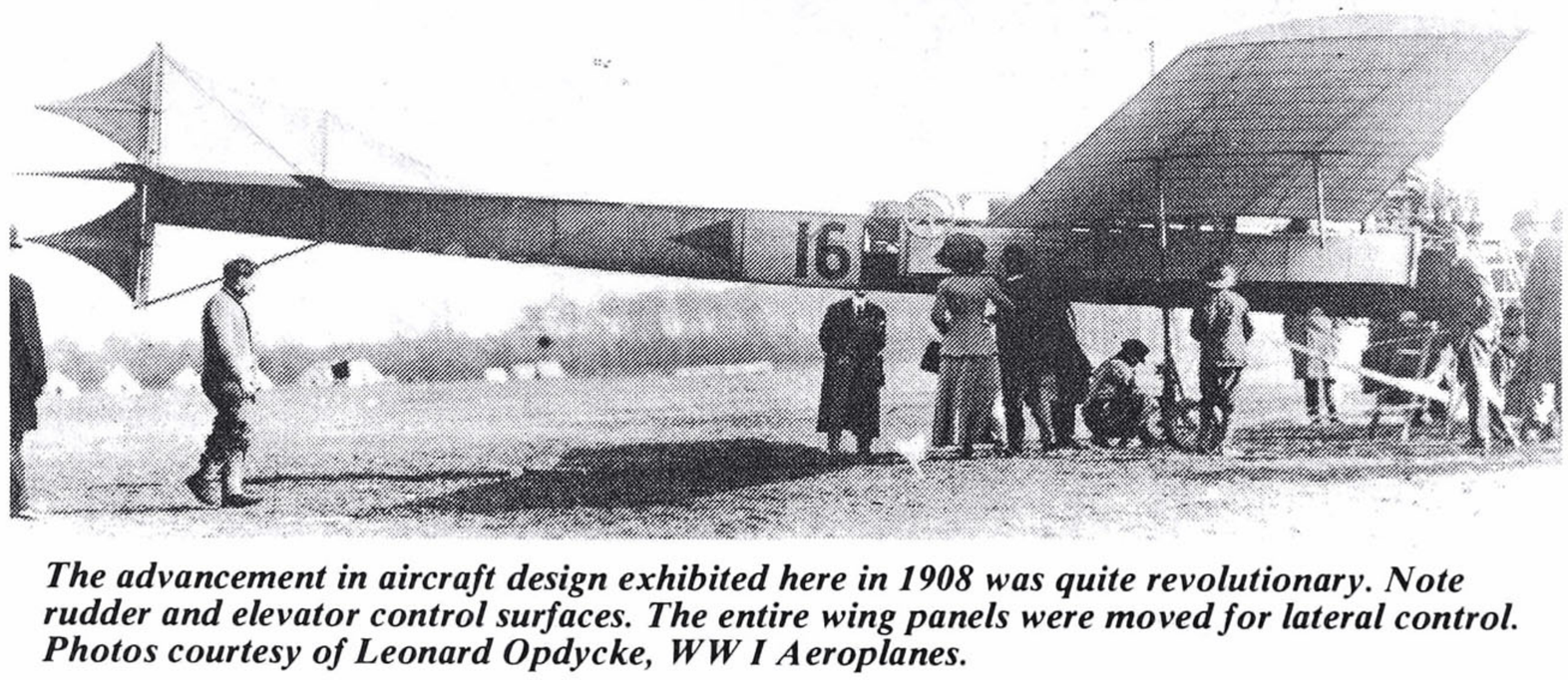

The advancement in aircraft design exhibited here in 1908 was quite revolutionary. Note rudder and elevator control surfaces. The entire wing panels were moved for lateral control. Photos courtesy of Leonard Opdycke, WW I Aeroplanes.

LATERAL CONTROL WHEEL
PILOT'S SEAT
RADIATOR HOSE
RADIATOR HEADER
DIAGONAL BRACE
CONTROL CABLE
10'-3"
5'-0"
3'-0"
STRUT
FABRIC
RIB
HORIZONTAL STABILIZER
RUDDER POST
RIB
CONTROL CABLE
SINGLE SURFACE VARNISHED FABRIC
FABRIC LACING
4'-0"
1'-0"
HINGE
STEEL TUBE
3'-2"
ALUMINUM FAIRING
RUDDER BAR
RADIATOR
ALUMINUM GUSSET PLATES
33'-9" (OVERALL)
BRACE WIRE
(NORMAL TAKE-OFF AND LANDING ATTITUDE)
STRANDED BRACE WIRE
STEEL TUBE
TAIL SKID

THE ANTOINETTE AIRPLANES

THE PROTOTYPE ANTOINETTE MONOPLANE WAS THE ORIGINAL DESIGN OF MR. M. LEVAVASSEUR AND CONSTRUCTED BY MESSRS. GASTAMBIDE AND MENGIN, 1908. THERE WERE 8 DESIGNS BUILT, ALL OF WHICH WERE GOOD FLIERS. DESIGNS NO.4 AND NO.7 WERE THE THE MOST POPULAR TYPE. THESE AIRPLANES WERE DECIDED IMPROVEMENTS OVER EXISTING COMPETITIVE TYPES. HUBERT LATHAM PARTICIPATED AT AVIATION EXHIBITIONS IN THE U.S.A.

THE ENGINES USED WERE OF ANTOINETTE DESIGN OF THE VEE-8 OR VEE-16 AIR PUMP-FED TYPE WITH WATER COOLED CYLINDERS. THESE ENGINES WERE OF ADVANCED DESIGN AND A VERY LOW RATIO OF WEIGHT TO H.P. OUTPUT. THE ENGINE WAS STARTED BY MANUAL CRANKING AND THE PROPELLER WAS COUPLED TO IT. THE RADIATOR WAS OF UNUSUAL TYPE. ENGINE R.P.M. WAS 1200.

THE AIRFOIL, DESIGNED TO ACHIEVE MAXIMUM PENETRATION, PRESENTED GOOD FLYING CHARACTERISTICS. THE WING STRUCTURAL CONFIGURATION RESEMBLES MODERN CONSTRUCTION. THE AREA WAS 50 SQ. METERS YET WEIGHED NOT MORE THAN 30 KILOGRAMS. BOTH SURFACES OF THE WING WERE COVERED WITH VARNISHED FABRIC, RUBBERIZED PERCALE, WATERPROOFED. IT WEIGHED 3 OUNCES PER SQUARE METER.

CLIMBING AND DIVING WERE CONTROLLED BY A CONVENTIONAL TYPE ELEVATOR. STEERING WAS CONTROLLED BY A RUDDER. LATERAL STABILITY WAS ACHIEVED BY A MANUALLY CONTROLLED CABLE ACTUATED CONTROL SYSTEM FOR ROCKING THE ENTIRE WING STRUCTURE, ANGULAR MOTION ABOUT THE LONGITUDINAL AXIS, EACH WING BEING DIFFERENTIALLY. THE WING AND RIB STRUCTURAL ELEMENTS WERE STATICALLY DETERMINATE AND THE JOINTS WERE STRENGTHENED BY WOOD BLOCKS AND ALUMINUM GUSSET PLATES. HOWEVER, THE TAIL SURFACES WERE COMPARITIVELY FLIMSY CONSTRUCTION. MAXIMUM SPEED 55 M.P.H.

THE MODELS I AND II FLEW IN 1908. THE MODEL I USED A QUADRICYCLE LANDING GEAR WITH WING WARPING FOR LATERAL CONTROL. MODEL II WAS SIMILAR EXCEPT A BICYCLE LANDING GEAR AND WING SKIDS WERE USED. MODEL III WAS SIMILAR EXCEPT TRIANGULAR AILERONS WERE USED FOR LATERAL CONTROL. MODEL IV WAS SIMILAR EXCEPT TRAPEZOID SHAPED AILERONS WERE USED. THIS TYPE WAS USED BY HUBERT LATHAM IN HIS FIRST ATTEMPT TO FLY THE ENGLISH CHANNEL. MODEL V WAS SIMILAR TO AND AN IMPROVEMENT ON PREVIOUS AIRPLANES. ON MODEL VI, WING WARPING WAS USED AGAIN AND KING POST TYPE WING TRUSS USED FOR WING BRACING. THE MODEL VII WAS USED BY LATHAM ON HIS SECOND ATTEMPT TO FLY THE ENGLISH CHANNEL. MANY "ANTOINETTE" TYPE MONOPLANES WERE USED BY THE FRENCH ARMY. "ANTOINETTE" ALSO DESIGNED AND BUILT THE FIRST LOW WINGED INTERNALLY BRACED MONOPLANE WITH A FAIRED CANTILEVER LANDING GEAR AND FUSELAGE. NO FURTHER PLANES WERE BUILT AFTER 1912. AT ONE TIME THESE AIRPLANES HELD THE WORLD'S DISTANCE AND ALTITUDE RECORDS. THE MAXIMUM AIR RANGE WAS ABOUT 100 MILES.

FUSELAGE CROSS SECT.

LONGERON
STRUT
VENTRAL KEEL

0 1 2 3 4 5 6
SCALE

10'-6"
5'-3"
RUDDER CONTROL HORN
RIB
2'-9"
10'-3"

LANDING GEAR DETAIL

KEEL NOSE OVER STRUT
FITTING
HIGH PRESSURE PNEUMATIC TIRE
STRUT TO LOWER FUSELAGE LONGERON
FITTING
SOLID RUBBER TIRE
BRACE CABLE
STEEL TUBE
FITTING
SPREADER BAR
STEEL TUBE
FITTING
WIRE SPOKE FABRIC COVERED WHEEL

ELEVATOR
SINGLE VARNISHED FABRIC COVERING
ELEVATOR CONTROL HORN
ELEVATOR CONTROL CABLE
FABRIC LACING
STABILIZER
SINGLE VARNISHED FABRIC COVERING
WOOD STRUCTURE
STRUT
ELEVATOR CONTROL CABLE
FAIRLEAD
VARNISHED FABRIC COVERING
ELEVATOR CONTROL CABLE
FAIRLEAD
DETERMINATE TYPE TOP FUSELAGE TRUSS TRIANGULAR CROSS SECTION
WOOD LONGERON
2'-9"

DOUBLE SPRUCE TOP FLANGE GUSSET
WARREN TRUSS PLYWOOD WEB
DOUBLE SPRUCE BOTTOM FLANGE
SOLID SPRUCE WEB AT CENTER OF WING

WING SPAR DETAIL

PILOT'S COCKPIT
PLYWOOD DECK
RADIATOR HEADER
RADIATOR TUBES
ELEVATOR CONTROL WHEEL
RADIATOR HEADER
SAFETY BELT
COCKPIT FLOOR
CONTROL WHEEL TRUNNION
RADIATOR TUBES
WING ROCKING LATERAL CONTROL WHEEL
RUDDER FOOT BAR CONTROL
KING POST
KING POST WIRE BRACE
FABRIC SEAM
VARNISHED FABRIC COVER

NOTE: LATERAL WING ROCKING MOTION DID NOT EXCEED 10 DEGREES

WARREN TRUSS TYPE AFT SPAR
SOLID WING RIB
WARREN TRUSS TYPE WOOD FRONT SPAR
MULTIPLE WOODEN LATERAL STRINGERS
STRUCTURAL TRUSS TYPE WOODEN WING RIB
INTERMEDIATE WOODEN FORMER RIB
WOODEN KING POST AT FUSELAGE CENTERLINE
SOLID STEEL WIRE BRACES TO WING SPARS FUNCTION AS LANDING WIRES
FUEL TANK
3'-3"
HOSE TO RADIATOR
PUMP FED ANTOINETTE 55 H.P. VEE EIGHT CYLINDER WATER COOLED ENGINE. MAX. R.P.M. 1200.
PADDLE TYPE, STEEL HUB, ALUMINUM BLADE AUTOGENOUS WELDED CONSTRUCTION PROPELLER
6'-0"
36'-6"
1'-6"
6'-0"
8'-6"

WOOD KING POST
ADJUSTABLE TURNBUCKLE
SOLID STEEL BRACE WIRE
FABRIC LACING TO RIB
VARNISHED FABRIC

WING TIP SKID
ENGINE EXHAUST PIPES
ENGINE AIR INDUCTION PIPES
LANDING WIRES
3'-2"
9'-3"
WING TIP SKID
2'-0"
6'-9"

VARNISHED FABRIC
SOLID STEEL BRACE WIRE
FABRIC LACING TO RIB
ADJUSTABLE TURNBUCKLE
WOOD KING POST
LIFT WIRE TO AFT WING SPAR
RADIATOR
LIFT WIRE TO AFT WING SPAR
SOLID STEEL WIRE BRACE TO FRONT WING SPAR FUNCTIONS AS LIFT WIRE
VARNISHED FABRIC
SOLID STEEL BRACE WIRE
FABRIC LACING TO RIB
TURNBUCKLE
WOOD KING POST

6'-0" PROJECTED CHORD
FS
R.S.
HIGH ANGLE OF INCIDENCE
STATICALLY DETERMINATE WOODEN TRUSS TRIANGULAR TYPE FUSELAGE
GROUND LINE
4'-3" TREAD

TYPICAL WING RIB

ANTOINETTE VII

SEMAINE DE COMPAGNE
PRIX GRANDE
AEROPLANES "ANTOINETTE"
PARIS, FRANCE

W.L.NYE

Armstrong-Whitw

drawing by BJORN KARLSTROM

THE Armstrong-Whitworth F.K.8, designed by Mr. Frederick Koolhoven, was a heavier and an improved version of the F.K.3. It had a deeper fuselage, a slimmer type of undercarriage except that the central skid was cut short in front of the front V, and a 160-hp Beardmore engine. This machine was used to a large extent on various fronts of WW I for contact patrols, artillery spotting, light bombing, photography, and reconnaisance work up to the signing of the Armistice.

About halfway through its active service life, the F.K.8 was slightly modified by having a V-type undercarriage fitted (at first from Bristol fighters, and when the stock ran low, from B.E.2c's, finally from Armstrong-Whitworth), and smaller radiators of improved efficiency installed. A long exhaust pipe was also added to carry the exhaust fumes well clear of the crew.

None survive. □

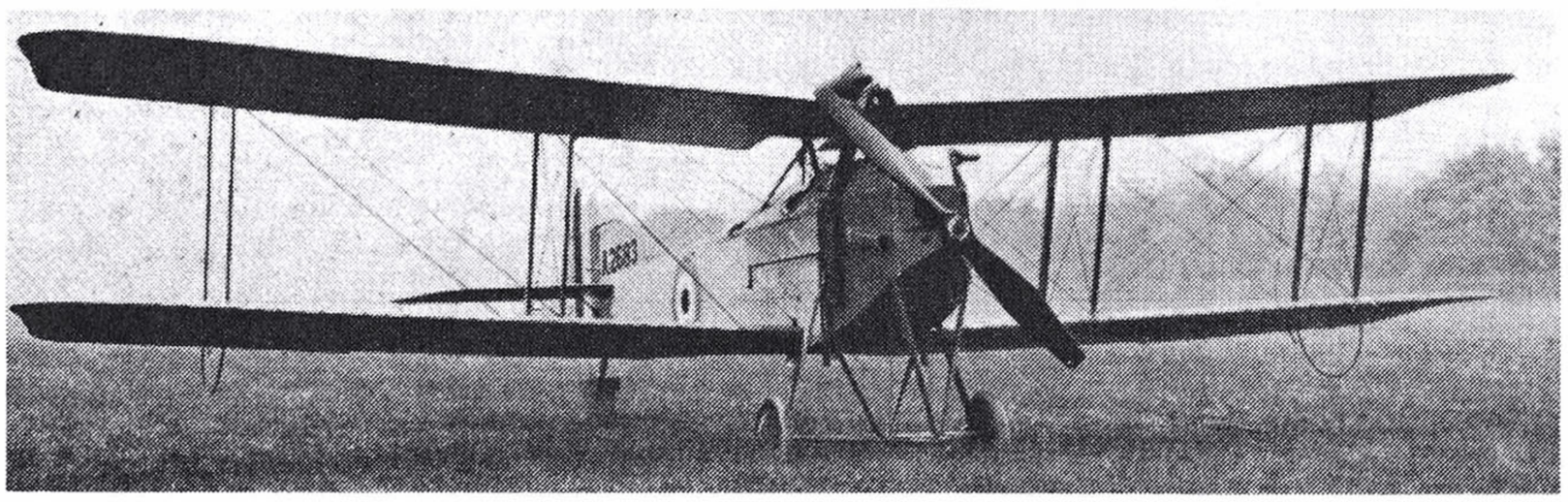

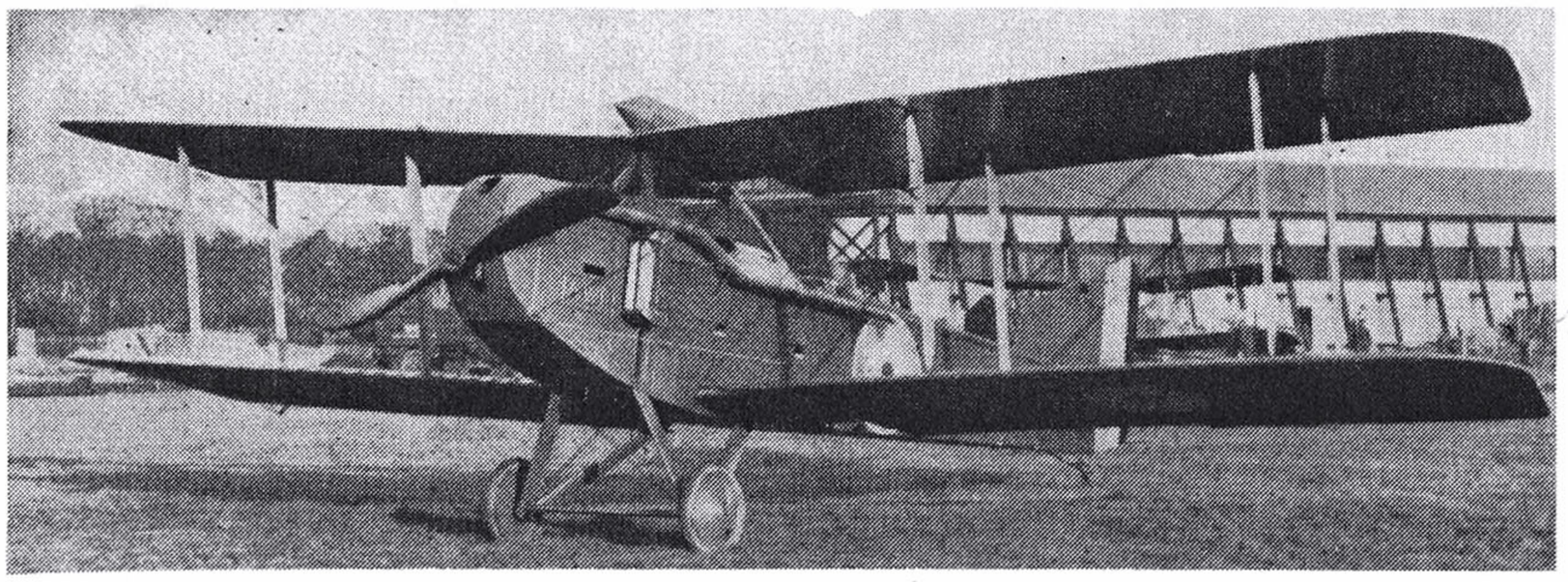

With 120-hp Beardmore engine, the F.K.8 had a top speed of 85 mph. Developed by the British, this aircraft served notably throughout WW I. "Jane's All the World's Aircraft" photos.

Specification.

Type of machine	.. .. ..	**Two-seater Biplane.**
Name or type No. of machine	..	**Armstrong-Whitworth F.K.3.**
Purpose for which intended	..	**Sport and Training.**
Span	.. ..	**40 ft.**
Overall length	.. .. ..	**28 ft. 8 in.**
Maximum height	.. .. ..	**10 ft. 2½ in.**
Engine type and h.p.	.. ..	**90 h.p. R.A.F.**
Weight of machine empty	..	**1,900 lbs.**
Tank capacity in hours	.. ..	**3½ hours.**
Performance.		
Speed at 1,000 feet	.. ..	85 m.p.h.
Landing speed	.. .. ..	38 m.p.h.
Climb.		
To 10,000 feet in minutes	..	23 minutes.

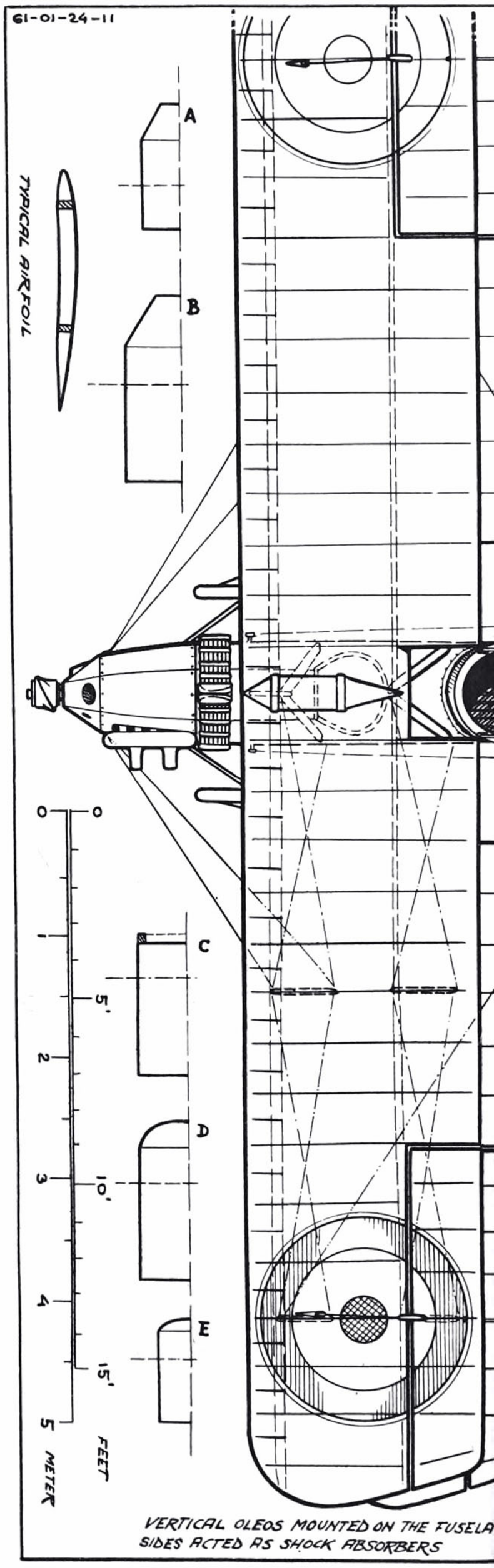

orth F.K.8

POWER PLANT:

ONE 120-HP BEARDMORE, 6-CYL. WATERCOOLED VERTICAL IN-LINE ENGINE.
LATER AIRCRAFTS HAD A VARIETY OF ENGINE INSTALLATIONS, BUT THE 160-HP BEARDMORE (ENLARGED MODEL OF THE 120-HP) GAVE BEST ALL-ROUND PRESTANDA.

COLORSCHEME:

FUSELAGE ALL KHAKI-GREEN
MOTOR COWL AND TOP DECKING AFT TO REAR COCKPIT BLACK.
WINGS AND TAILPLANE KHAKI-GREEN ON UPPER SIDES -- UNDERSIDES CLEAR DOPED LINEN FABRIC (A PALE CREAM SHADE).
ALL STRUTS KHAKI-GREEN OR FRENCH GREY.

PITOT (SEE SIDE VIEW)

LG LEG
OLEO
"RUNNERS"
NOT TO SCALE

SCARFF RING FOR LEWIS M.G.

DETAIL OF THE 160-HP VERSION. RADIATORS, EXHAUST AND LANDING GEAR AS ON VERY LATE MODELS. THE 160-HP MODEL COULD LOOK AS THE MAIN DRAWING EXCEPT THE NEW COWLING.

ELEVATOR CABLES

EXHAUST COLLECTOR WITH TWO STUBS.

RIGGING AS ON MAIN DRAWING

TOP VIEW OF RADIATOR

GRAVITY TANK
AW HAMMERED ON COWL.
PITOT HEAD
RADIATOR
LEWIS M.G.
WHITE FIGURES
A-2725
LIFT HERE
SHOCK TRAVEL
BLUE WHITE RED
WHITE SQUADRON AND "LIFT HERE" MARKINGS (Nº 2 SQ - JUNE 1917 MAR. 1918)
BLUE WHITE RED

W.W. – 1
ARMSTRONG WHITWORTH F.K.8 1916 1918
SCALE: 1:72
DRAWN BY: BJÖRN KARLSTRÖM

Bleriot XI

drawing by WILLIAM WYLAM

ONE of the epic flights of aviation history, probably equal in importance and impact to Lindbergh's flight, was Louis Bleriot's 22-mile flight across the English Channel in 1909. With this amazing feat, the French pioneer created a worldwide sensation and focused the attention of all civilization on the potential use of the airplane as a transportation vehicle.

The Bleriot XI was small and weighed only 660 pounds. Power was a three-cylinder Y-type Anzani air-cooled engine that developed about 20 hp. The airframe was wood, with rubberized fabric covering. Lateral control was attained by warping the wings.

Sparked by an award of $5,000 by the *London Daily Mail* for the first flight across the Channel, Bleriot was challenged for the award by Hubert Latham, a famous record-smashing pilot of that period. On Sunday, July 25, 1909, Louis Bleriot landed his plane near Dover Castle, England, after crossing the Channel in less than one hour, a feat which garnered him over $15,000 in prize money.

Many variants of the XI design were built by the Bleriot firm, including parasols and two-seaters. The photograph and Wylam's drawing show the aircraft Bleriot used to fly the Channel. Note the inflated bladder inside the fuselage.

Many Bleriot XIs are still around, in museums or privately owned. □

An extremely rare photograph, this shot taken as Bleriot commenced his journey into history crossing the English Channel on Sunday, July 25, 1909. Air Age file photo.

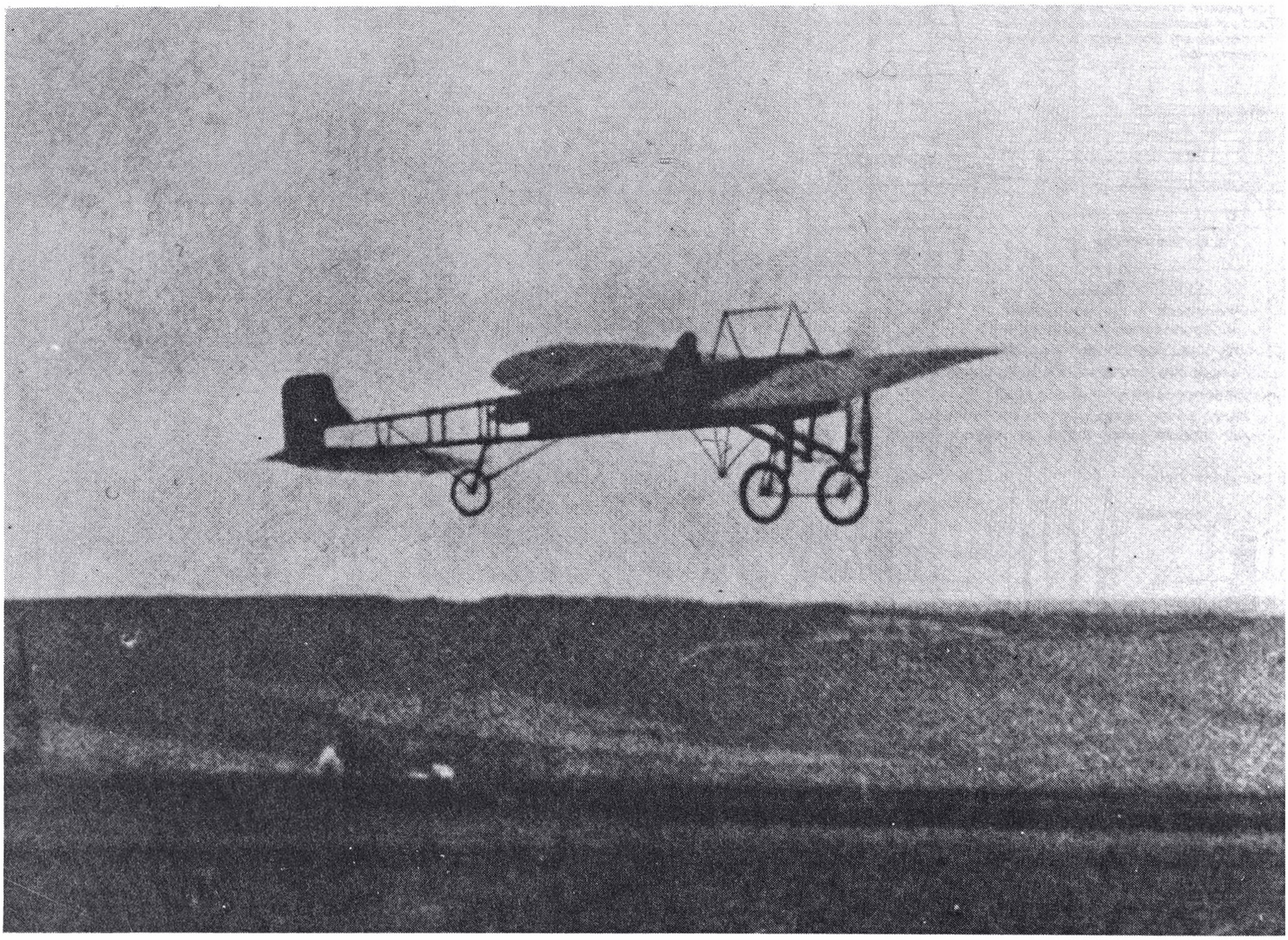

AIR AGE INC., 551 FIFTH AVE., NEW YORK 17, N.Y.

SCALE: 1/4" = 1'0"

DATE:

DRAWN BY ... W. A. WYLAM

GENERAL ARRANGEMENT
BLERIOT "CHANNEL CROSSER" 1909

V!

MAIN FUEL TANK
DOUBLE PULLEYS "W"
WARPING WIRES
FIXED SEAT SUPPORT
FUEL LINE
RUDDER CONTROL CABLES
ELEVATOR CONTROL CABLES
FIXED TAIL WHEEL FORKS
AUX. FUEL TANK (OPTIONAL)
FABRIC
STRUT "X"
CLAMP "Y"
DOUBLE PULLEYS "Z"
ELEVATOR
FIXED STABILIZER
STABILIZER ADJUSTMENT
20" DIA. × 2" TAIL WHEEL
28" DIA. × 2" WHEEL
FIXED HANDWHEEL
DOUBLE "CLOCHE" (BELLS)
ELEVATOR TORQUE TUBE
TORQUE TUBE HOUSING
PIVOT
ELEVATOR CONTROL CABLES
FRONT VIEW
SIDE VIEW

THE HANDWHEEL DID NOT TURN; IT WAS FIXED TO THE SHAFT. HANDWHEEL WAS PUSHED FORWARDS; PULLED BACKWARDS; OR SIDEWARDS FOR FLIGHT CONTROL.

PULLEYS "Z"
WARPING WIRES
RUDDER
ELEVATOR
PULLEYS "W"
REAR SPAR HINGE
WARPING BALANCE WIRES
WARPING WIRES
FLEXIBLE REAR SPAR
RUDDER BAR
PULLEYS "Z"

FLIGHT CONTROL DETAILS

THE TAILWHEEL WAS STEERABLE; BUT WITH THE ADDITION OF AUX. FUEL TANK, THE WHEEL FORK WAS BRACED.

PULLEYS "W"
STEEL TUBING
REAR SPAR (HINGE POST)
STEEL TUBE (FRONT SPAR)
STEEL TUBING
STRUT "X"
SHOCK TRAVEL
STEEL TUBING
FIXED CLAMP
SLIDING COLLAR
FIXED CLAMP

TYPICAL BLERIOT DETAILS

FROM AIRPLANE ℄ TO OUTER SURFACE
ELEVATOR CONTROL CABLES
RUDDER CONTROL CABLES
WARPING WIRES CONNECTIONS
STRINGER
FLEXIBLE REAR SPAR
STRINGER
STRINGER
RIGID FRONT SPAR
FLEXIBLE COMPRESSION TUBE
UNIVERSAL JOINT
CLAMP "Y"
METAL SHEET
FABRIC
RIB SPACINGS
REAR SPAR HINGE
FLEXIBLE STRUT JOINTS
STEEL TUBE - FRONT SPAR MOUNT
ANTI-SH'MMY SHOCKSPRING

ANZANI "FAN TYPE" AIR COOLED THREE CYLINDERS - 24.5 H.P. WAS USED ON THE CHANNEL FLIGHT.

NATURAL VARNISH FINISH
WARPING BALANCE WIRES
WARPING WIRES
RIGID FRONT SPAR BRACING ($\frac{1}{8}$" × $\frac{3}{4}$" STEEL TAPE)
LEADING EDGE
DIHEDRAL
SHOCKSPRING
CLAMP "Y"
UNIVERSAL JOINT
TREAD

TYPICAL BLERIOT AIRFOIL

TYPICAL BLERIOT RIB

* PRONOUNCED BLÂ'RYŌ'

Boeing MB-3A

drawing by JOSEPH NIETO

"IF THE WAR had lasted..." That was a common speculation among aircraft engineers and enthusiasts following the Armistice of WW I. Of course, no sane person of the period was genuinely in favor of continuing the European holocaust, but there was, after the fracas was all over, a somewhat nostalgic—and disappointed—feeling that swept over the American aircraft industry. The Thomas Morse Aircraft Co. had but one thing in mind with the MB-3: to equal, and possibly outperform any European plane of the same type. Designed in 1918, and not flown until February 1919, it was too late to see service in the war.

Boeing was contracted, along with Thomas Morse, to build the Thomas Morse design and the versions produced by Boeing were the MB-3A, which featured modifications to the control surfaces and empennage, among other changes to cowling and engine. The result was an airplane that, in its time, was equal to or better than anything in the air. Serving up until 1929, the MB-3A established Boeing as a quality craft builder at a time when the aviation business was really tough. □

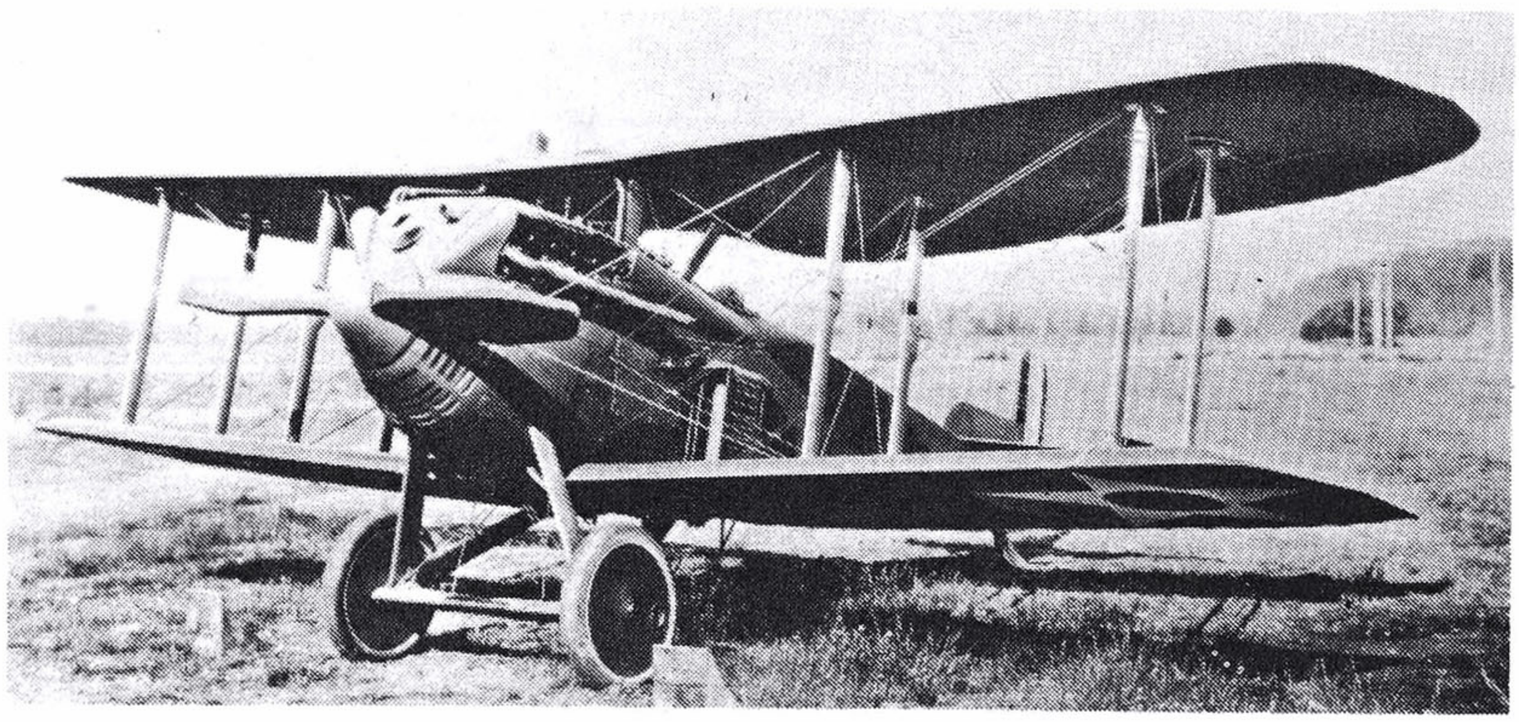

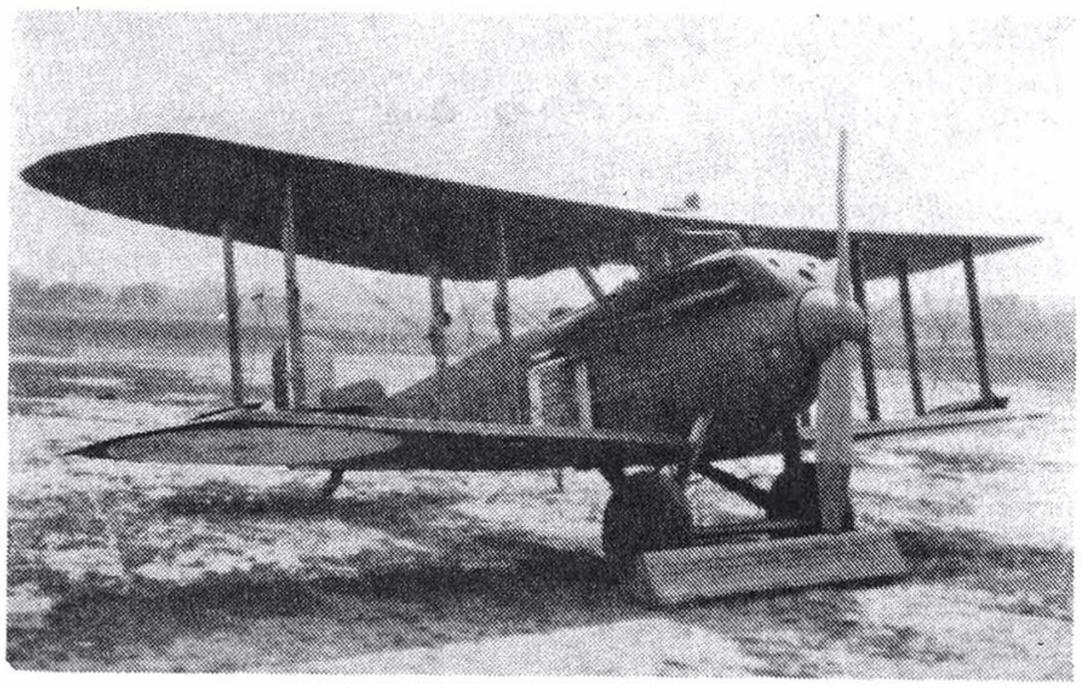

Top photo, "Pedigree of Champions, Boeing Since 1916." Left photo, "Chronicle of Aviation History in America."

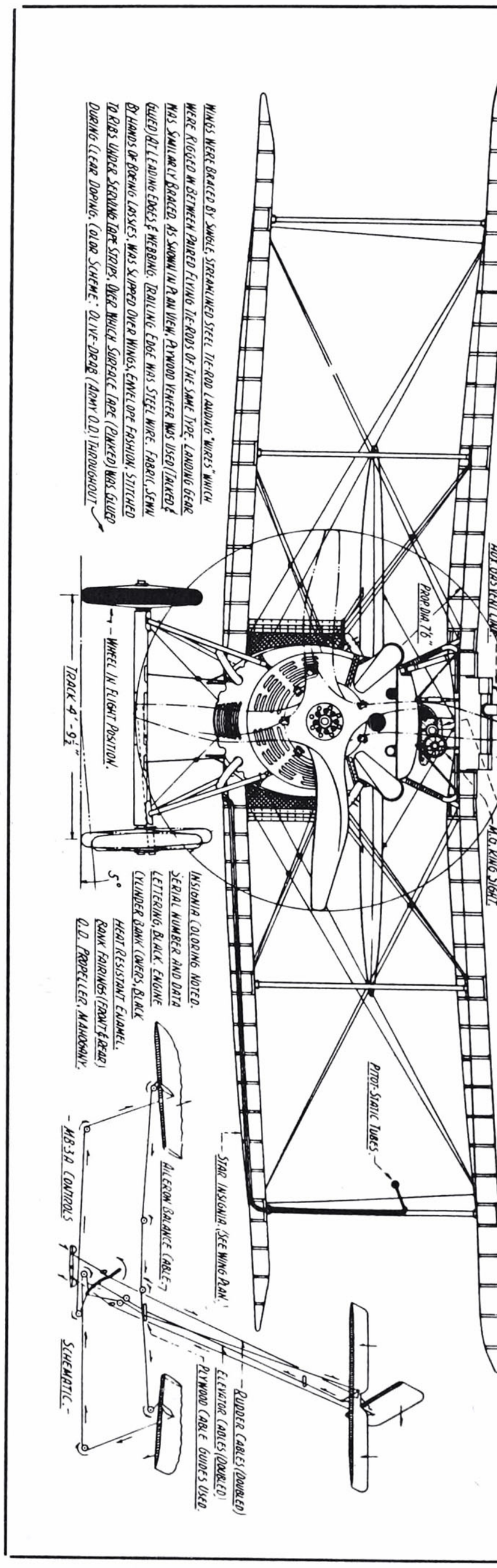

BOEING AIRCRAFT'S FIRST LARGE CONTRACT IN 1921, WAS FOR 200 OF THE TINY WOOD & FABRIC MB-3A THOMAS-MORSE DESIGNED PURSUITS, POWERED WITH THE 300-340 H.P. HISPANO-SUIZA TYPE "H" ENGINE. THE MB-3A, (THEN REDESIGNATED MB-3M) WAS USED IN THE U.S. ARMY AIR SERVICE'S FIRST POST-WAR I PURSUIT SQUADRONS. (KELLY FIELD, A.S.A.F.S. MB-3A'S WERE IDENTIFIED BY THE FLYING WASP INSIGNIA.) TOP SPEED OF THE MB-3A RANGED FROM 140 TO 163 M.P.H. CRUISED AT 125.

WING CHORD 5'7", DIHEDRAL 3°. INCIDENCE: UPPER, 2° TO 1st. STRUT; 2°20' AT 1st. LOWER, SAME. GAP, 4'6". OVERALL LENGTH, 20'0" MAX. HEIGHT, 8'7". LANDING GEAR, FIXED. PROPELLER, WOOD, 2 BLADES & SPINNER OR 4 BLADE, NO SPINNER. DESIGN EMPTY, 1,716 LBS. DESIGN GROSS, 2,339 LBS. ARMAMENT, ONE .30 CAL. OR ONE .50 CAL. FIXED SYNCHRO M.G's. THE FIRST BOEING BUILT MB-3A WAS DELIVERED JULY 29, 1922. THE LAST, DEC. 22, 1922. BOEING SER. NO'S WERE 210 THRU 409, CUSTOMER'S SER. NO'S; A.S. 68237 THROUGH 68436. THE FIRST 50 THAT WERE BUILT BY THOMAS-MORSE, WERE A.S. 63331 THRU 63580. (TOTAL OF 250 MB-3A'S WERE BUILT.)

STEEL TUBE "SUPERSTRUCTURE" ONE .30 CAL. & ONE .50 CAL. GUNS USED. M.G. BLAST TUBE

CENTER SECTION STRUT NERODS. (REF.)

TUBE SIGHT, SPONGE RUBBER EYEPIECE.

INSTRUMENT PANEL (LEFT SIDE ONLY.)

PLY. VENEER COCKPIT COAMING & HEADREST.

SEPARATION POINT OF FUSELAGE.

OLD STYLE RUDDER, V-FIN AND HORIZONTAL SURFACES SHOWN ELEVATOR HORN ENCLOSED IN FIN

SKID SHOCK CORD

HISPANO-SUIZA 8 CYL. V-TYPE "H" 300-340 H.P. ENGINE INSTALLATION.

AXLE "WING".

LOWER WING ROOT OUTLINE (REF.) CROSSHATCHED SECTION ABOVE, IS MAIN FUEL TANK.

ACCESS OPENINGS TO SKID & TAIL CONTROLS.

PILOT'S MOUNTING STEP. (LEFT SIDE ONLY.)

PILOT'S SEAT, WAS NON-ADJUSTABLE.

PLY. VENEER

23½" 21½" 21¾" 18¾" 19½" 18"

MODEL BUILDERS, PLEASE NOTE: IT IS THE SINCERE DESIRE OF THE AUTHOR TO FURNISH IN THESE DRAWINGS THE GREATEST & MOST ACCURATE DETAILS POSSIBLE. FOR SAKE OF CLARITY, MUCH DETAIL HAD TO BE EXCLUDED. ONLY THE CURVED BODY SECTIONS OF NOSE ARE SHOWN. (LOWER RIGHT) BUT MODELER MAY BE GUIDED BY OUTLINE OF BODY IN PLAN VIEW OF NOSE AT RIGHT. STRUCTURE OF LATE TYPE STABILIZER & ELEVATOR (PLAN VIEW) IS NOT AUTHENTIC BUT WAS RECONSTRUCTED WITHIN AUTHENTIC OUTLINES TO THE CONFORMITY OF WING CONSTRUCTION. BRACING CABLES STRINGER, (ABOVE & BELOW)

FABRIC

Fabric Covered Ply. Veneer.

USED BETWEEN FORMERS A, B, C & D, (SIDE VIEW, SKELETON) WERE DOUBLED. NOT SHOWN, BUT USED, WERE BRACE WIRES WITHIN BODY FROM STATION "G" TO TAIL SKID POST.

DIRECT READING MAGNETIC NAVIGATION COMPASS.

AUX. GRAV. FEED GASOLINE TANK QUANTITY GAGE.

HAND-HOLD IN WING (CENTER-SECTION, PILOT MOUNTING.

STREAMLINED COOLANT (WATER) RADIATORS (EACH SIDE.)

AUXILIARY FUEL TANK STRAPS.

MACHINE GUN TUBE SIGHT.

ENGINE COOLANT EXPANSION TANK.

HOOK PROVIDED AS ANCHORAGE FOR HOISTING SHIP.

7" 7" 6½" 6¾" 5¾" 7" 6¾" 7" 7¼" 7" 7½" 7¼" 4¾" 6" 6¼" 7" 6¾" 6½" 7" 5¼" 6½" 6¾" 7" 7¼" 7" 5" 7½" 7½" 7⅛" 7⅝" 6⅜"

8½" 9" 9" 9" 9" 9" 7" 14" 1" 3'4¼"

PLYWOOD WEB. CAP STRIP. 5'7"

WING RIB DETAIL.

CELLULOID WINDOW ON METAL SIDE PANEL, R.S. ONLY. (REF.)

FIRE EXTINGUISHER, RIGHT SIDE ONLY.

CENTER SECTION & ENGINE (METAL) BONNETS (REF.)

90° TWIST COWL & PANEL FASTENER

PLY. VENEER WEBS

LOWER WING STUB. (REF.)

CENTER LINES OF "SUPERSTRUCTURE" TUBE CROSSMEMBERS (1, 2 & 3.)

22¾" 12¾" 11¼" 13" 14"

FRAME, SUPPORTING WINDSHIELD, M.G. TUBE & BEAD SIGHTS & COWL.

ENGINE BONNET FRAME

STEEL "H" ENGINE BEARERS CAST. PLATE.

12½"

MACHINE GUN MOUNTS REAR. FRONT.

PLAN VIEW SHOWING ENGINE MOUNTING, LONGERONS, BODY FORMERS A, B, C, D, COWLING FRAMES, STRUTS & M.G.'S & ACCESSORY SUPPORTS.

SPARS

STEEL TUBE "SUPERSTRUCTURE" SUPPORTING C. SECT. STRUTS, GUNS, SIGHTS, & COWL FRAMES.

NOSE FORMERS A, B, & C, SUPPORTED ENGINE BED PLATES & BEARERS, FROM FORMER D REARWARD, UPRIGHTS WERE UNIFORM.

D 2 REQ. L & R.

C B A

APP. 5 PLY. WOOD.

CAST BEARERS.

ALUMINUM CHANNEL PROTECTOR.

RED WHITE BLUE

RING & BEAD SIGHT FOR SHORT DISTANCE FIRING.

LONG RANGE TUBE SIGHT PENETRATED MIDDLE OF WINDSHIELD.

DETACHABLE METAL FAIRING ALSO INSTRUMENT PANEL COVER.

EMPTY CARTRIDGE CHUTE & RADIATOR PROTECTOR.

LATER TYPE EMPENNAGE. (ALSO NOTE PLAN VIEW OF TAIL.)

A.S.68429

WOODEN TAIL SKID.

STEEL SKID SHOE.

LOWER WING CONN. "STUB."

RADIATOR SHOWN ABOVE, USED ON BOTH SIDES., WAS EQUIPPED WITH "VENETIAN" SHUTTERS, CONTROLED AT WILL. LANDING GEAR TIE-ROD BRACING & VIBRATION "ABSORBER." GEAR AXLE OPERATED VERTICALLY IN STRUT SLOT AS SHOWN AT LEFT. SHOCK-CORD DETAIL NOT SHOWN. ASSISTANCE ON SUCH DETAILS, FURNISHED ON REQUEST. J.N.

AIR AGE INC. 551 FIFTH AVE, NEW YORK, 17, N.Y.

SCALE: ¼" - 1'-0"

FULL SIZE: ¾" - 1'-0"

DRAWN BY: Joseph Nieto.

GENERAL ARRANGEMENT & AIRFRAME DETAILS.

Boeing U.S. ARMY 1922 PURSUIT TYPE MB-3A.

Bristol F.2B

drawings by WILLIAM WYLAM

AN OUTSTANDING success in every role it was to play in WW I, the Bristol fighter, affectionately known as the "Brisfit," was described as a "pilot's airplane" by all accounts on file with the British Air Ministry. But its first appearance over the Front—six F.2A's—ended with four of them shot down, because their pilots had not yet learned to fly them like fighters instead of observation planes. When they did learn, in the middle of 1917, the Fighter began to replace the then-staged S.E.5. It didn't take long for stories about the F.2B's fighting ability to get around. A two-place airplane, the F.2B was a departure from pilots' prior experience and the acceptance of it was initially slow. The training methods, however, stressed the remarkable features of the airplane itself and the pilot-observer teamwork necessary to obtain the greatest possible effect. The result was to fulfill a specific function—fighting in the air.

The engine selection varied from 190 to 280 hp, depending on the job expected of the plane and its date of manufacture. Radiators were fitted accordingly and differed in shape and size. The F-2B was probably the only two-seater built during WW I that handled like a single-seater. It was maneuverable and as fast as the Fokker D.VII. These features made it possible for pilots such as Capt. Andrew McKeever to gain 23 of his 30 victories. And McKeever had only one eye!

As many as ten F.2B's survive, all in England; two of them in museums, the rest fragments being restored.

Wylam's drawings of the F.2B are among his most beautiful and least accurate. Modelers should check especially carefully against good photographs the shape of the oval radiator, the tapering rear fuselage, vertical tail, and underline of engine cowling. □

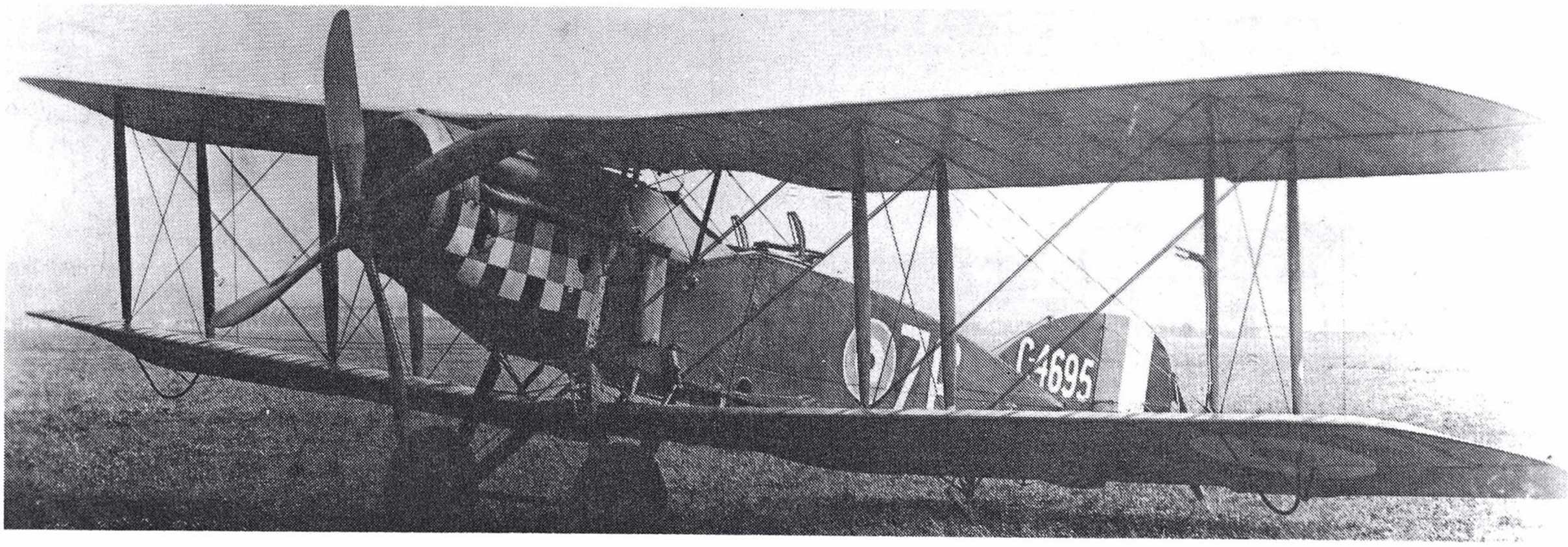

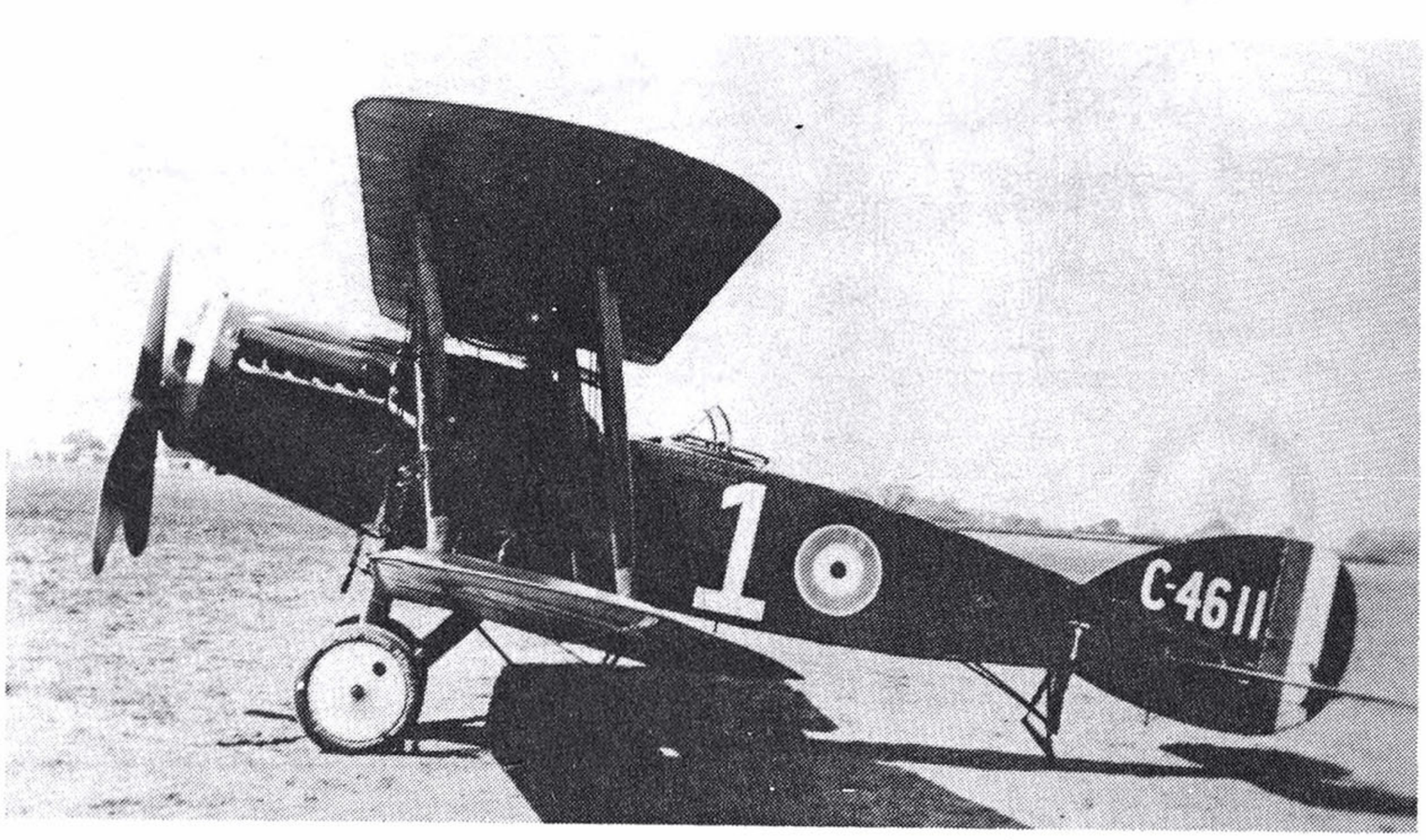

The highly successful British Bristol Brisfit was very maneuverable and as fast as the Fokker D.VII. Air Age file photos.

NOTE: "F-2A" AND EARLY "F-2B" MODELS WING SPAN WERE 39'-5". THIS WAS DUE TO DECREASE OF GAPS AT POINT "Z."

39'-4"

19'-8"

17'-6½"

4'-3"

2'-1½"

1'-8⅜"

BRASS RADIATOR SHELL
SHUTTER CONTROL HOUSING
STEEL CONTROLABLE SHUTTERS
AIR INTAKE - OIL COOLER

FLUTED CHANNEL - WATER TUBING CLEARANCE
RIVETED HEAD COWL

+3° DIHEDRAL

SINGLE LANDING WIRES

GUN SIGHT ℄

M.G. ℄

7¾"

1'-10½"

5'-5" GAP

DOUBLE FLYING WIRES

+3° DIHEDRAL

"Z"

"Z"

FALSE RIB
NOSE SPAR
ALUMINUM CAP
AIRSPEED HEAD
¼" BRASS TUBING

BRASS SHEATHED LEADING EDGES
MAHOGANY LAMINATED PROPELLER
EXHAUST MANIFOLD
SHOCK CORD LOOP
RUBBER SHOCK CORD
FIXED SIDE STRUTS
FIXED SPREADERS - 1" O.D. STEEL TUBING
STREAMLINE HOUSING - AXLE

6"

8"

2'-6" DIA.

WING SKID - 1" O.D. STEEL TUB
AILERON CONTROL HORN

2" TO 4"

5'-8" TREAD

9'-8 DIA. - 4 BLADED PROPELLER

COLOR SCHEME:

FUSELAGE & VERTICAL FINS	KHAKI
WINGS & HORIZON'L. STABILIZERS	BUFF
ENGINE & FUSELAGE COWLS	SILVER OR KHAKI
LANDING GEAR, PROPELLER, STRUTS	DULL BLACK
WING STRUTS, FUSELAGE FRAME W'K.	NATURAL VARNISH

MODEL "F-2B" WITH HISPANO-SUIZA-200 H.P. MODEL "E" ENGINE →

M.G. ℄

1'-10½"

1'-8¼"

¾"

1'-0" DIA.

AIR INTAKE

ENGINE MOUNT "F-2A" — "F-2B" (H.S.)

12"

HEADER TANK
BLAST TUBE - 2¼" O.D.
25-9"

5½"

2"

3½"

10"

WATER VALVE ACCESS

VICKERS MACHINE GUN - 30 CAL.
AMMUNITION TRAY
EMPTY SHELL CHUTE

COWL FASTENERS
CUTOUT FOR STRUTS

SNAP FASTENERS
EXHAUST STACK

TUBULAR ENGINE MOUNT

OIL DRAIN
WATER DRAIN

BOTTOM VIEW (F2B WITH H.S.)

MODEL "F-2B" WITH ROLLS-ROYCE "FALCON III" ENGINE

25'-9" ALSO 26'-2" (HIGH ALTITUDE MODEL)

5½"
3½"

3'-9½" ALSO 4'-2½"

HAMMERED AIR INTAKE
EMPTY SHELL CHUTE

FLUTED CHANNEL
RIVETED COWL
SNAP FASTENERS

1'-7½"

7"

AILERON CONTROL HORN
FLEXIBLE WINDSHIELD
LEATHER CRASH PAD
TELESCOPING FOOT STEP
LACING

BEAD & RING SIGHT (OPTIONAL)
AMMUNITION DRUM
SINGLE OR TWIN LEWIS M.G.
GUN ADAPTER CLAMPS

RED
WHITE
BLUE
YELLOW

DOUBLE RUDDER CONTROL CABLES
DOUBLE ELEVATOR CONTROL CABLES
ADJUSTING GUY-WIRE POST
BLACK REGISTRATION NUMBERS

4'-1½"

2'-0"

5"

1'-11½"

E
F

J 8586

3'-1"

1'-3¼"

J-8586

LIFT HERE

2'-6¾"

FIXED BRACE WIRES
STABILIZER ADJUSTOR'S BELL CRANK
WHITE REGISTRATION NUMBERS

6'-0½"

2" DIA. HELICAL SPRING

(REAR VIEW)

OPTIONAL CUTOUTS

5½"
3½"

1'-7½"

CARBURETOR AIR INTAKE
ROLLS-ROYCE "FALCON III"

EMPTY SHELL CHUTE

MODEL "F-2A" WITH ROLLS-ROYCE "FALCON I"

RECESSED AREA

FUEL TANK ACCESS

6"

TUBULAR ENGINE MOUNT (ENDS)
UNCOVERED CENTER SECTION
EXHAUST MANIFOLD UNION
WATER DRAIN VALVES ACCESS
OIL DRAIN VALVE ACCESS

STEEL TUBING

AIR INTAKE - OIL COOLER
STAMPED COOLING LOUVERS
FUEL TANK ACCESS HOLE
OPTIONAL COOLING AIR OUTLETS

5'-6"

3"

SHOCK TRAVEL

10°

8" PROP'R. CLEARANCE

5'-10½"

ROTATABLE SCARFF RING
ADJUSTABLE GUN MOUNT
EXHAUST MANIFOLD - 3⅝" O.D. TUBING
FOOT PLATE
AILERON GAP WIRE
EXHAUST MANIFOLD SUPPORT
AILERON HORN BRACEWIRE
ELEVATOR CONTROL HORN
AILERON CONTROL CABLE
WING SKID
STEEL TUBING - ¾" O.DIA.
TAIL SKID - HICKORY
TAIL SKID SHOE - STEEL PLATE
STEEL TUBING, WOOD FAIRED

WOODEN FAIRING - FABRIC COVERED
STEEL TUBING - 1½" O.D.A.
STREAMLINE HOUSING
SHOCK CORD LOOP
GROUND LINE - FULLY EXTENDED

AIR INTAKE
STAMPED COOLING LOUVERS
LANDING GEAR & FLYING WIRE LUGS

LOWER WING'S OUTER PANEL

"F-2B" (R.R) SUMP COWL IS SIMILAR TO "F-2A" WITH CHANGES ON OIL COOLER'S AIR INTAKE & FUEL TANK'S ACCESS HOLES. ALL SUMP COWLS ARE REMOVABLE BY REMOVING MACHINE SCREWS ON INTERIOR.

BOTTOM VIEW

AIR AGE INC., 551 FIFTH AVE., NEW YORK 17, N.Y.

SCALE: ¼" = 1'-0"	GENERAL ARRANGEMENTS
DATE:	BRISTOL "BRISFIT" FIGHTER
DRAWN BY ... W.A.WYLAM	F-2B

WELDED ATTACHMENT LUGS

LANDING GEAR'S STRUT DETAILS

FIXED BRACE WIRES (FRONT STRUTS ONLY)

STEEL TUBING - 1½" O.D.

FABRIC COVERED WOOD FAIRING

FIXED SPREADER - 1" O.D. STEEL TUBING

WELDED SHOCK CORD LOOP

BRAIDED WIRE - SHOCK STOP

SECTION "A-A"

30" O.D. × 6" TIRE & WHEEL

TIRE & TUBE

TIRE RIM

SPOKES & DISC COVER

ROLLER BEARINGS

WASHER PLATE & LOCK

AXLE - 1¾" O.D. STEEL

WOOD FAIRING

WHEEL & AXLE ASSEMBLY

ENTIRE LANDING GEAR CHASSIS ASSEMBLY IS RIGIDLY ATTACHED TO FUSELAGE'S STRUCTURE. WHEEL & AXLE ASSEMBLY IS HELD TO CHASSIS BY RUBBER SHOCK CORD.

STABILIZER ADJUSTOR'S CABLE

WELDED ADJUST'E. FORK

ALUMINUM CAP

STEEL TUBING - 1" O.D.

LEATHER PATCH

5'-2" TO 5'-3" ADJUSTABLE

5'-0" FIXED

6"

4½"

5"

OUTBOARD INTERPLANES STRUTS DETAILS INBOARD

NOTE: PLANS ON LEWIS M.G. AND SCARFF-RING GUN MOUNT WILL BE IN FUTURE ISSUE OF MODEL AIRPLANE NEWS.

13'-8"

4½"

5"

2'-6½"

HINGE

2'-1"

ADJUSTABLE GUY-WIRE POST

SIDE LACING

DOUBLE RUDDER CABLES

DOUBLE ELEVATOR CABLES

.30 CAL. SINGLE OR TWIN LEWIS M.G.

HINGED GUN MOUNT

SLIDING REAR SEAT

REMOVABLE BACK SUPPORT

DETACHABLE REAR CONTROL COLUMN

FIXED FRONT CONTROL COLUMN

RUDDER CONTROL BAR

FLOORBOARD

DOUBLE PULLIES

BEARINGS

AILERON QUADRANT

PIVOT

ELEVATOR'S TORQUE TUBE

FLIGHT CONTROL DETAILS

REAR RUDDER CONTROLS

CONTROL COLUMNS

RUDDER CONTROL BAR

SECTION "A"

TURNBUCKLE

ATTACHMENT LUG

HINGE

STEEL ROD

COMPRESSION RIB

STEEL FITTINGS

AILERON HINGE

FALSE RIB

RIB

FRONT SPAR

REAR SPAR

DRAG WIRE

ANTI DRAG WIRE

TURNBUCKLE

FORKED EYE

AILERON CONTROL CABLE (TO AILERON QUADRANT)

¼"

5¼" TO 6" (HUB WIDTHS)

9" O.D.

½" DIA. BOLTS - 8 REQ'D.

6¾" BOLT CIRCLE

10'-0" DIA. TWO BLADED PROPELLER

LOWER CENTER PANEL STRUTS

FALSE NOSE RIBS

BRASS SHEATHING

WING PANEL ATTACHMENT LUGS

BLAST TUBE

REMOVABLE ENGINE BONNET

BRASS RADIATOR SHELL

ADJUSTABLE PILOT'S SEAT

CONTROL COLUMN

TRANSPARENT PANEL (OPTIONAL)

EMPTY SHELL CHUTE

AMMUNITION TRAY

FIXED .30 CAL VICKERS M.G.

MACHINE GUN'S COOLING AIR INTAKE

AILERON BALANCE CABLE (TO OPPOSITE AILERON)

YELLOW

BLUE

WHITE

RED

AILERON CONTROL HORN

AILERON BALANCE CABLE

AILERON CABLE PULLEY

AIR AGE INC., 551 FIFTH AVE., NEW YORK 17, N.Y.	
SCALE: ¼" = 1'-0"	GENERAL ARRANGEMENTS
DATE:	BRISTOL "BRISFIT" FIGHTER
DRAWN BY ... W. A. WYLAM	F-2B

AIR AGE INC., 551 FIFTH AVE., NEW YORK 17, N.Y.

SCALE: 1/4" = 1'-0"

DATE:

DRAWN BY .... W.A.WYLAM

FUSELAGE DETAILS

BRISTOL "BRISFIT" FIGHTER

F-2B

NOTE: PLANS ON ROLLS-ROYCE "FALCON" ENGINE WILL APPEAR IN FUTURE ISSUE OF MODEL AIRPLANE NEWS.

NOTE:
"F.2C" MODEL EMPLOYS 300 H.P. HISPANA-SUIZA MODEL "H". LENGTH OVERALL WAS 26'2" (HIGH ALTITUDE MODEL).

FUSELAGE STRUCTURE ℄
REAR SPAR ℄
FRONT SPAR ℄
EQUALLY SPACED FALSE RIBS
7 EQUALLY SPACED RIBS
DIHEDRAL
HORIZONTAL THRUST ℄
⅛" DIA. WIRES
WING CENTER STRUTS ℄
⅝" DIA. WIRES
3/16" DIA. WIRES
½" RAD. (TIP)
±5° STABILIZER ADJUSTMENTS
"F.2A" IS 2'0" WIDTH
HORIZONTAL STABILIZER PLAN
EXHAUST MANIFOLD "F.2C"
TUBULAR ENGINE MOUNT ℄
ENGINE BONNET LINE
TOP-SIDE-FUSELAGE STRUCTURE
BOTTOM SIDE-FUSELAGE STRUCTURE
R.A.F. # 8 AIRFOIL ½" = 1'0"
PARALLEL WITH THRUST ℄
3" SQUARES
OPTIONAL TAIL SKID "F.2B" & "F.2C"
SECTION "A-A"
SECTION "B-B"
SECTION "C-C"
SECTION "D-D"
SECTION "E-E"
SECTION "F-F"
STAGGER
+1° INCIDENCE
"F.2A" IS 13'10" SPAN

AIR AGE INC., 551 FIFTH AVE., NEW YORK 17, N.Y.	
SCALE: ¼" = 1'0"	GENERAL LAYOUT DATA
DATE:	BRISTOL "BRISFIT" FIGHTER
DRAWN BY ... W. A. WYLAM	F-2B

Chance Vought

drawings by WILLIS NYE

VE-7, VE-9, & UO-1

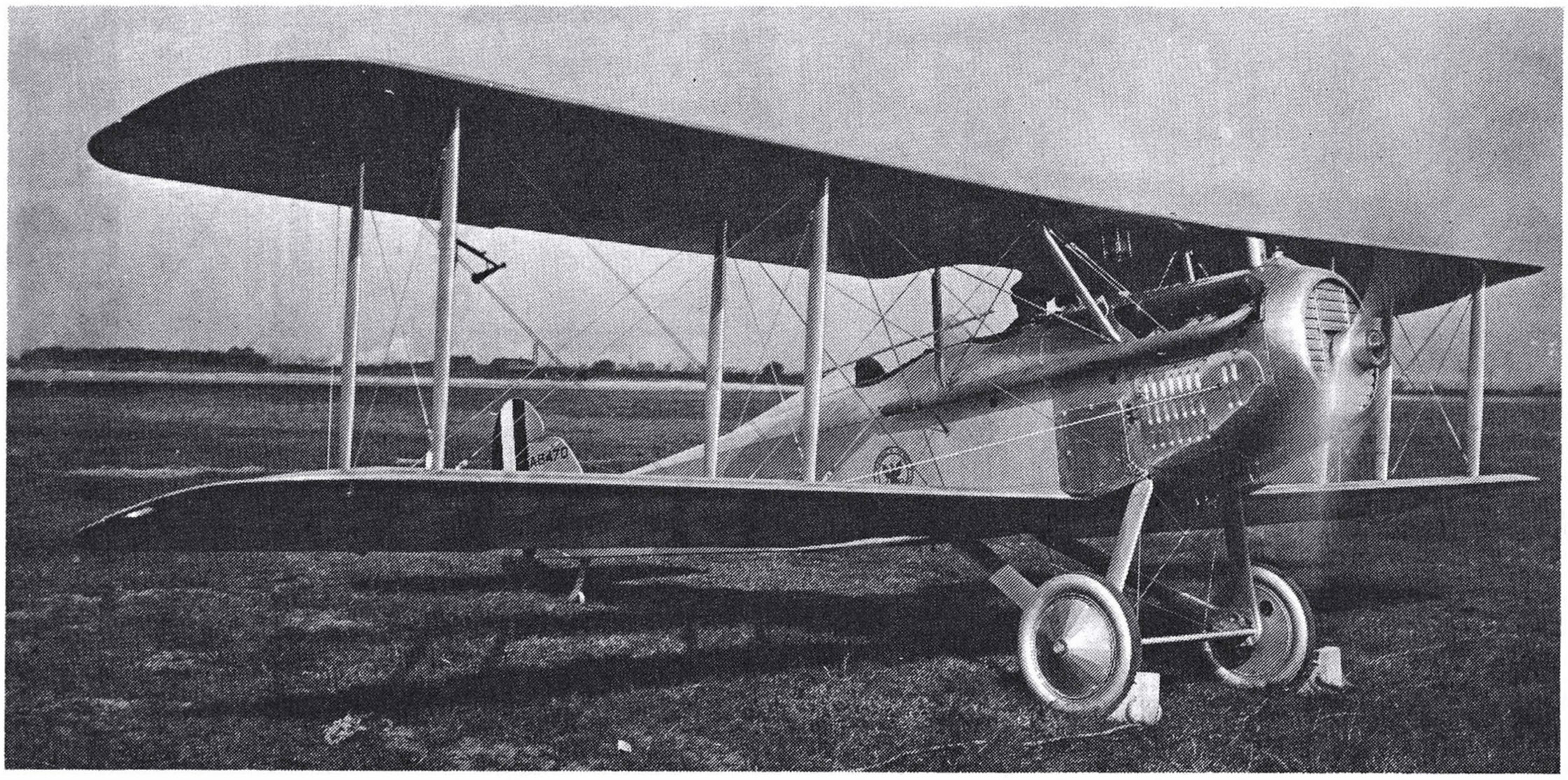

THE CHANCE-Vought VE-7 was designed as an entrant in the U.S. Army advanced trainer competition held in 1917, and the first experimental airplane was submitted for testing to Army authorities in 1918. The VE-7 won the competition and was ordered into production by the parent company and two licensees, the Springfield Aircraft Co. and the B.F. Sturtevant Co. Twenty VE-7's were delivered by the end of WW I, and in 1922 to 1923 twenty-seven VE-9 airplanes were procured by the U.S. Army Air Service.

The VE-9 was an improved version of the VE-7, and was the first American-designed ship-board airplane that could be launched from a catapult. The service time of this version was one of the longest of that era, spanning over 10 years, which gave credibility to the company that was to remain a main provider of aircraft for the U.S. armed forces for many years. □

Their association with Naval aircraft design is legendary. Air Age file photos of VE-7.

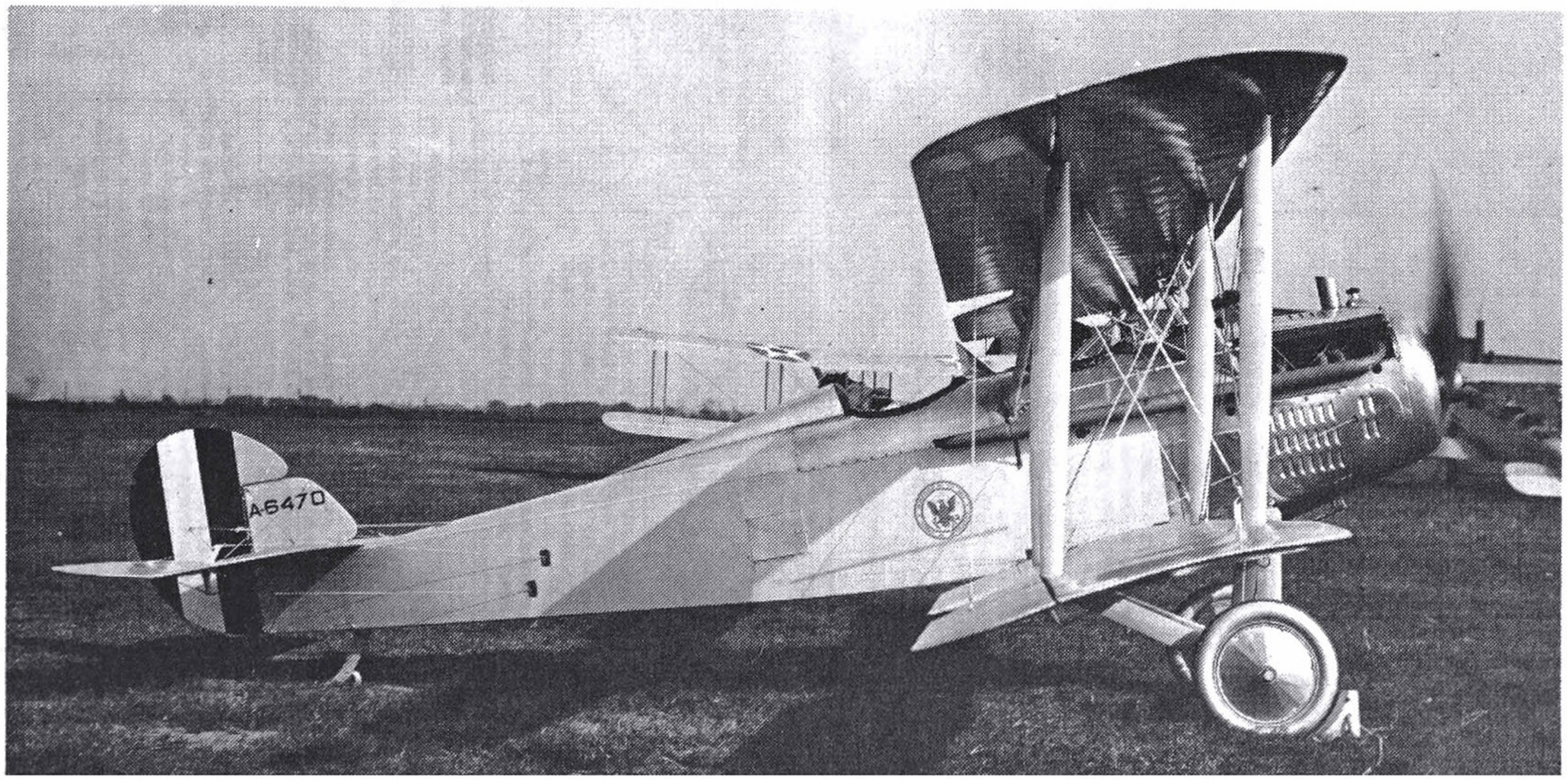

VOUGHT VE-7
ENGINE INSTALLATION: WRIGHT-MARTIN HISPANO-SUIZA, MODEL "A," 150 H.P. WATERCOOLED ENGINE.
PROPELLER: LIBERTY, 2-BLADE, 8'-4" DIAMETER OF LAMINATED WALNUT. PITCH 5'-5½".
ENGINE EXHAUST MANIFOLD: TUBULAR WELDED SHEET SUPPORTED ON FORGED BRACKETS.
ENGINE STARTING: PILOT'S COCKPIT PROVIDED WITH BOOSTER MAGNETO AND LUNKENHEIMER FUEL PRIMER. ENGINE WAS HAND CRANKED.
ENGINE CONTROLS: EACH COCKPIT PROVIDED WITH THROTTLE, SPARK, AND FUEL MIXTURE LEVERS ON LEFT SIDE.
ENGINE RADIATOR: HONEYCOMB TYPE, 9½ GALLONS WATER SYSTEM CIRCULATION CAPACITY. DISTANCE TYPE TEMPERATURE INDICATOR. SHUTTERS MANUALLY CONTROLLABLE.
FUEL SYSTEM: TWO FUEL TANKS, MAIN UNDER REAR SEAT, AUXILIARY UNDER COWL BETWEEN ENGINE AND INSTRUMENT PANEL. FUEL CAPACITY 32 GALLONS. FUEL PUMPED TO CARBURETOR BY AN ENGINE-DRIVEN FUEL PUMP. HAND AIR PUMP FOR STARTING IN PILOT'S COCKPIT. FUEL SHUT-OFF VALVES IN EACH COCKPIT.
FLIGHT CONTROLS: DUAL JOYSTICKS AND RUDDER BARS IN EACH COCKPIT. CONTROLS ASSEMBLED AS A UNIT AND QUICKLY REMOVABLE.
INSTRUMENTS: CONSIST OF ALTIMETER, AIRSPEED INDICATOR, CLOCK, TACHOMETER, FUEL PRESSURE GAUGE, OIL PRESSURE GAUGE, WATER TEMPERATURE GAUGE, ETC.

DESIGN NOTES VE-7
(12) VARIOUS MAKES AND TYPES OF LAMINATED PROPELLERS WERE USED WITH VARIATIONS IN PITCH.
(13) INTERPLANE STRUTS OF CONSTANT OR VARIED STREAMLINE CROSS SECTION WERE USED.
(14) ENTIRE FLIGHT CONTROLS ARE CABLE ACTUATED. ALL CABLES ARE DOUBLE, FLEXIBLE TYPE.

THE AMERICAN VERSION OF THE HISPANO-SUIZA ENGINE WAS MANUFACTURED UNDER FOREIGN LICENSE BY THE SIMPLEX AUTOMOBILE COMPANY. THIS COMPANY WAS LATER ABSORBED BY THE WRIGHT-MARTIN AIRCRAFT COMPANY OF NEW BRUNSWICK, N.J., THE PARENT COMPANY OF THE PRESENT CURTISS-WRIGHT CORPORATION.

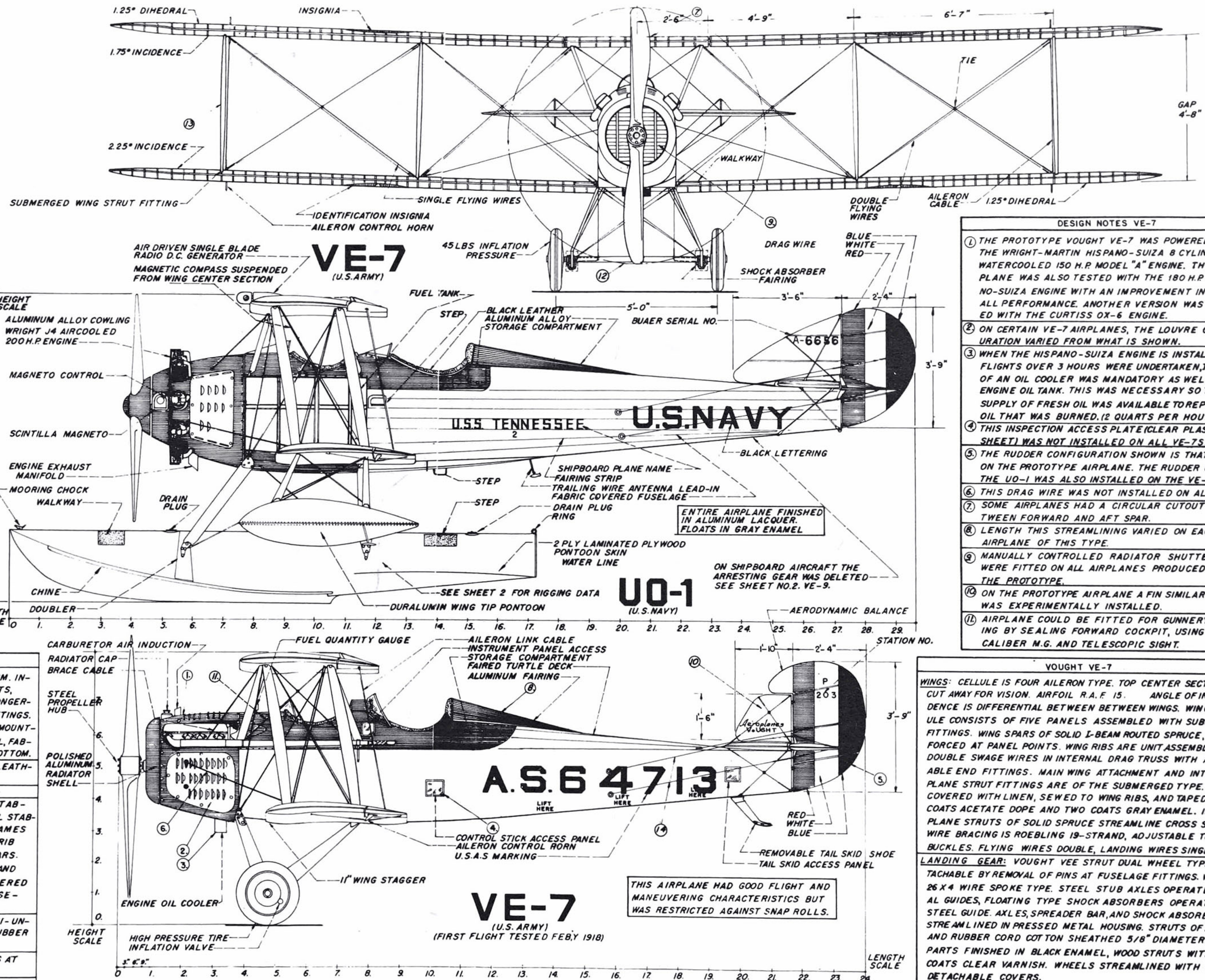

DESIGN NOTES VE-7
(1) THE PROTOTYPE VOUGHT VE-7 WAS POWERED WITH THE WRIGHT-MARTIN HISPANO-SUIZA 8 CYLINDER WATERCOOLED 150 H.P. MODEL "A" ENGINE. THE AIRPLANE WAS ALSO TESTED WITH THE 180 H.P. HISPANO-SUIZA ENGINE WITH AN IMPROVEMENT IN OVERALL PERFORMANCE. ANOTHER VERSION WAS POWERED WITH THE CURTISS OX-6 ENGINE.
(2) ON CERTAIN VE-7 AIRPLANES, THE LOUVRE CONFIGURATION VARIED FROM WHAT IS SHOWN.
(3) WHEN THE HISPANO-SUIZA ENGINE IS INSTALLED, IF FLIGHTS OVER 3 HOURS WERE UNDERTAKEN, THE USE OF AN OIL COOLER WAS MANDATORY AS WELL AS AN ENGINE OIL TANK. THIS WAS NECESSARY SO THAT A SUPPLY OF FRESH OIL WAS AVAILABLE TO REPLENISH OIL THAT WAS BURNED. (2 QUARTS PER HOUR)
(4) THIS INSPECTION ACCESS PLATE (CLEAR PLASTIC SHEET) WAS NOT INSTALLED ON ALL VE-7S.
(5) THE RUDDER CONFIGURATION SHOWN IS THAT USED ON THE PROTOTYPE AIRPLANE. THE RUDDER USED ON THE UO-1 WAS ALSO INSTALLED ON THE VE-7.
(6) THIS DRAG WIRE WAS NOT INSTALLED ON ALL VE-7S.
(7) SOME AIRPLANES HAD A CIRCULAR CUTOUT BETWEEN FORWARD AND AFT SPAR.
(8) LENGTH THIS STREAMLINING VARIED ON EACH AIRPLANE OF THIS TYPE.
(9) MANUALLY CONTROLLED RADIATOR SHUTTERS WERE FITTED ON ALL AIRPLANES PRODUCED AFTER THE PROTOTYPE.
(10) ON THE PROTOTYPE AIRPLANE A FIN SIMILAR TO UO-1 WAS EXPERIMENTALLY INSTALLED.
(11) AIRPLANE COULD BE FITTED FOR GUNNERY TRAINING BY SEALING FORWARD COCKPIT, USING A 30-CALIBER M.G. AND TELESCOPIC SIGHT.

VOUGHT VE-7
FUSELAGE: ENGINE COWLS ARE PRESSED SHEET ALUMINUM. INSPECTION PLATES PROVIDED FOR ACCESS TO INSTRUMENTS, FLIGHT CONTROLS AND TAIL SKID. FRAME HAS SPRUCE LONGERONS AND STRUTS, STEEL CABLE BRACING, AND STEEL FITTINGS. RECTANGULAR CROSS SECTION. ENGINE SECTION IS DEMOUNTABLE AS A UNIT. ENGINE COWLINGS LIGHT BLUE ENAMEL, FABRIC GRAY ENAMEL. FUSELAGE TRUSS FAIRED TOP AND BOTTOM.
SEATING: EACH COCKPIT UPHOLSTERED WITH IMITATION LEATHER. PLYWOOD SEATS. LEATHER COCKPIT COAMING.
WINDSHIELDS: CLEAR REINFORCED PLASTIC SHEET.
EMPENNAGE: FIXED DOUBLE CAMBERED HORIZONTAL STABILIZER. ELEVATORS DUAL CONNECTED. FIXED VERTICAL STABILIZER. AERODYNAMICALLY BALANCED RUDDER. ALL FRAMES OF STEEL TUBES WELDED OR BRAZED TOGETHER, WOOD RIB FILLED OVER TUBULAR STEEL AND ROUTED SPRUCE SPARS. STRUCTURE INTERNALLY BRACED WITH SWAGED CABLES AND ADJUSTABLE STEEL FITTINGS. ENTIRE EMPENNAGE COVERED WITH APPROVED COTTON FABRIC, FINISHED TO MATCH FUSELAGE COVERING.
TAIL SKID: PATENTED VOUGHT DESIGN, FLOATING TYPE, SEMI-UNIVERSAL AND SELF-ALIGNING IN ACTION. FITTED WITH RUBBER SHOCK ABSORBERS AND RENEWABLE METAL SHOE.
FACTOR OF SAFETY: UNIFORM FACTOR OF SAFETY OF 9 PLUS AT HIGH INCIDENCE CONDITION IN STATIC TESTS.
WEIGHT (GROSS): 2,000 POUNDS INCLUDING 525 POUNDS USEFUL LOAD AND 78 POUNDS ENGINE COOLING WATER.

VOUGHT VE-7
WINGS: CELLULE IS FOUR AILERON TYPE. TOP CENTER SECTION CUT AWAY FOR VISION. AIRFOIL R.A.F. 15. ANGLE OF INCIDENCE IS DIFFERENTIAL BETWEEN BETWEEN WINGS. WING CELLULE CONSISTS OF FIVE PANELS ASSEMBLED WITH SUBMERGED FITTINGS. WING SPARS OF SOLID I-BEAM ROUTED SPRUCE, REINFORCED AT PANEL POINTS. WING RIBS ARE UNIT ASSEMBLY TYPE. DOUBLE SWAGE WIRES IN INTERNAL DRAG TRUSS WITH ADJUSTABLE END FITTINGS. MAIN WING ATTACHMENT AND INTERPLANE STRUT FITTINGS ARE OF THE SUBMERGED TYPE. WINGS COVERED WITH LINEN, SEWED TO WING RIBS, AND TAPED. FIVE COATS ACETATE DOPE AND TWO COATS GRAY ENAMEL. INTERPLANE STRUTS OF SOLID SPRUCE STREAMLINE CROSS SECTION. WIRE BRACING IS ROEBLING 19-STRAND, ADJUSTABLE TURNBUCKLES. FLYING WIRES DOUBLE, LANDING WIRES SINGLE.
LANDING GEAR: VOUGHT VEE STRUT DUAL WHEEL TYPE. DETACHABLE BY REMOVAL OF PINS AT FUSELAGE FITTINGS. WHEELS 26 X 4 WIRE SPOKE TYPE. STEEL STUB AXLES OPERATE IN METAL GUIDES, FLOATING TYPE SHOCK ABSORBERS OPERATE IN STEEL GUIDE. AXLES, SPREADER BAR, AND SHOCK ABSORBERS STREAMLINED IN PRESSED METAL HOUSING. STRUTS OF ASH AND RUBBER CORD COTTON SHEATHED 5/8" DIAMETER. METAL PARTS FINISHED IN BLACK ENAMEL, WOOD STRUTS WITH THREE COATS CLEAR VARNISH. WHEELS STREAMLINED WITH FABRIC, DETACHABLE COVERS.

CHANCE VOUGHT VE-7 & UO-1

(SHEET NO.1)

(DRAWN FOR MODEL AIRPLANE NEWS BY WILLIS L. NYE)

VOUGHT VE-7

THE CHANCE VOUGHT VE-7 WAS DESIGNED AS AN ENTRANT IN THE U.S.ARMY ADVANCED TRAINER COMPETITION HELD IN 1917. THE FIRST EXPERIMENTAL AIRPLANE WAS SUBMITTED FOR TESTING BY ARMY AUTHORITIES IN 1918. THE VE-7 WON THE COMPETITION AND WAS ORDERED INTO PRODUCTION BY THE PARENT COMPANY AND TWO LICENSEES, THE SPRINGFIELD AIRCRAFT CO. AND THE B.F. STURTEVANT COMPANY. TWENTY VE-7 PLANES WERE DELIVERED BY THE END OF WORLD WAR I. IN 1922-23 YEARS 27 VE-9 AIRPLANES WERE PROCURED BY THE U.S.ARMY AIR SERVICE.

THE AIRPLANE WAS FINISHED IN SILVER PIGMENTED LACQUER. SHADED AREAS GRAY. ENGINE AND TIRES IN BLACK.

NAVY VOUGHT VE-9

THIS AIRPLANE WAS AN IMPROVED VERSION OF THE VE-7 MODEL BUILT FOR THE U.S.ARMY. THE VE-9 WAS ADAPTED FOR LAND OR WATER OPERATION. THE VE-9 WAS THE FIRST AMERICAN DESIGNED SHIPBOARD AIRPLANE THAT COULD BE LAUNCHED FROM A CATAPAULT. THE FUSELAGE WAS STRENGTHENED FOR ROUGH WATER LANDING AS WELL AS THE IMPACT OF CATAPAULT LAUNCHING. TWO AIRPLANES OF THIS TYPE WERE ASSIGNED TO EACH BATTLESHIP FOR SCOUTING AND GUNFIRE SPOTTING.

ENGINE INSTALLATION: WATER COOLED, AEROMARINE MANUFACTURE, 250 H.P. MODEL U-873.

FUSELAGE: STRENGTHENED SPRUCE LONGERONS AND STRUTS AND STEEL CABLES AND FITTINGS.

SEATING: SAME AS VE-7.

WINDSHIELDS: SAME AS VE-7.

EMPENNAGE: SAME AS VE-7, EXCEPT INCREASED VERTICAL STABILIZER AREA.

FACTOR OF SAFETY: SAME AS VE-7.

WEIGHT: IN EXCESS OF VE-7.

WING CELLULE: IDENTICAL TO VE-7. CENTER SECTION OF UPPER WING REINFORCED FOR HOISTING PURPOSES.

FLIGHT CONTROLS: SAME AS VE-7.

FUEL SYSTEM: IMPROVED OVER VE-7.

DESIGN NOTES VOUGHT VE-9

1. AEROMARINE TYPE ENGINE VEE CYLINDER BLOCK. WAS NOT SUCCESSFUL AS AN ENGINE TYPE.
2. PROPELLER 8'-4" DIAMETER LAMINATED TYPE.
3. WING TIP FLOAT TYPE USED ALSO ON EARLY MODELS OF UO-1. (ALUMINUM ALLOY STRUCTURE)
4. FIN INCREASED IN AREA AS REQUIRED WHEN PONTOONS ARE INSTALLED. (ADJUSTABLE SETTING)
5. PONTOON CONSISTS OF SPRUCE FRAMES AND LONGITUDINAL MEMBERS AND LAMINATED MAHOGANY PLYWOOD (2 LAYERS) AT 90° DIRECTION OF GRAIN TO EACH OTHER.
6. WIND-DRIVEN GENERATOR FOR RADIO TRANSMITTER WITH LOW AND HIGH VOLTAGE OUTPUT.
7. ARRESTING HOOK OMITTED ON SEAPLANES.
8. THIS BRACE CABLE USED ON VE-9 ONLY, AND EARLY PRODUCTION UO-1 AIRPLANES.
9. THIS BRACE CABLE USED ON VE-9 SEAPLANES ONLY.
10. THIS TYPE OF FLOAT STERN USED ON VE-9 SEAPLANES ONLY.
11. STREAMLINE SPRUCE STRUTS.
12. REAR COCKPIT WAS ADAPTABLE FOR GUNNERY.
13. ORIGINAL IDENTIFICATION MARKS WERE RED, WHITE AND BLUE ROUNDELS. (1918).

BRACE WIRES ARE IN PLANE OF FRONT AND REAR WING SPARS

MAGNETIC COMPASS

WING CELLULE AND STRUCTURAL CONFIGURATION SAME FOR VE-7, VE-9 AND UO-1 SERIES

WRIGHT J-4 RADIAL AIRCOOLED ENGINE

BRASS PROPELLER TIP

WIND-DRIVEN DUAL VOLTAGE RADIO GENERATOR

2'-6" 4'-9" 6'-7"

INSIGNIA

1.25° DIHEDRAL

TIE

WING TIP PONTOON BRACING

6'-5"

GAP 4'-8"

AILERON LINK CABLE

1.25° DIHEDRAL

STREAMLINE STRUTS

LANDING WIRES

SEE FLOAT INSTALLATION SHEET NO.1.

WALKWAY

DRAG WIRE

FLYING WIRES-DOUBLE

SPRUCE STRUTS

ANNULAR ENGINE EXHAUST MANIFOLD

UO-1

(U.S.NAVY SHIPPLANE)

ORIGINAL FLOAT INSTALLATION

FLOAT INSTALLATION ON LATE PRODUCTION PLANES

SAME STRUT CONFIGURATION ON VE-9

SAME PONTOON CROSS SECTION ON FU-1

STERN SECTION VE-9 ONLY

SAME AREA AND HORIZONTAL TAIL USED ON VE-7, VE-9, AND UO-1, AND FU-1.

4'-1" 2'-2" 1'-11"

5'-0"

10'-0"

LIFT TYPE HORIZONTAL STABILIZER

FAIRLEAD

ELEVATOR CONTROL CABLES(2)

RUDDER CONTROL CABLE

WING FITTING

RUDDER 30° RIGHT-LEFT

FABRIC COVERING

ELEVATORS - 20° UP-DOWN

PROCURED IN QUANTITY IN 1918 FOR U.S.ARMY AIR SERVICE.(MODEL VE-7)
LIMITED PROCUREMENT IN 1920 FOR U.S.NAVY(MODEL VE-9).
LIMITED PROCUREMENT IN 1921 FOR U.S.MARINES (VE-9 HISPANO-SUIZA)

FUEL QUANTITY GAUGE

POWER AIR PUMP INDUCTION MANIFOLD

FILLER CAP

FUEL SHUT-OFF VALVE

AIR PRESSURE INDICATOR

HAND AIR PUMP

FUEL PRIMER

THROTTLE

PILOT

PET COCK

FUEL TANK

13 GALS.

FUEL TANK

15 GALS.

NO.26 TERNE PLATE

CARBURETOR

FUEL DRAIN

AIR RELIEF VALVE

FUEL SHUT-OFF VALVE

FUEL STRAINER

FUEL SYSTEM

(GRAVITY-AIR PRESSURE TYPE-VE-7 & VE-9)

FIXED SURFACE -1.25° ANGLE OF INCIDENCE TO THRUST LINE

U.S.NAVY SERIAL NO.

VE-7

(U.S.ARMY TRAINER)

WASHED OUT WING TIP

SAME WING PLANFORM ON VE-7, VE-9, AND UO-1

FORMER RIBS

RED WHITE BLUE

13

HISPANO-SUIZA TYPE "E"	
RATED H.P.	180
RATED R.P.M.	1800
BORE	4.72"
STROKE	5.11"
DRY WEIGHT	476"
COMPRESSION	5.33

DRAG WIRE

HISPANO-SUIZA MODEL "A" AND "E" WERE INTERCHANGEABLE

34'-2"

2'-6"

HISPANO-SUIZA WATERCOOLED ENGINE - MODEL "A" 150 H.P.

VE-7 DESCRIPTION	
WING AIRFOIL	R.A.F.15
WING AREA(2)	285 SQ.FT.
STAB. AREA	18 SQ.FT.
ELEV. AREA(2)	17 SQ.FT.
AIL'N AREA(4)	39 SQ.FT.
FIN AREA	23 SQ.FT.
RUDDER	8.4 SQ.FT.
WT. EMPTY	1560 LBS.
WT. LOADED	2100 LBS.
WT. SQ.FT.	7.4 LBS.
WT. H.P.	11.6 LBS.
CLIMB 6500'	9.25 MIN.
CLIMB 10,000'	17.00 MIN.
SERV. CEILING	16,000'
DURATION	2.33 HRS.
MAX. SPEED 5,000'	111 M.P.H.
MAX. SPEED 10,000'	100 M.P.H.
LANDING SPEED	40 M.P.H.

ANGLE OF INCIDENCE TOP WING 1.75°

ANGLE OF INCIDENCE BOTTOM WING 2.25°

AILERON MOVEMENT UP-DOWN 20°

1'-6" 3'-9" 4'-8" CHORD 11" 5'-7"

MAGNETIC COMPASS
BRACE CABLE
CARBURETOR AIR INDUCTION
RADIATOR CAP
FUEL FILLER
AILERON LINK CABLE
INSTRUMENT PANEL ACCESS STORAGE COMPARTMENT
FAIRED TURTLEDECK ALUMINUM ALLOY FAIRING
STEEL PROPELLER HUB
WRIGHT E-2 180 H.P. ENGINE
TRAILING RADIO ANTENNA WEIGHT
A-6698 U.S.NAVY
Aeroplanes VOUGHT
1'-10" 2'-4"
2'-6"
4'-3"
POLISHED ALUMINUM ALLOY RADIATOR SHELL
WALNUT PROPELLER
DRAIN PLUG
MOORING BIT
U.S.S. OKLAHOMA 2
STEP
CONTROL STICK ACCESS PANEL
AILERON CONTROL HORN
U.S.NAVY SQUADRON MARKING
DRAIN PLUG RING
ARRESTING HOOK
RED WHITE BLUE

8/2

MODEL VE-9 FITTED WITH A LANDING GEAR AND EQUIPPED WITH ARRESTING DEVICES WAS THE FIRST NAVAL SERVICE TYPE TO LAND ON THE U.S.S LANGLEY, THE U.S.NAVY'S FIRST AIRCRAFT CARRIER UNDER WAY AT SEA.

12" 1'-4" 2'-0" 2'-3"

CHINE
WALKWAY
DOUBLER

FOR CARRIER OPERATIONS A VE-7 LANDING GEAR WAS INSTALLED

LOAD WATERLINE

VE-9

(U.S.NAVY SHIPPLANE)
(PROCURED IN 1921)

(HEIGHT SCALE) 0. 1. 2. 3. 4. 5. 6. 7. 8. 9. 10.

(LENGTH SCALE) 0. 1. 2. 3. 4. 5. 6. 7. 8. 9. 10. 11. 12. 13. 14. 15. 16. 17. 18. 19. 20. 21. 22. 23. 24. 25. 26. 27

THE FLOAT BRACING IS RIGGED IN SUCH A WAY THAT WHEN THE AIRPLANE IS FLYING, THE LONGITUDINAL CENTERLINE OF THE FLOAT IS 6° INCIDENCE TO THE THRUST LINE.

MAIN PONTOON COVERED WITH 2-PLY PLYWOOD. PLIES AT 45° TO EACH OTHER.

THANKS IS EXTENDED TO THOSE THAT ASSISTED TO MAKE THIS PRESENTATION POSSIBLE:
WILLIAM LARKINS, SECRETARY, AMERICAN AVIATION HISTORICAL SOCIETY.
ESTHER B. MUELLER, AIR FORCE CENTRAL MUSEUM, TECHNICAL SERVICES DIVISION, REFERENCE BRANCH.
RANDOLPH BRANDT-PHOTO COLLECTION.
ARTHUR SCHOENI, CHANCE VOUGHT AIRCRAFT.
WILLIAM MIER, CHANCE VOUGHT AIRCRAFT.
F.E.DALLY, CAP'T. U.S.N., TECHNICAL DATA DIVISION, BUREAU OF AERONAUTICS, U.S.NAVY.

(DRAWN FOR MODEL AIRPLANE NEWS BY WILLIS L. NYE)

CHANCE VOUGHT

(SHEET NO. 2)

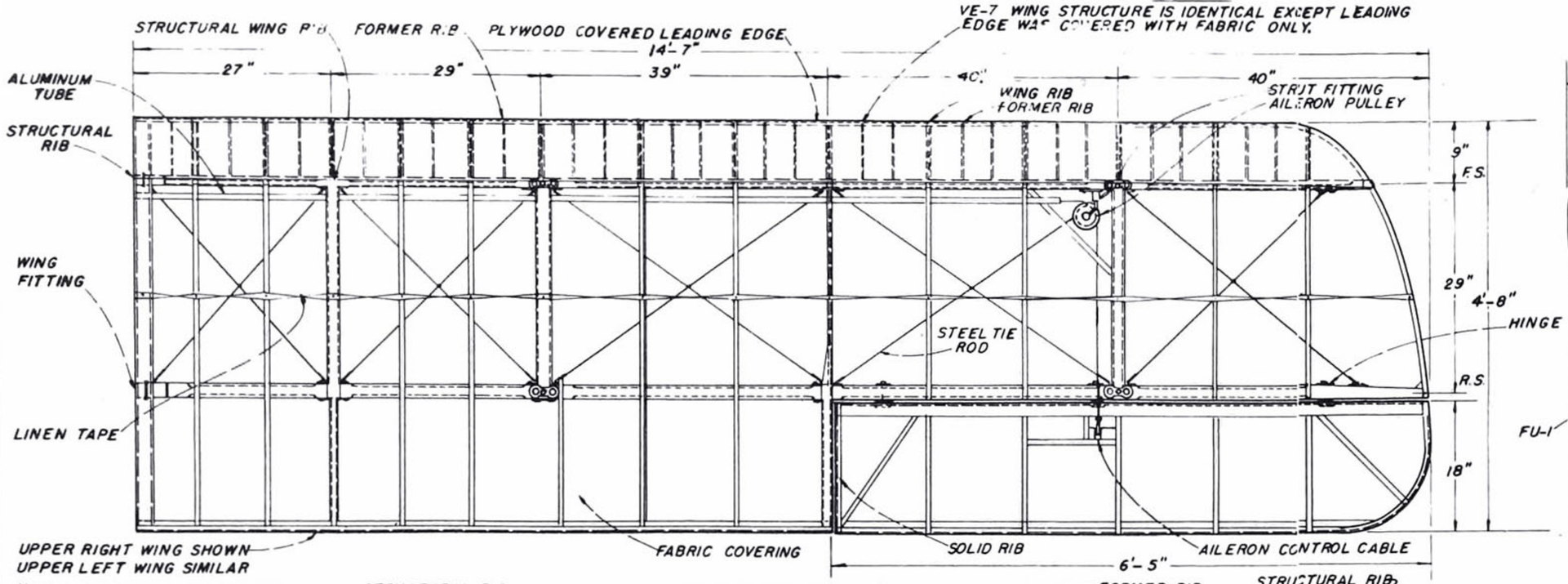

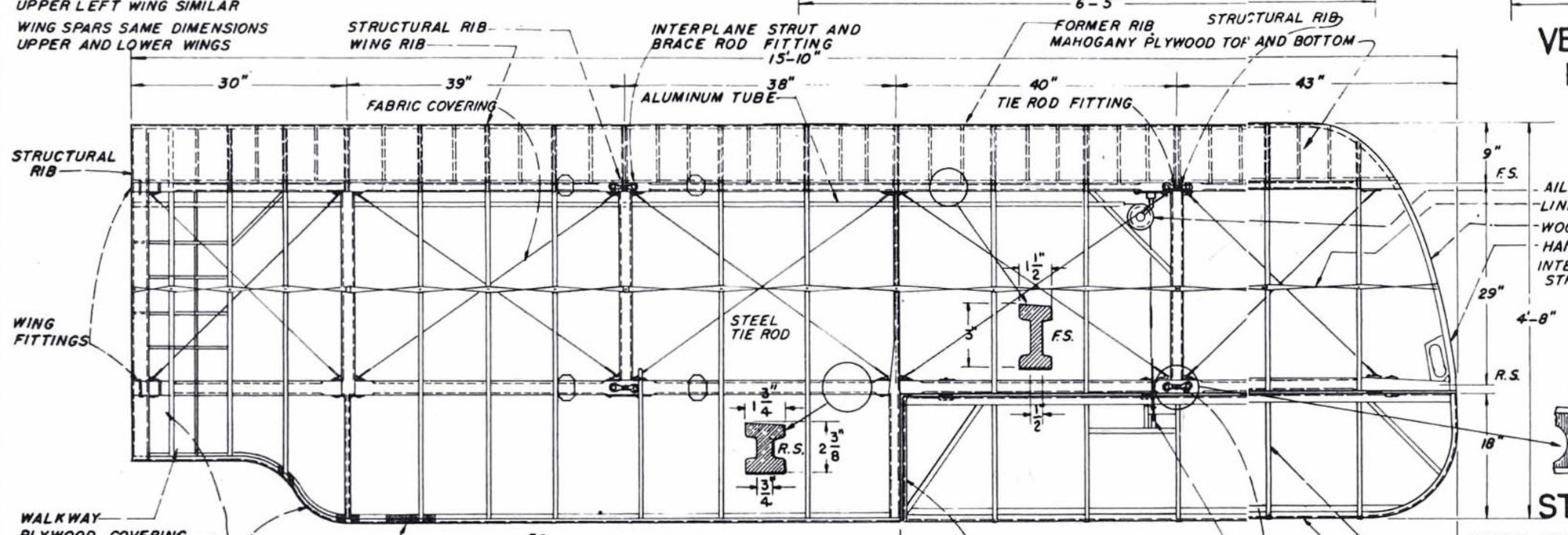

WINGS
UO-1 OR VE-7 (SEE NOTE)

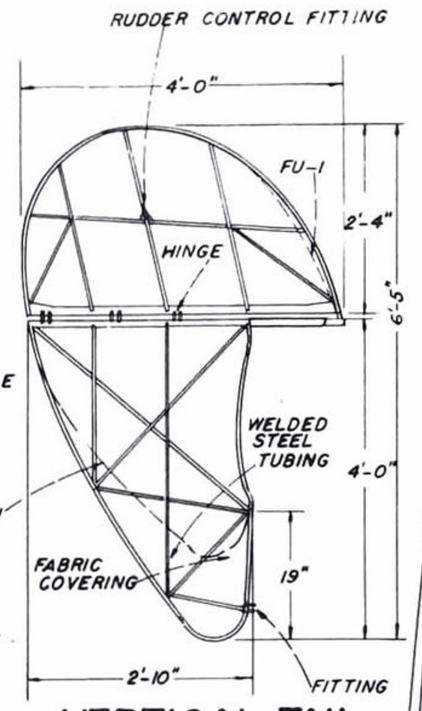

VERTICAL TAIL
FU-1 OR UO-1

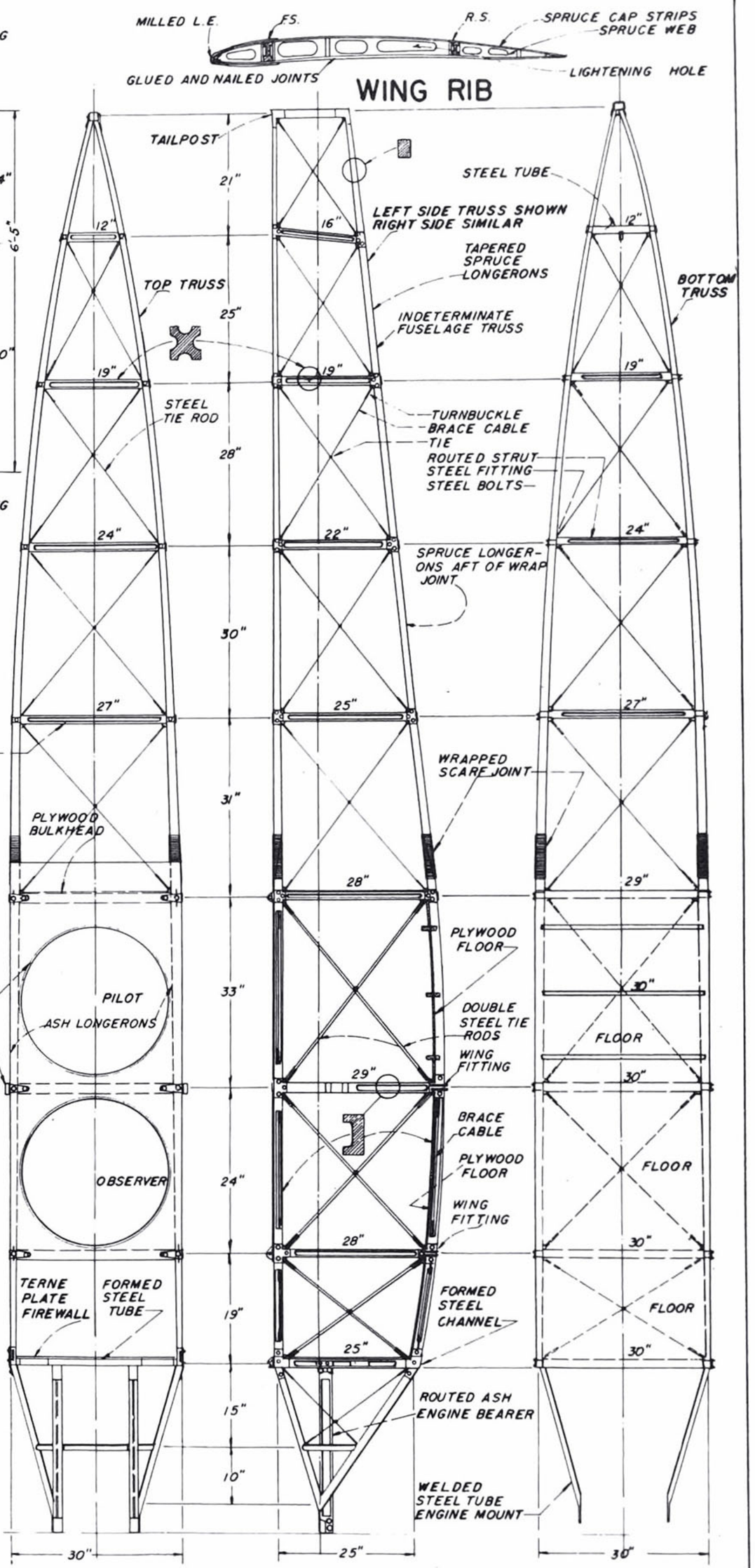

STRUT FITTING

FUSELAGE
VE-7

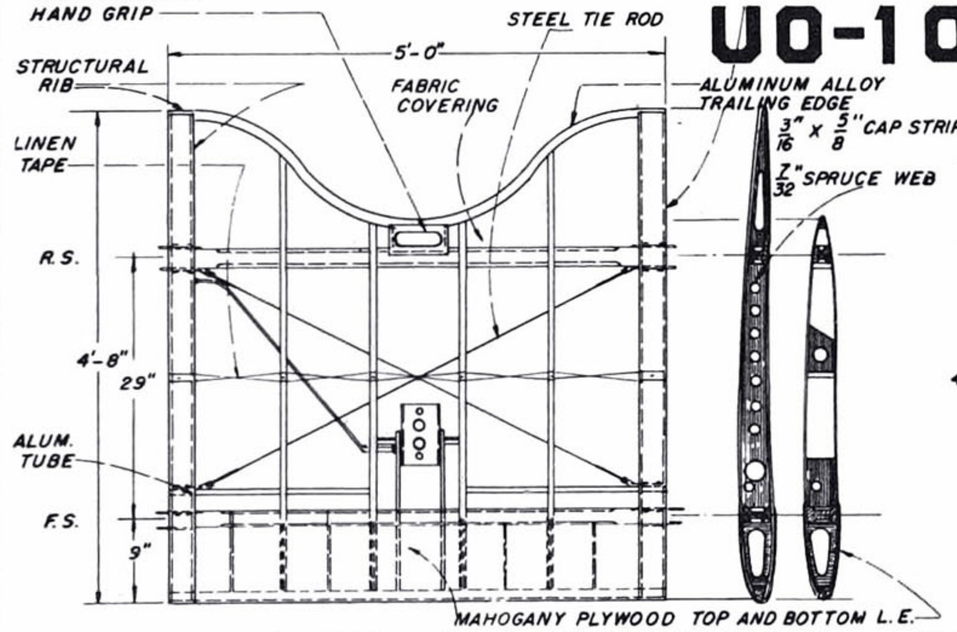

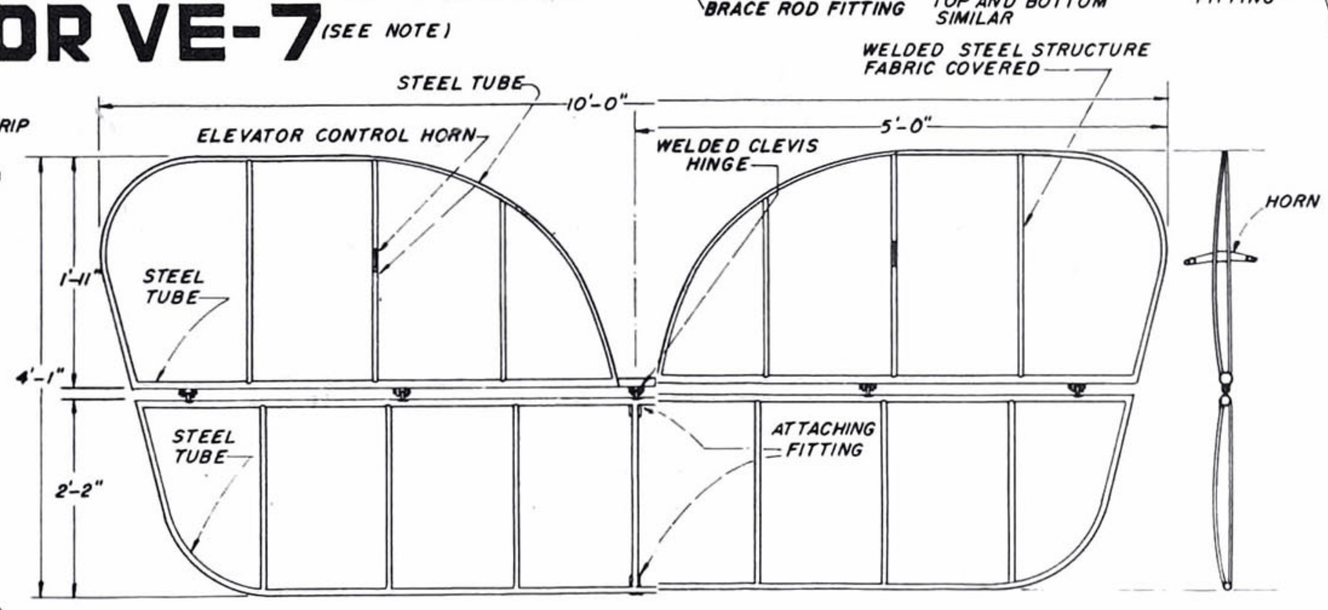

CENTER SECTION
UO, FU, VE

HORIZONTAL TAIL SURFACES
UO OR FU-1

CHANCE VOUGHT

(DRAWN BY WILLIS L. NYE FOR MODEL AIRPLANE NEWS)

VE-7

(DRAWN FROM PHOTO)
1918 PROTOTYPE)

WATER FILLER
CARBURETOR AIR INDUCTION
EXPANSION TANK
HAND AIR PUMP
INSTRUMENT PANEL
ALUMINUM ALLOY HEAD STREAMLINING
SPLICE
PLYWOOD
SPRUCE STRINGERS AND PLYWOOD FORMERS
TAPERED SPRUCE LONGERONS
STEEL TUBE RUDDER AND VERTICAL STABILIZER STRUCTURE—BRAZED JOINTS AND FABRIC COVERING
THROTTLE
BOOSTER MAGNETO
DIAGONAL TRANSVERSE STEEL TIE RODS
CONTROL CABLE FAIRLEAD
150 H.P. ENGINE WATER COOLED
FUEL TANK
OBSERVER
PILOT
SEAT
SEAT
MAIN FUEL TANK
CENTERING SPRING
ASH TAIL SKID
CLEVIS HINGE
RUBBER SHOCK CORD
STEEL TIE ROD
FABRIC COVERING
CONTROL CABLES
PULLEY
ROUTED STRUT
BOLTED FITTING
SPLICE
JOY STICK(DUAL)
QUADRANT
AILERON TORQUE TUBE
RUDDER BAR(DUAL)
FIRE EXTINGUISHER(DUAL)
BOLTED FITTING
TERNE PLATE FIREWALL
DOUBLE TIE RODS
BOLTED FITTING
ASH STRUT
STEEL FITTING
LANDING GEAR SPREADERS
PIVOT TUBES
FAIRING
AXLE

THIS TYPE LANDING GEAR USED INTERCHANGEABLY ON MODELS UO-1 AND FU-1. THE LANDING GEAR ON THESE MODELS WAS EQUIPPED WITH ARRESTING DEVICES.

DESIGN NOTES— VOUGHT AIRPLANES

THE BASIC STRUCTURAL AND AERODYNAMIC DESIGN EMBODIED IN THE VENERABLE MODEL VE-7 WAS THE CRITERION OF DESIGN FOR THE LATER VE-9, UO-1,2,3, AND THE FU-1. EACH OF THESE AIRPLANES EMPLOYED SAME GENERAL WING, FUSELAGE, TAIL SURFACES, AND LANDING GEAR ASVE-7. HOWEVER, IMPROVEMENTS IN MATERIALS AND IN DETAIL DESIGN PLUS MORE POWERFUL AIRCOOLED ENGINES IMPROVED THE OVERALL PERFORMANCE. VOUGHT SEAPLANES SERVED WITH BATTLESHIPS AND CRUISERS OF THE U.S. NAVY ALL OVER THE WORLD. OTHER PLANES OF THE TYPE SERVED WITH U.S. COAST GUARD AND CUBAN AIR FORCE.

BANK INDICATOR AIR PRESSURE
AIR SPEED
ALTIMETER
OIL PRESSURE
ENGINE R.P.M.
AIR PUMP
THROTTLE
MAGNETO SWITCH
FUEL PRIMER
WATER TEMPERATURE
BOOSTER MAGNETO CRANK
BOOSTER SWITCH

VE-7 INSTRUMENTS
(PILOT'S COCKPIT)

ELEVATOR HORN
STEEL TUBE
SPRUCE RIBS
BRAZED JOINTS
STEEL TUBE TRAILING EDGE
STEEL TUBE ELEVATOR SPAR
SPRUCE RIBS
SPRUCE SPAR
SPRUCE FORMER RIB
STEEL TUBE FRAME

VE-7 TAIL

4'-1"
2'-2"
1'-11"
10'-0"
RUDDER CONTROL CABLE
ELEVATOR CONTROL CABLE
FAIRLEAD
ELEVATOR MOVEMENT 20° UP-DOWN
RUDDER MOVEMENT 30° RIGHT-LEFT
RESTRICTED ANGLE OF VISION
AILERON INTERCONNECTING CABLE
TELESCOPIC GUN SIGHT
FUEL TANK FILLER
N-9 AIRFOIL
SPRUCE STRUT
LIFT TYPE HORIZONTAL STABILIZER—FABRIC COVERING—NON-ADJUSTABLE
ELEVATOR CONTROL HORN
HINGED ACCESS TO INSTRUMENTS
5'-0"
2'-7"
2'-5"
ALUMINUM ALLOY COVERING
GUN PORT
WRIGHT WHIRLWIND J-5 SUPERCHARGED AIRCOOLED ENGINE 225 H.P.
WOOD PROPELLER
MAGNETO
ALUMINUM ALLOY SPINNER
THRUST LINE
ALUMINUM ALLOY HEAD REST
NAVY SERIAL NO.
NAVAL PLANE MARKING
FABRIC COVERING
FAIRING STRIP
A-7363
2'-7"
4'-0"
34'-2"
9°
7'-6"
REMOVABLE PANEL
SUPERCHARGER AIR DUCT
STREAMLINE SPRUCE STRUT
CLEAT
MOORING RING
4'-3"
STEP
4"
DRAIN PLUG
31°
6°
ALUMINUM ALLOY FUEL TANK
STEP
STREAMLINE SPRUCE STRUT
ALUMINUM ALLOY BRACE STRUT
ALUMINUM ALLOY PONTOON
WALKWAY
TWO-PLY PLYWOOD PONTOON COVERING
LOAD WATERLINE
DRAIN PLUG
12"
1'-5"
1'-5"
2'-4"
12"
0
CHINE
WALKWAY
STEP
(SCALE)
10'-10"
8'-2"
0. 1. 2. 3. 4. 5. 6. 7. 8. 9. 10. 11. 12. 13. 14. 15. 16. 17. 18. 19. 20. 21. 22. 23. 24. 25. 26. 27. 28.
(SCALE)
6'-5"
1'-6"
4'-8"
ACCESS PANEL
CONTROL CABLES
FABRIC COVERED VERTICAL STABILIZER AND RUDDER
RED
WHITE
BLUE

2-F-11

U.S. NAVY

DESIGN NOTES FU-1

(1.) BRACE WIRES DIFFER FROM UO-1.
(2.) FUSELAGE STRUCTURE ON FU-1 SAME AS UO-1, REINFORCED FOR CATAPAULT LAUNCHING.
(3.) TWO TYPES OF WING TIP FLOATS WERE SUPPLIED BY NAVAL AIRCRAFT FACTORY, I.E. TYPE SHOWN AND FLOAT SHOWN ON VE-9 BUT BRACED AS SHOWN AT LEFT WING OF MODEL UO-1 FRONT VIEW.
(4.) FUSELAGE FAIRED TO ELLIPTICAL CROSS SECTION.

FU-1
(20 PLANES OF THIS TYPE PROCURED BY U.S. NAVY)

THE AIRPLANE WAS FINISHED IN SILVER PIGMENTED LACQUER. SHADED AREAS WERE LIGHT GRAY. TIRES AND ENGINE IN BLACK.

WING FITTING
REINFORCEMENT TO PERMIT HOISTING OF AIRPLANE ON BOARD SHIP
MULTI-VOLTAGE WIND-DRIVEN SINGLE BLADE RADIO GENERATOR
FABRIC COVERING
BRASS TIPPED PROPELLER
WALKWAY
MAGNETO
FLYING WIRES
WRIGHT 200 H.P. WHIRLWIND J-4 ENGINE
RED
WHITE
BLUE

UO-1
(FU-1 IS SIMILAR)

VOUGHT FU-1

THE MODEL FU-1 WAS USED AS A TRAINER FOR FIGHTER PILOTS. IT WAS ADAPTABLE FOR CARRIER OPERATIONS BY THE INSTALLATION OF A LANDING GEAR SIMILAR TO THAT OF VE-7 EXCEPT BEING EQUIPPED WITH BRAKES AND ARRESTING HOOK. THIS WAS FIRST NAVAL AIRPLANE WITH AN AIRCOOLED ENGINE TO HAVE A SUPERCHARGER. ENGINE HAS AN ELECTRIC AS WELL AS AN INERTIA STARTER. (MANUAL OPERATION). ARMAMENT CONSISTED OF 2 30-CALIBER MACHINE GUNS SYNCHRONIZED TO FIRE THROUGH THE PROPELLER AND BOMB RACKS ON THE UNDERSIDE OF LOWER WINGS. THE GUNS WERE MANUALLY CHARGED. THE HIGH SPEED AT 20,000 FEET WAS 150 M.P.H. SERVICE CEILING IS 28,000 FEET. SEA LEVEL HIGH SPEED WAS 130 M.P.H. THIS AIRPLANE WAS A DEVELOPEMENT OF THE "UO" TYPE.

CHANCE VOUGHT

(SHEET NO. 4)

(DRAWN FOR MODEL AIRPLANE NEWS BY WILLIS L. NYE)

Curtiss Jenny JN-4—JN-6H.

drawings by JOSEPH NIETO

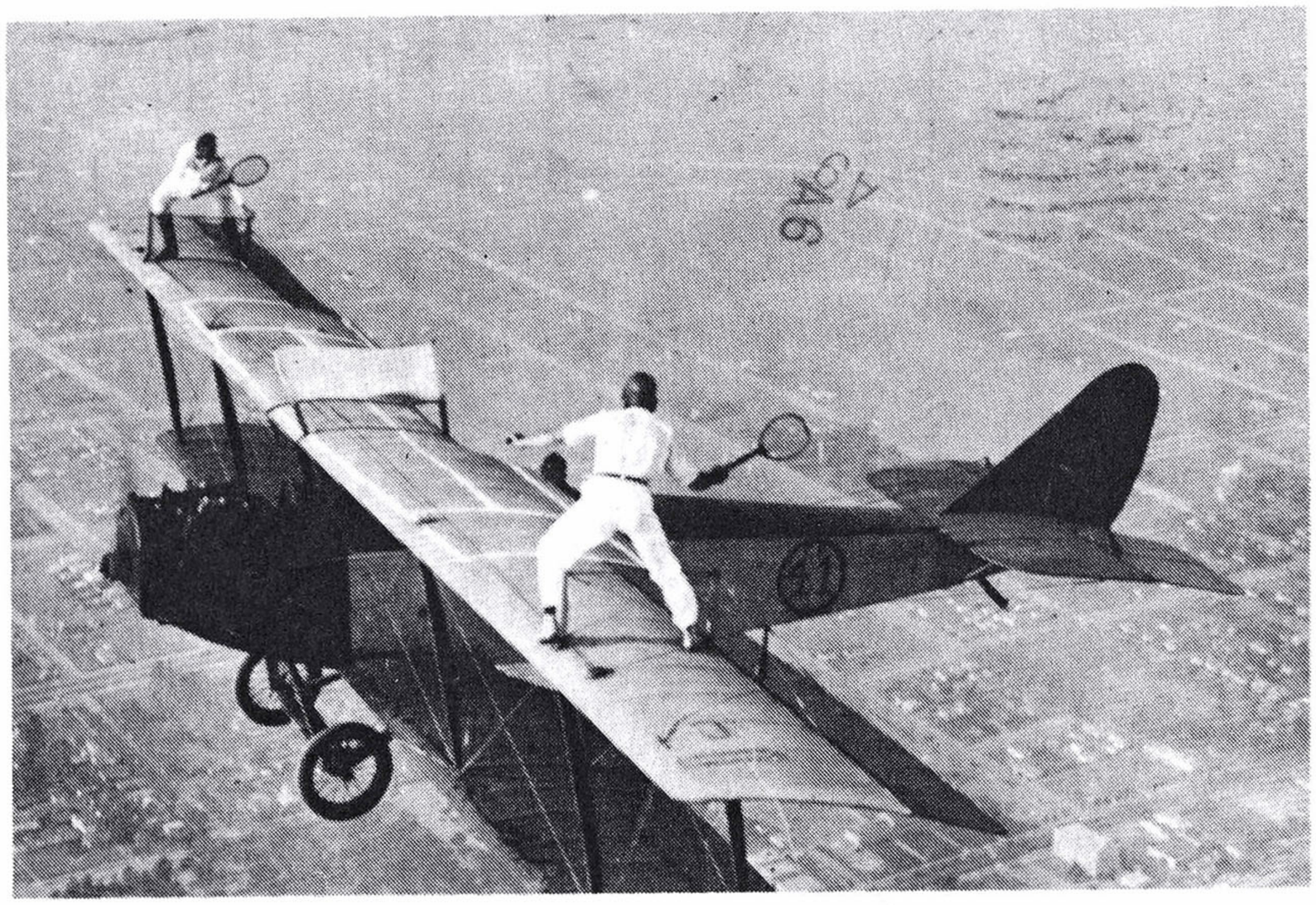

Photo courtesy of UPI.

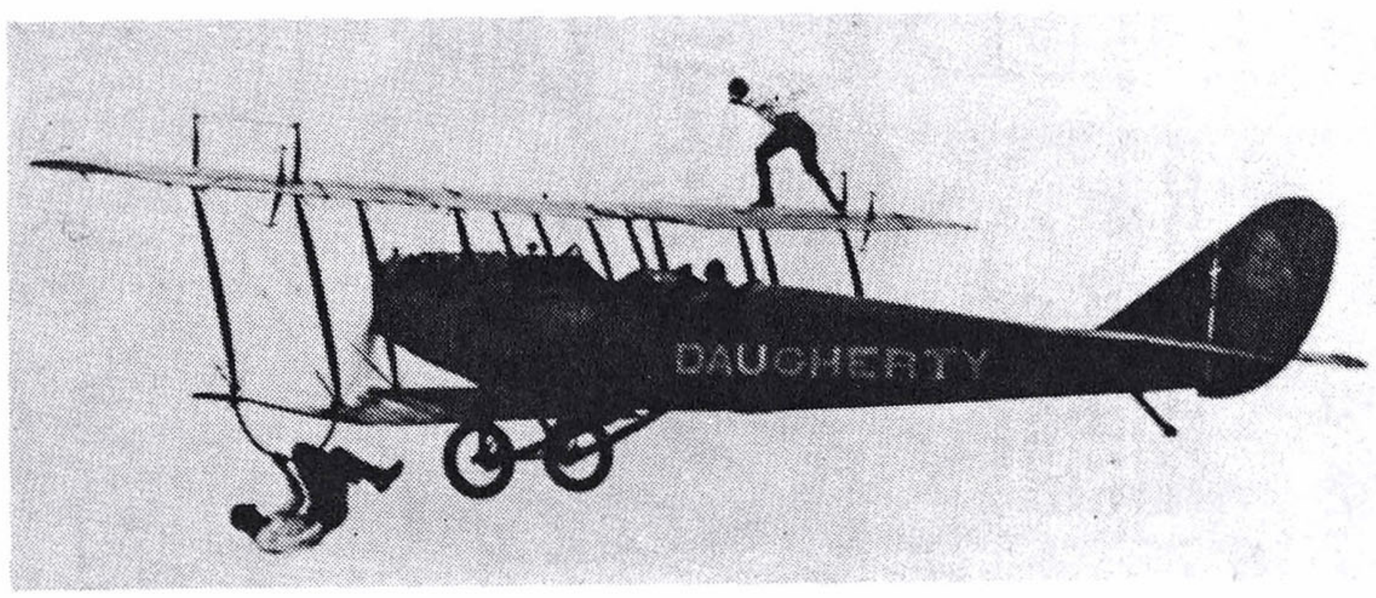

"Flying the World's Great Aircraft" photo.

The Jenny was purely American. Produced in great quantities (over 4,500) for that period, Curtiss was helped in the effort by many subcontractors in Canada and the British Empire.

There used to be a saying, "If you can fly a Jenny, you can fly anything." She had her shortcomings, yet she would give novice pilots more than an even break. She was designed to teach men to fly and nothing more was ever expected of her.

However clear-cut the Jenny's wartime purpose may have been, her greatest fame actually came in the post-war years of the 1920s. By sheer numbers she invaded—and took over—the initial phases of American aviation. She flew the first regular airmail schedule and became the first readily available private plane.

To those who teethed on a Jenny there is something magical in recalling the feel of air pressure on her elevators or rudder, of the throbbing of her OX-5 engine pulling her out of a dirt field, of every rib, strut, and wire vibrating in unison, of fabric dancing to the same beat as she bored her way to history. There is no pilot who has put in time in a Jenny who will not admit, "Verily, *there* was an airplane!"

Many survive—several are still flying.□

The Curtiss Jenny served as a trainer, a barn stormer, a mailplane, and was used extensively in early Hollywood films.

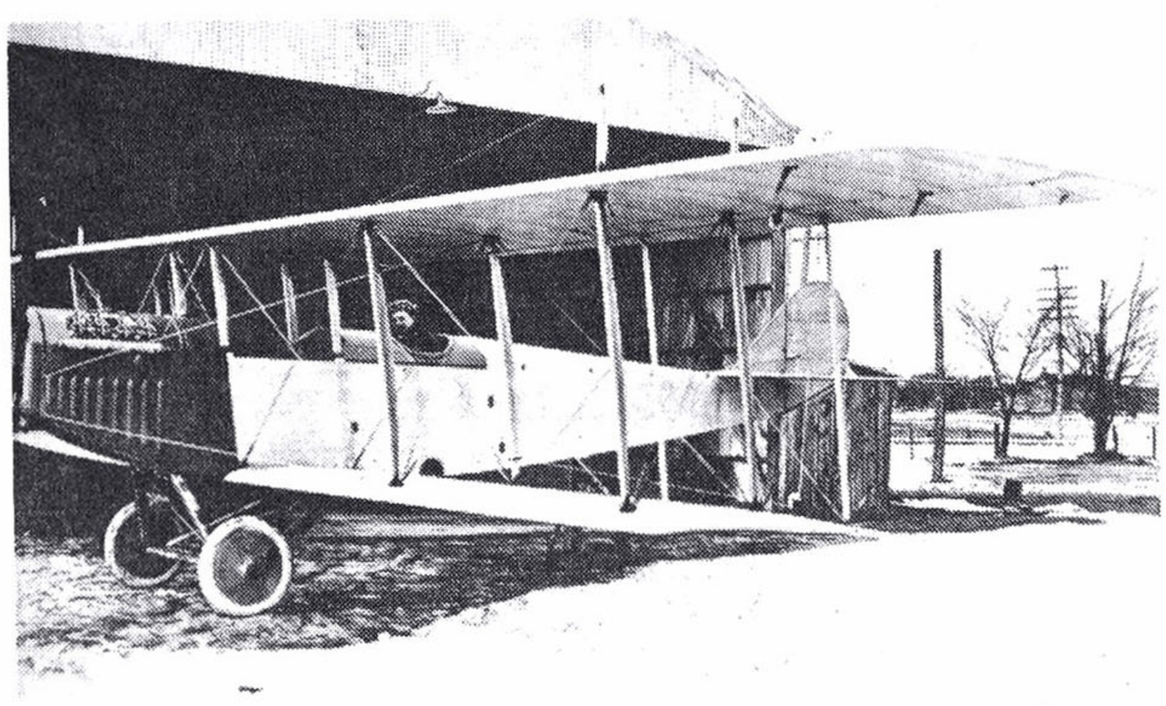

"U.S. Airmail Service" photo.

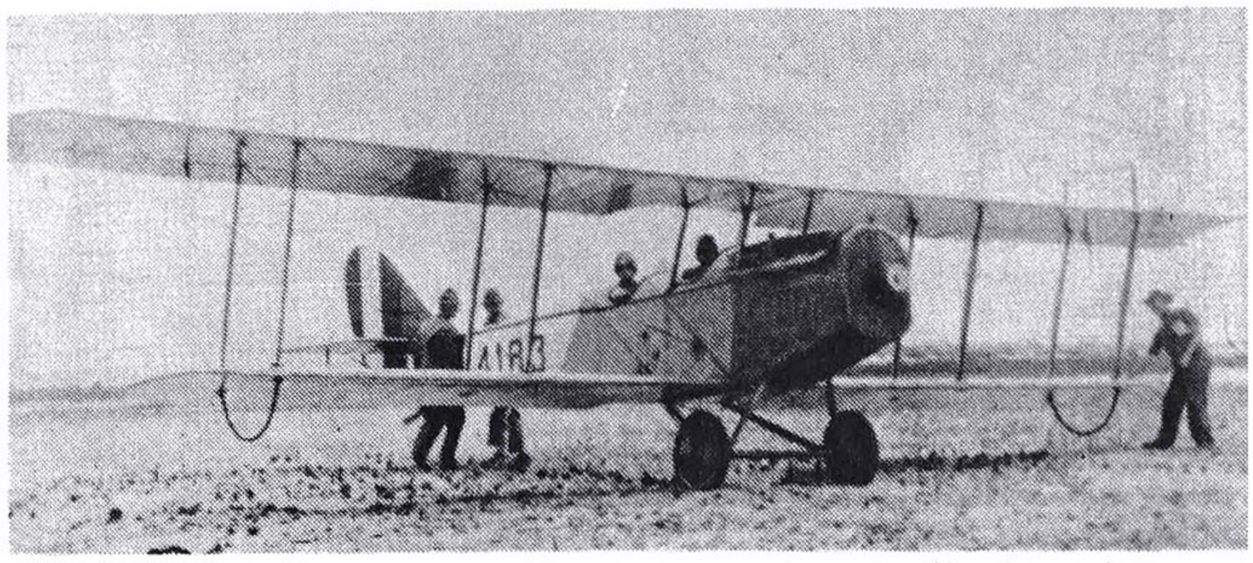

U.S. Navy photo.

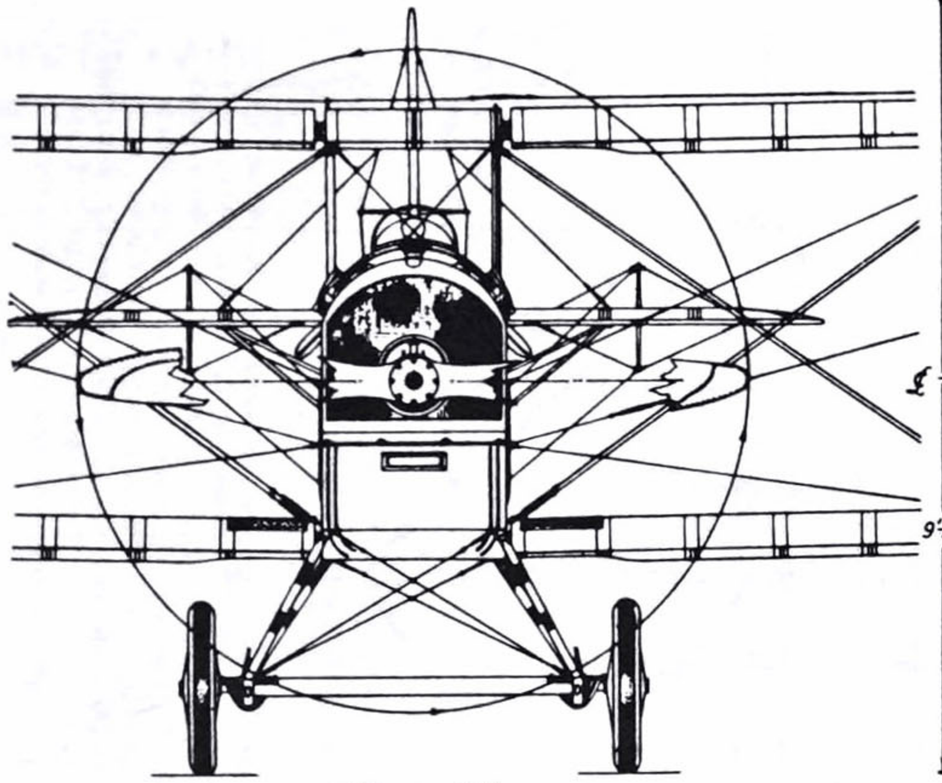

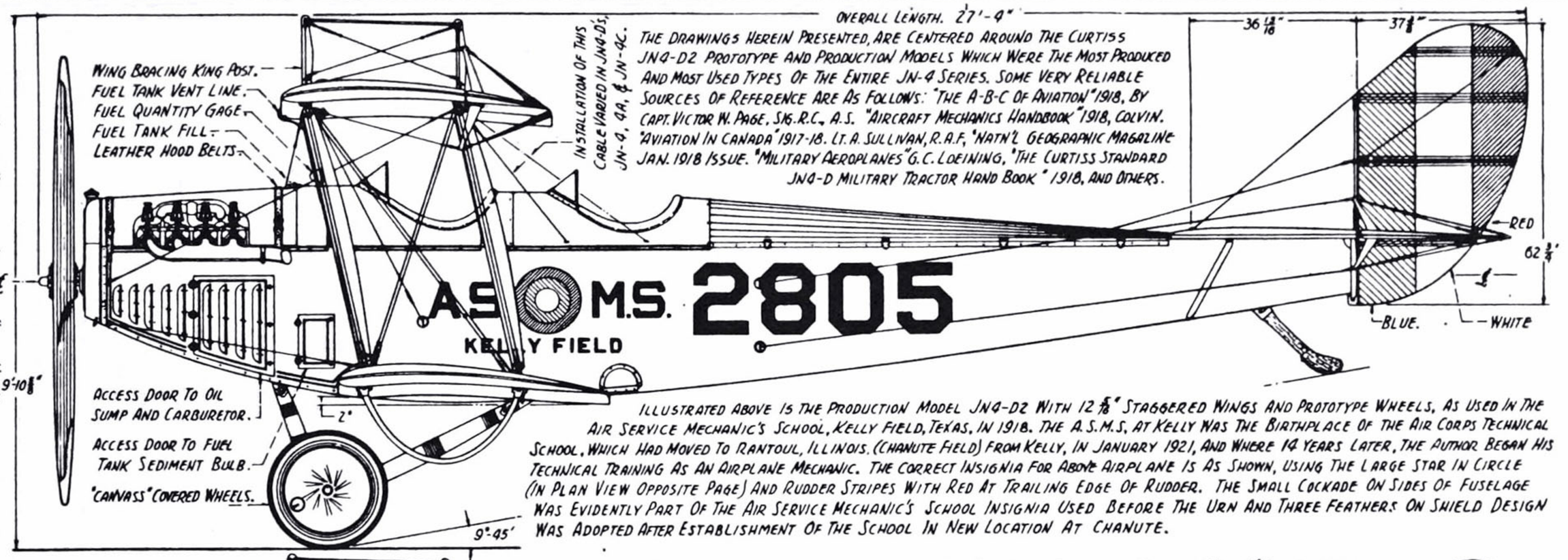

The Drawings Herein Presented, Are Centered Around The Curtiss JN4-D2 Prototype And Production Models Which Were The Most Produced And Most Used Types Of The Entire JN-4 Series. Some Very Reliable Sources Of Reference Are As Follows: "The A-B-C Of Aviation" 1918, By Capt. Victor W. Page, S.M.S.R.C., A.S. "Aircraft Mechanics Handbook" 1918, Colvin. "Aviation In Canada" 1917-18. Lt. A. Sullivan, R.A.F. "Nat'l. Geographic Magazine" Jan. 1918 Issue. "Military Aeroplanes" G.C. Loening, "The Curtiss Standard JN4-D Military Tractor Hand Book" 1918, And Others.

Illustrated Above Is The Production Model JN4-D2 With 12 5/16" Staggered Wings And Prototype Wheels, As Used In The Air Service Mechanic's School, Kelly Field, Texas, In 1918. The A.S.M.S. At Kelly Was The Birthplace Of The Air Corps Technical School, Which Had Moved To Rantoul, Illinois. (Chanute Field) From Kelly, In January 1921, And Where 14 Years Later, The Author Began His Technical Training As An Airplane Mechanic. The Correct Insignia For Above Airplane Is As Shown, Using The Large Star In Circle (In Plan View Opposite Page) And Rudder Stripes With Red At Trailing Edge Of Rudder. The Small Cockade On Sides Of Fuselage Was Evidently Part Of The Air Service Mechanic's School Insignia Used Before The Urn And Three Feathers On Shield Design Was Adopted After Establishment Of The School In New Location At Chanute.

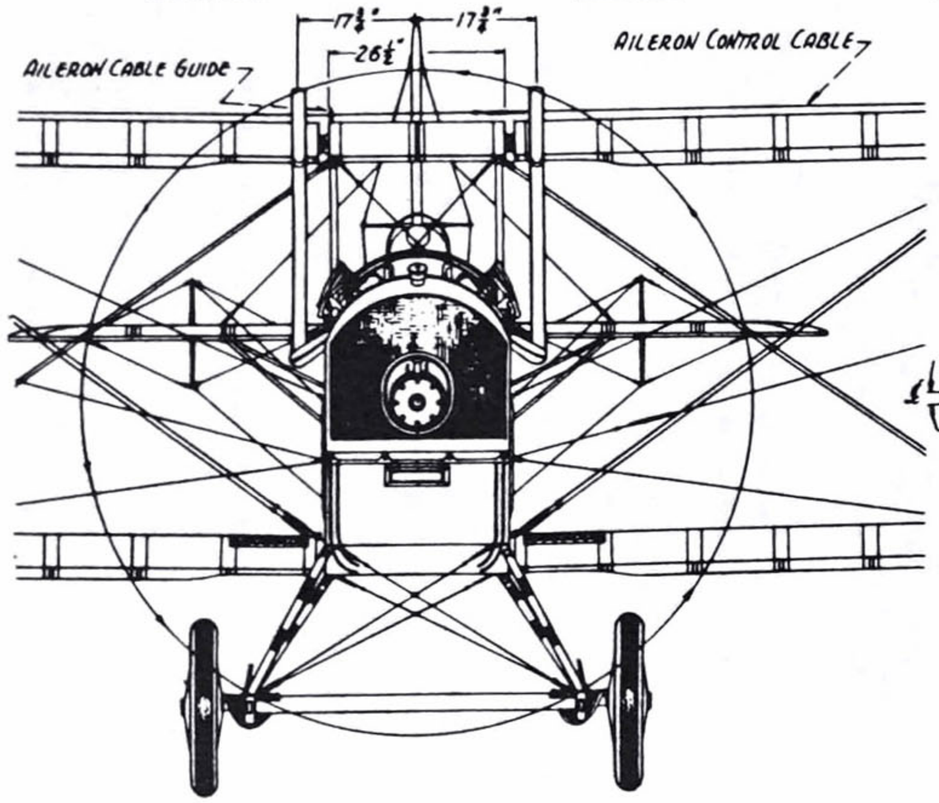

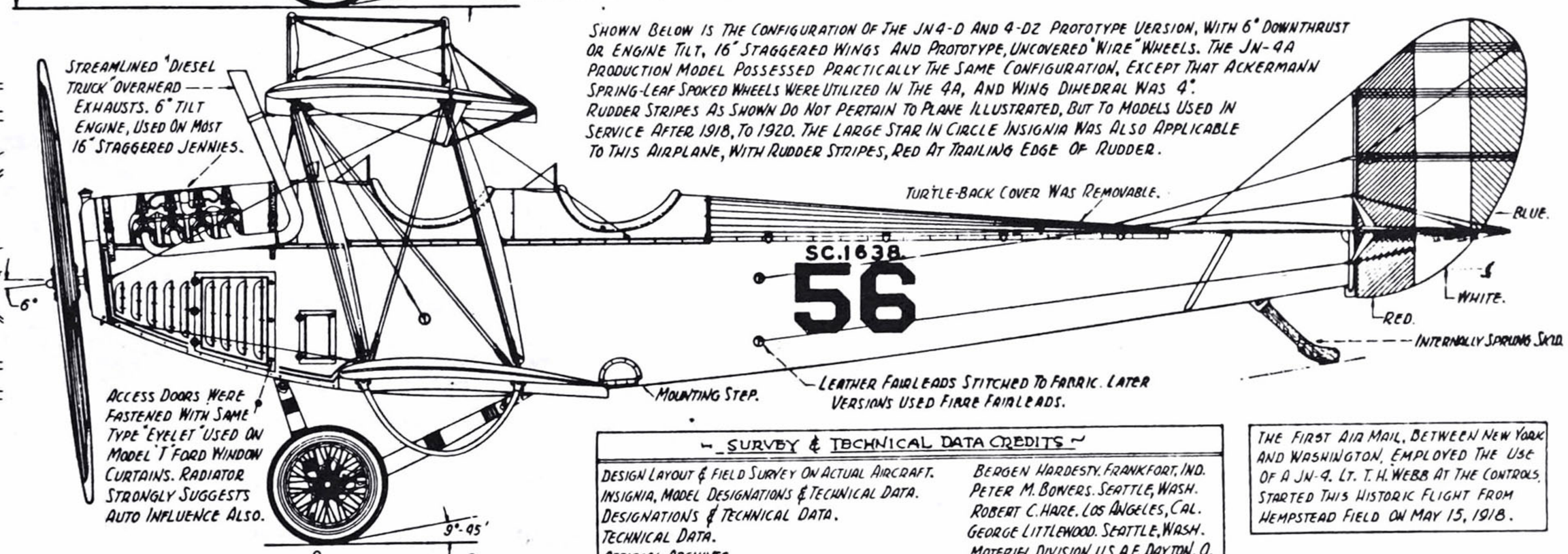

Shown Below Is The Configuration Of The JN4-D And 4-D2 Prototype Version, With 6° Downthrust Or Engine Tilt, 16" Staggered Wings And Prototype, Uncovered "Wire" Wheels. The JN-4A Production Model Possessed Practically The Same Configuration, Except That Ackermann Spring-Leaf Spoked Wheels Were Utilized In The 4A, And Wing Dihedral Was 4°. Rudder Stripes As Shown Do Not Pertain To Plane Illustrated, But To Models Used In Service After 1918, To 1920. The Large Star In Circle Insignia Was Also Applicable To This Airplane, With Rudder Stripes, Red At Trailing Edge Of Rudder.

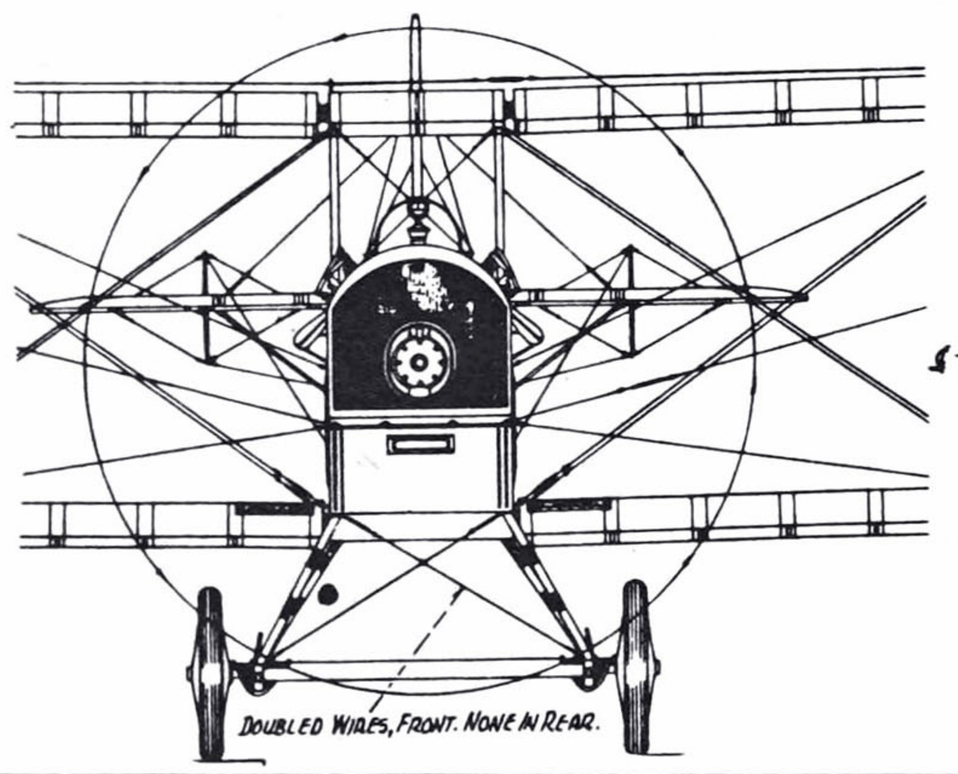

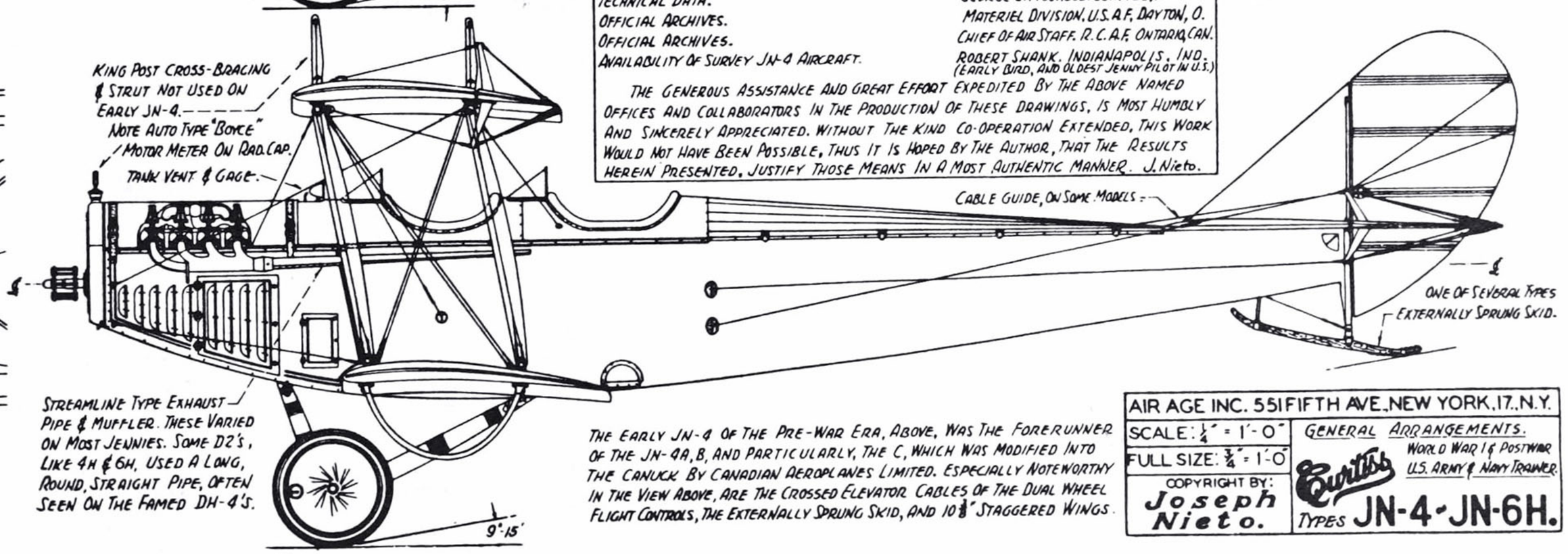

The Early JN-4 Of The Pre-War Era, Above, Was The Forerunner Of The JN-4A, B, And Particularly, The C, Which Was Modified Into The Canuck By Canadian Aeroplanes Limited. Especially Noteworthy In The View Above, Are The Crossed Elevator Cables Of The Dual Wheel Flight Controls, The Externally Sprung Skid, And 10 5/8" Staggered Wings.

Survey & Technical Data Credits

Design Layout & Field Survey On Actual Aircraft.	Bergen Hardesty. Frankfort, Ind.
Insignia, Model Designations & Technical Data.	Peter M. Bowers. Seattle, Wash.
Designations & Technical Data.	Robert C. Hare. Los Angeles, Cal.
Technical Data.	George Littlewood. Seattle, Wash.
Official Archives.	Materiel Division, U.S.A.F. Dayton, O.
Official Archives.	Chief Of Air Staff. R.C.A.F. Ontario, Can.
Availability Of Survey JN-4 Aircraft.	Robert Swank. Indianapolis, Ind. (Early Bird, And Oldest Jenny Pilot In U.S.)

The Generous Assistance And Great Effort Expedited By The Above Named Offices And Collaborators In The Production Of These Drawings, Is Most Humbly And Sincerely Appreciated. Without The Kind Co-Operation Extended, This Work Would Not Have Been Possible, Thus It Is Hoped By The Author, That The Results Herein Presented, Justify Those Means In A Most Authentic Manner. J. Nieto.

The First Air Mail, Between New York And Washington, Employed The Use Of A JN-4. Lt. T. H. Webb At The Controls, Started This Historic Flight From Hempstead Field On May 15, 1918.

AIR AGE INC. 551 FIFTH AVE., NEW YORK, 17, N.Y.

SCALE: 1/4" = 1'-0"

FULL SIZE: 3/4" = 1'-0"

COPYRIGHT BY: Joseph Nieto.

General Arrangements. World War I & Postwar U.S. Army & Navy Trainer.

Curtiss Types JN-4-JN-6H.

FROM THE AUTHOR'S POINT OF VIEW, NO OTHER AIRPLANE IN U.S. AVIATION HISTORY HAS DONE MORE TO PIONEER AVIATION IN GENERAL, THAN THE CURTISS JN-4, "FIRST LOVE" OF WORLD WAR I PILOTS, AND MANY OF THE AVIATION GREATS OF TODAY. THE FAMED JENNY, THE DEPENDABLE WORK-HORSE OF THE "GOOD OLD DAYS", HAS BEEN SEEN PLODDING ALONG AVIATION TRAILS IN MANY ODD AND VARIED GARBS, PERFORMING DUTIFULLY TO ALL THE UNLIMITED TASKS TO WHICH SHE WAS HARNESSED TO PULL, FROM HAULING WOUNDED, TO HAULING MAIL, FROM PRESENT AIR TERMINALS, FROM AN ACTUAL FRONT-LINE AIR BATTLE ON END AT BARNSTORMING AIR CIRCUSES AS LATE AS 1950! AND TRUNDLED OUT OF THE CURTISS STABLES, THERE ARE NUMEROUS OLD TIMERS WHO WILL BE GUIDED CONSIDERABLY BY THESE DRAWINGS IN RECONSTRUCTING FOR FLIGHT, SOME OF THE HULKS OF JN-4'S THAT HAVE LAIN DORMANT BUT NOT FORGOTTEN IN BARNS AND FIELDS OF YESTERYEAR. IT HAS BEEN TRULY STATED - IN PART, "THEY HAD A FIELD DAY PUTTING TOGETHER WHATEVER WINGS AND FUSELAGES THEY HAD LAYING AROUND, TIED THEM TOGETHER WITH BALEING WIRE, AND CALLED IT THE FIRST JENNY DESIGNATION THAT CAME TO MIND." BUT IT WOULD BE A JENNY, OF SORTS, YET WOULD FLY. HOW SUCCESFUL WOULD THIS PROVE IF PRACTICED ON PRESENT DAY AIRCRAFT? IMAGINE A MAN WALKING FROM THE WINGTIP OF AN F-94C "STARFIRE" TO ANOTHER, IN FLIGHT! SUCH STUNTS ON JENNIES, WERE ROUTINE STEPS ON MILESTONES OF AVIATION PERFORMED SINCE THE DAYS OF THE GATES AIR CIRCUS.

~ TABLE OF VARIATIONS. CURTISS BIPLANES TYPE JN-4 THROUGH JN-6H ~

ITEM.	JN-4. (PRE-WAR)	JN-4A. PROTOTYPE.	JN-4A. PRODUCTION	JN-4B.	JN-4C. (CANUCK.)	JN-4CAN. (CANUCK.)	JN-4D.	JN4-D2. PROTOTYPE.	JN4-D2. PRODUCTION	JN-4H.	JN-6H.
WING SPAN. UPPER.	43'-7⅞"	✓	✓	✓	✓	✓	✓	✓	✓	✓	✓
WING SPAN. LOWER.	33'-11¼"	34'-8⅛"	34'-8⅛"	33'-11¼"	34'-8⅛"	34'-8⅛"	33'-11¼"	✓	✓	✓	✓
OVERALL LENGTH.	27'-3"	27'-3"	27'-3"	27'-3"	27'-3"	27'-3"	27'-4"	27'-4"	27'-4"	27'-0½"	26'-11"
HEIGHT, O.A.	9'-10 11/32"	10'-6"	10'-6"	9'-10½"	9'-10½"	9'-10⅛"	9'-10⅛"	9'-10⅛"	9'-10⅛"	9'-10⅛"	9'-10⅛"
CHORD.	59½"	✓	✓	✓	✓	✓	✓	✓	✓	✓	✓
GAP.	61½"	✓	✓	62 1/16"	61½"	✓	60½"	61½"	✓	✓	✓
STAGGER.	10⅜"	16"	✓	12 5/16"	10⅜"	✓	16"	✓	12 5/16"	16"	✓
INCIDENCE.	2°	✓	✓	✓	✓	✓	✓	✓	✓	✓	✓
DIHEDRAL.	1°	4°	✓	1°	✓	✓	✓	✓	✓	✓	✓
TYPE ENGINE.	CURTISS OX-5 90 H.P.	✓	✓	OX-2 90.	OXX-3 90.	OX-5 - 90.	✓	✓	✓	WISP SUIZA 150 H.P.	✓
ANGLE OF THRUST.	0°	6° DOWN-THRUST.	✓	0°	✓	✓	6° DOWN.	✓	0°	✓	✓
ENGINE EXHAUSTS.	SHORT COLL-ECTOR TYPE.	SH. COLL. & 2 HEAD STRS.	SHORT COLLECTOR	✓	✓	SAME, ALSO SHORT PIPES.	SHORT, STR. COLLECTOR.	SAME, ALSO FLUSH STACKS.	SAME AS CANUCK	LONG "AUTO" STR. PIPES	SAME, ALSO SHORT PIPES
FLIGHT CONTROLS.	DEP. WHEEL & EL. CABLES.	✓	✓	✓	MODIFIED TO STICK CONTR.	✓	STICKS	REVISED TO ¶ STICKS.	✓	✓	✓
STABILIZER SETTING.	0°	✓	✓	✓	✓	✓	NONE.	✓	✓	✓	SINGLE VERT. STRUT
AILERON INTERCONN'S	NONE.	SINGLE STRUT.	STEEL CABLE.	NONE.	VERTICAL & DIAG. STRUTS	R.A.F. 6 EXPERIM'L.	EIFFEL 36	✓	✓	✓	✓
AIR FOIL.	EIFFEL 36	✓	✓	✓	✓	✓	CURVED UPL CUT-OUTS.	✓	✓	✓	✓
WING C/C OUTLINE.	NO CUT OUT. STR. ACROSS	✓	SQUARE CUT-OUT.	SAME AS JN-4.	✓	✓	POINTED	✓	✓	✓	✓
WING TIP OUTLINE. TOP	"POINTED" REAR	POINTED	✓	POINTED	POINTED	✓	ROUNDED	✓	✓	✓	✓
TIP OUTLINE LOWER.	ROUNDED REAR.	POINTED	✓	ROUNDED	ROUNDED	✓	SAME AS JN-4A.	✓	✓	✓	✓
STABILIZER OUTLINE.	ROUNDED LEAD. EDGE	PARALLELLE WITH TR EDG	✓	✓	SAME AS EARLY JN-4	✓	SAME AS JN-4A.	✓	✓	✓	✓
ELEVATOR OUTLINE.	TR EDGES SWEPT BACK.	PARALLEL. NO SWEEP.	✓	✓	SAME AS EARLY JN-4.	✓	SAME AS JN-4A.	✓	✓	✓	✓
RUDDER OUTLINE.	GAMMA, EXT. BELOW BODY.	*CONVENTION, SEE DWGS.)	✓	✓	✓	✓	SAME AS JN-4A, B, C, D-2	✓	✓	✓	✓
TYPE TAIL SKID.	EXTERNAL SPRUNG.	INTERNAL SPRUNG.	✓	✓	✓	✓	✓	✓	✓	✓	✓
WING TIP SKIDS.	"U" SHAPE WOOD.	✓	✓	✓	✓	✓	✓	✓	✓	✓	✓
TYPE L.G. WHEELS	40 SPOKE STANDARD.	✓	ACKERMANN SPRING STRUT	40 SPOKE STANDARD	✓	✓	✓	✓	✓	✓	UPPERS & LOWERS
NO. OF AILERONS.	UPPERS ONLY (2)	UPPERS & LOWER (4)	✓	✓	UPPERS ONLY (2)	UPPERS & LOWERS (4)	✓	✓	✓	✓	✓

REMARKS: ✱1. O.A. LENGTH: INASMUCH AS THE FUSELAGES OF ALL JN MODELS APPEAR TO HAVE BEEN BASICALLY THE SAME, AND THE REPORTED LENGTH VARIED SO LITTLE, DIFFERENCES IN AIRPLANE O.A.L. IS BELIEVED DUE TO RUDDER SWING & TILT OR NO-TILT OF ENGINE.
2. HEIGHT: MEASURED FROM TOPMOST WING KING POST TO GR. LEVEL. DIFFERENCES DUE TO INCREASED DIHEDRAL & ESTERNAL SKID IF MEASURED AT REST.
3. ENGINE EXHAUSTS: THESE ALSO VARIED CONSIDERABLY. L&R SIDES DIFFERED ALSO. SOME UTILIZED HEAT FOR CARBURETOR AIR HEATING. THE JN4-D2 PROD. ARMY MODEL USED SHORT STRAIGHT STACKS LIKE MOST CANUCK'S & JN-6H. 4. FLIGHT CONTROLS OF JN4-D2 STRENGTHENED OVER 4D DESIGN. 5. AILERON INTERCONNECTIONS: ON MODELS A, C, H & ON VARIED. A & H, VARIOUSLY WIRE & STRUT. 6H, STRUT ONLY.

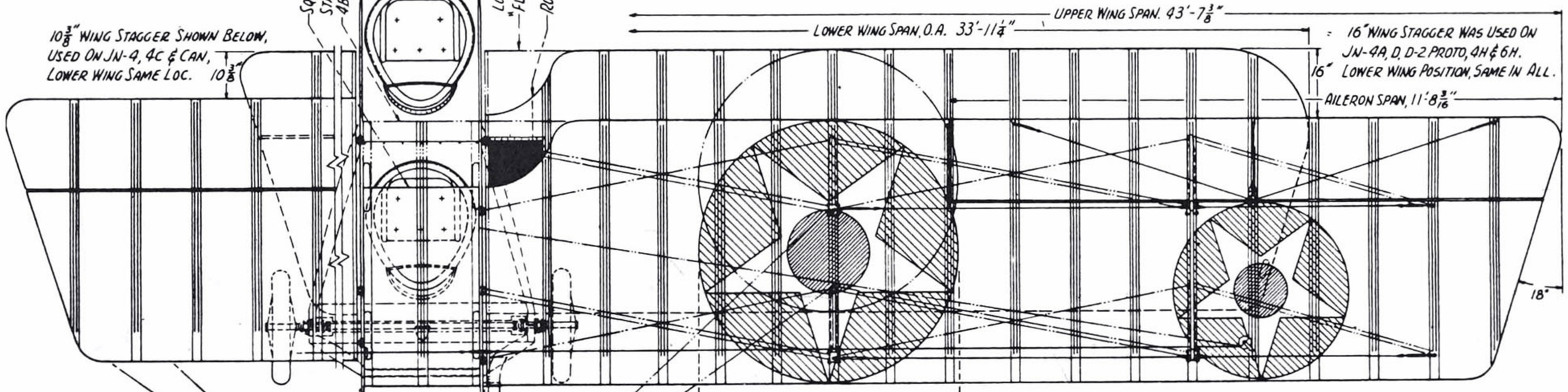

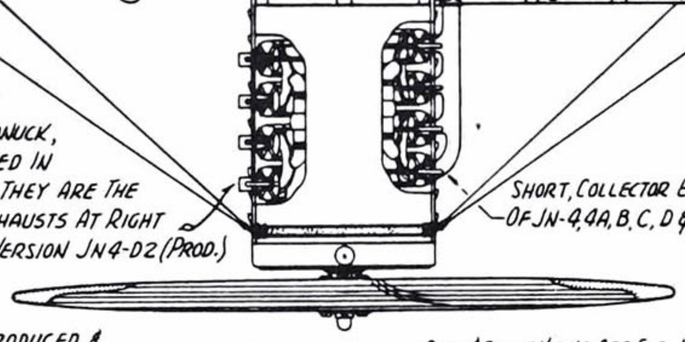

SHOWN ABOVE ARE THE "POINTED" WING TRAILING TIPS USED IN THE JN-4A, 4C & CANUCK, AND JN-6H. STAGGER VARIED IN ALL ABOVE TYPES. ACTUALLY, THEY ARE THE JN-4C & CANUCK WINGS. EXHAUSTS AT RIGHT ARE ALSO CANUCK & ARMY VERSION JN4-D2 (PROD.)

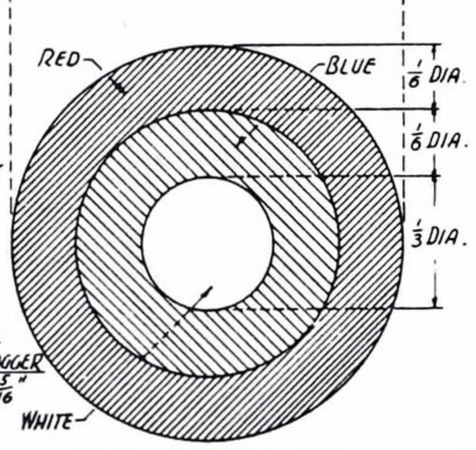

~ U.S. COCKADE. 1918 TO 1920 ~

INSIGNIA. THE LARGE STAR IN CIRCLE, ON WINGS ONLY, WAS USED ON U.S. "JENNIES" FROM MAY 1917 TO JAN. 1918. & PLACED IN FULL CHORD AT TANGENTS SHOWN ABOVE. ON JN'S WITH NO LOWER AILERONS, INSIGNIA WAS PAINTED UNDER LOWER WINGS DIRECTLY BELOW UPPER STAR. THE SAME APPLIED TO COCKADE, (U.S. & CANUCK) SHOWN AT LEFT. RUDDER STRIPES WERE RED (AT TRAILING EDGE) WHITE & BLUE. IN JAN. 1918, THE U.S. CHANGED TO COCKADES, & REVERSED RUDDER STRIPES. SHIPS BUILT SINCE 1918 TO END OF WAR, USED COCKADES WITH RUDDER STRIPES BLUE AT TRAILING EDGE. IN 1920, THE U.S. WAS BACK TO USING STARS & AGAIN TURNED AROUND RUDDER STRIPES TO ORIGINAL RED AT TRAILING EDGE. THE SIZE & LOCATION OF U.S. POSTWAR STAR INSIGNIA IS ALSO SHOWN ABOVE, APPR. ONE DIAMETER INBOARD FROM TIP.
CONT. BELOW.

THE JN-4D WAS THE MOST PRODUCED & USED JENNY. THE CANADIAN JENNY, CALLED THE "CANUCK", & JN-4C, WAS BUILT IN CANADA (SEE PART 2) JN-4, 4A & B, BUILT IN QUANTITY - FOR THE R.F.C., SEVERAL HUNDRED WERE SHIPPED OVER TO BLIGHTY.

PLAN & FRONT VIEWS ARE FOR JN4-D2 PRODUCTION JOB, EXCEPT FOR 16" STAGGER SHOWN, WHICH WAS 12 5/16" ON 4D2 PROD.

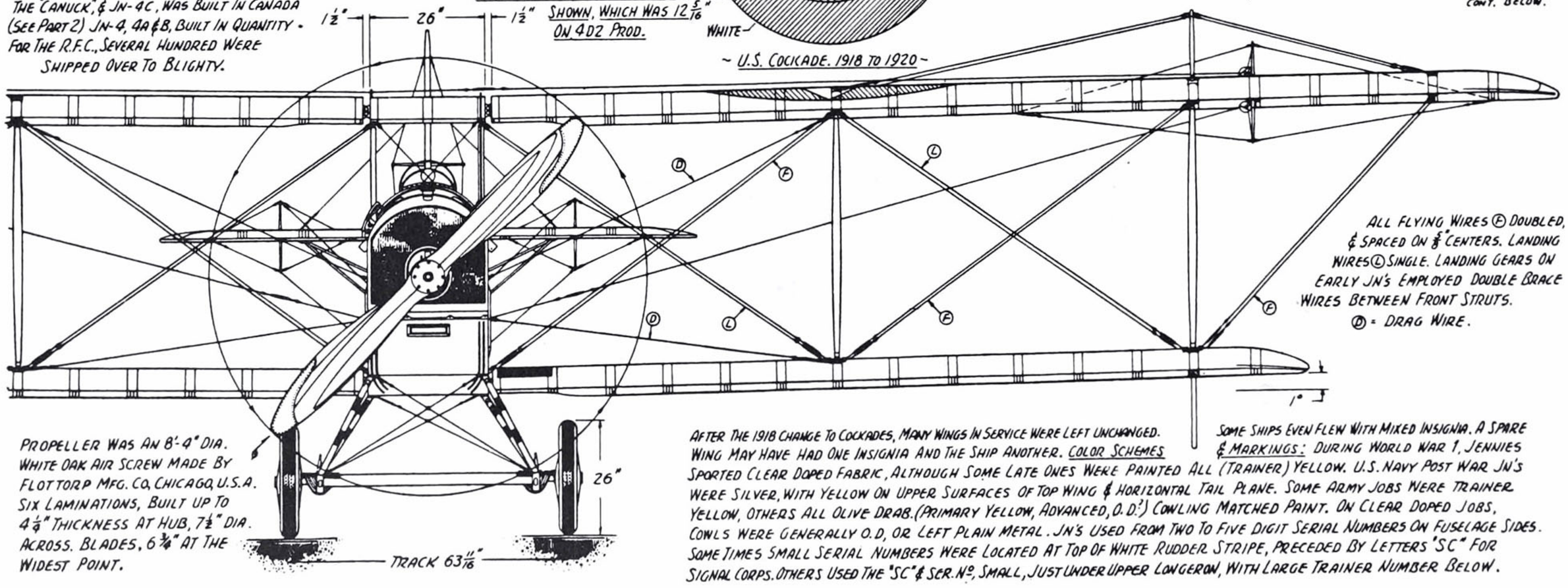

ALL FLYING WIRES (F) DOUBLED, & SPACED ON 8" CENTERS. LANDING WIRES (L) SINGLE. LANDING GEARS ON EARLY JN'S EMPLOYED DOUBLE BRACE WIRES BETWEEN FRONT STRUTS.
(D) = DRAG WIRE.

PROPELLER WAS AN 8'-4" DIA. WHITE OAK AIR SCREW MADE BY FLOTTORP MFG. CO, CHICAGO, U.S.A. SIX LAMINATIONS, BUILT UP TO 4¼" THICKNESS AT HUB, 7½" DIA. ACROSS BLADES, 6¾" AT THE WIDEST POINT.

AFTER THE 1918 CHANGE TO COCKADES, MANY WINGS IN SERVICE WERE LEFT UNCHANGED. WING MAY HAVE HAD ONE INSIGNIA AND THE SHIP ANOTHER. COLOR SCHEMES & MARKINGS: DURING WORLD WAR 1, JENNIES SPORTED CLEAR DOPED FABRIC, ALTHOUGH SOME LATE ONES WERE PAINTED ALL (TRAINER) YELLOW. U.S. NAVY POST WAR JN'S WERE SILVER, WITH YELLOW ON UPPER SURFACES OF TOP WING & HORIZONTAL TAIL PLANE. SOME ARMY JOBS WERE TRAINER YELLOW, OTHERS ALL OLIVE DRAB. (PRIMARY YELLOW, ADVANCED, O.D.!) COWLING MATCHED PAINT. ON CLEAR DOPED JOBS, COWLS WERE GENERALLY O.D, OR LEFT PLAIN METAL. JN'S USED FROM TWO TO FIVE DIGIT SERIAL NUMBERS ON FUSELAGE SIDES. SOME TIMES SMALL SERIAL NUMBERS WERE LOCATED AT TOP OF WHITE RUDDER STRIPE, PRECEDED BY LETTERS "SC" FOR SIGNAL CORPS. OTHERS USED THE "SC" & SER. NO., SMALL, JUST UNDER UPPER LONGERON, WITH LARGE TRAINER NUMBER BELOW. SOME SHIPS EVEN FLEW WITH MIXED INSIGNIA. A SPARE

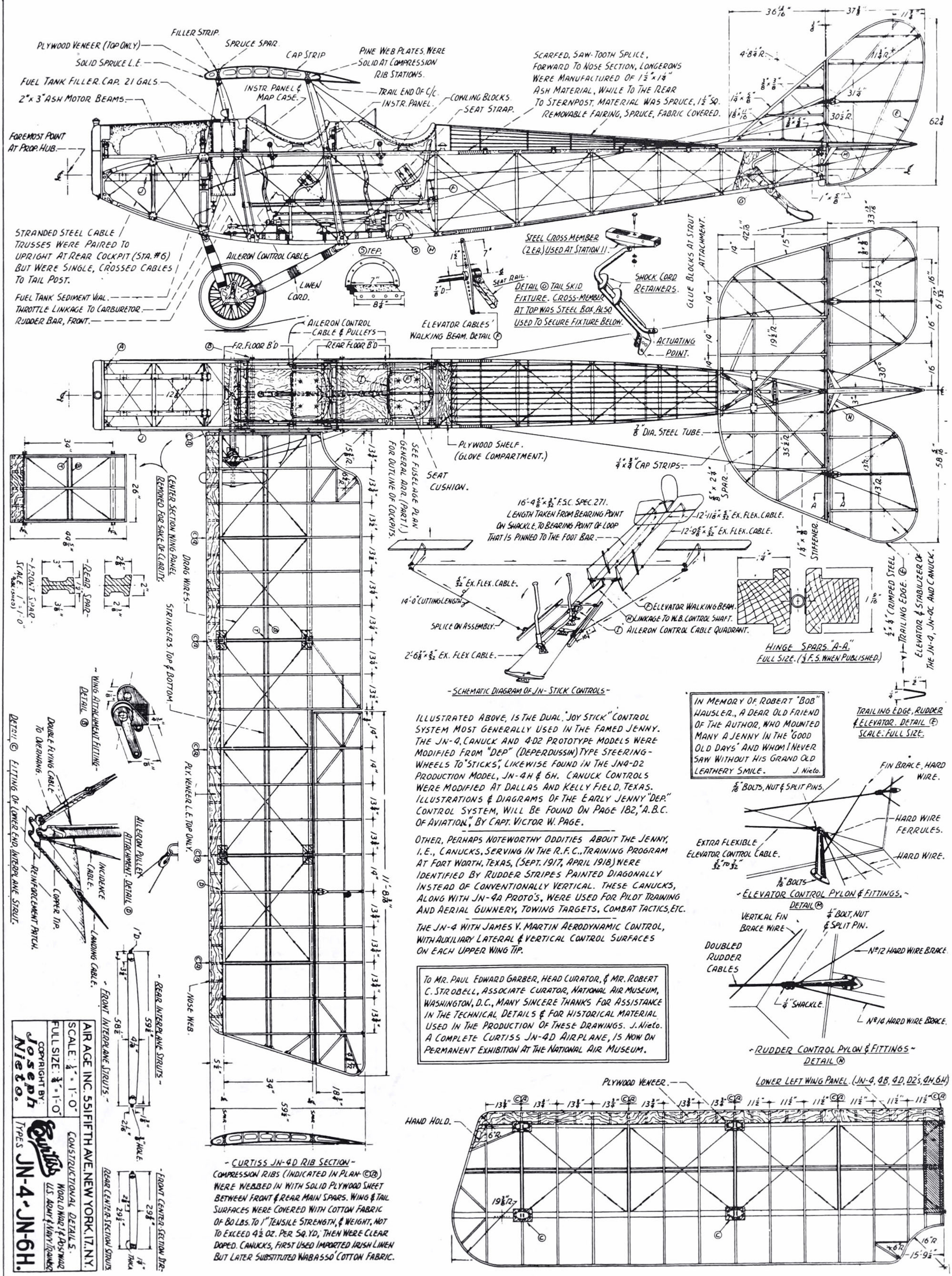
PLYWOOD VENEER (TOP ONLY)
FILLER STRIP.
SPRUCE SPAR.
SOLID SPRUCE L.E.
CAP STRIP
PINE WEB PLATES. WERE SOLID AT COMPRESSION RIB STATIONS.
FUEL TANK FILLER. CAP. 21 GALS.
INSTR. PANEL & MAP CASE.
TRAIL END OF C/C.
INSTR. PANEL.
COWLING BLOCKS.
SEAT STRAP.
2"x 3" ASH MOTOR BEAMS.
SCARFED, SAW-TOOTH SPLICE, FORWARD TO NOSE SECTION, LONGERONS WERE MANUFACTURED OF 1½"x1⅞" ASH MATERIAL, WHILE TO THE REAR TO STERNPOST, MATERIAL WAS SPRUCE, 1½" SQ. REMOVABLE FAIRING, SPRUCE, FABRIC COVERED.
FOREMOST POINT AT PROP. HUB.
STRANDED STEEL CABLE TRUSSES WERE PAIRED TO UPRIGHT AT REAR COCKPIT (STA. #6) BUT WERE SINGLE, CROSSED CABLES TO TAIL POST.
FUEL TANK SEDIMENT VIAL.
THROTTLE LINKAGE TO CARBURETOR.
RUDDER BAR, FRONT.
AILERON CONTROL CABLE.
LINEN CORD.
STEP.
7"
8¼"
1½"
7"
⅞"D.
SEAT RAIL.
ELEVATOR CABLES' WALKING BEAM. DETAIL (F)
STEEL CROSS MEMBER (2 EA.) USED AT STATION 11.
SHOCK CORD RETAINERS.
DETAIL (G) TAIL SKID FIXTURE. CROSS-MEMBER AT TOP WAS STEEL BOX, ALSO USED TO SECURE FIXTURE BELOW.
ACTUATING POINT.
GLUE BLOCKS AT STRUT ATTACHMENT.
AILERON CONTROL CABLE & PULLEYS
F.R. FLOOR B'D
REAR FLOOR B'D
12"
PLYWOOD SHELF. (GLOVE COMPARTMENT.)
SEAT CUSHION.
SEE FUSELAGE PLAN GENERAL ARR. (PART I.) FOR OUTLINE OF COCKPITS.
7/8" DIA. STEEL TUBE.
¼"x ¾" CAP STRIPS.
⅝"x 2½" SPAR.
1¼"x ⅜" STIFFENER.
¼"x ¾" (CRIMPED STEEL) TRAILING EDGE. (E)
ELEVATOR & STABILIZER OF THE JN-4, JN-4C AND CANUCK.
16'-4⅝"x 3/32" F.S.C. SPEC. 271. LENGTH TAKEN FROM BEARING POINT ON SHACKLE TO BEARING POINT OF LOOP THAT IS PINNED TO THE FOOT BAR.
12'-11⅛"x 5/32" EX. FLEX. CABLE.
12'-9⅝"x 5/32" EX. FLEX. CABLE.
5/32" EX. FLEX. CABLE.
14'-0" CUTTING LENGTH
SPLICE ON ASSEMBLY.
2'-6⅞"x 5/32" EX. FLEX CABLE.
(F) ELEVATOR WALKING BEAM.
(H) LINKAGE TO W.B. CONTROL SHAFT.
(I) AILERON CONTROL CABLE QUADRANT.
HINGE SPARS. "A-A." FULL SIZE. (⅓ F.S. WHEN PUBLISHED.)
TRAILING EDGE, RUDDER & ELEVATOR. DETAIL (E) SCALE: FULL SIZE.
- SCHEMATIC DIAGRAM OF JN-STICK CONTROLS -
ILLUSTRATED ABOVE, IS THE DUAL "JOY STICK" CONTROL SYSTEM MOST GENERALLY USED IN THE FAMED JENNY. THE JN-4, CANUCK AND 4-D2 PROTOTYPE MODELS WERE MODIFIED FROM "DEP" (DEPERDUSSIN) TYPE STEERING-WHEELS TO "STICKS", LIKEWISE FOUND IN THE JN4-D2 PRODUCTION MODEL, JN-4H & 6H. CANUCK CONTROLS WERE MODIFIED AT DALLAS AND KELLY FIELD, TEXAS. ILLUSTRATIONS & DIAGRAMS OF THE EARLY JENNY "DEP." CONTROL SYSTEM, WILL BE FOUND ON PAGE 182, "A.B.C. OF AVIATION," BY CAPT. VICTOR W. PAGE.
OTHER, PERHAPS NOTEWORTHY ODDITIES ABOUT THE JENNY, I.E., CANUCKS, SERVING IN THE R.F.C., TRAINING PROGRAM AT FORT WORTH, TEXAS, (SEPT. 1917, APRIL 1918) WERE IDENTIFIED BY RUDDER STRIPES PAINTED DIAGONALLY INSTEAD OF CONVENTIONALLY VERTICAL. THESE CANUCKS, ALONG WITH JN-4A PROTO'S, WERE USED FOR PILOT TRAINING AND AERIAL GUNNERY, TOWING TARGETS, COMBAT TACTICS, ETC.
THE JN-4 WITH JAMES V. MARTIN AERODYNAMIC CONTROL, WITH AUXILIARY LATERAL & VERTICAL CONTROL SURFACES ON EACH UPPER WING TIP.
IN MEMORY OF ROBERT "BOB" HAUSLER., A DEAR OLD FRIEND OF THE AUTHOR, WHO MOUNTED MANY A JENNY IN THE "GOOD OLD DAYS" AND WHOM I NEVER SAW WITHOUT HIS GRAND OLD LEATHERY SMILE. J. Nieto.
TO MR. PAUL EDWARD GARBER, HEAD CURATOR, & MR. ROBERT C. STROBELL, ASSOCIATE CURATOR, NATIONAL AIR MUSEUM, WASHINGTON, D.C., MANY SINCERE THANKS FOR ASSISTANCE IN THE TECHNICAL DETAILS & FOR HISTORICAL MATERIAL USED IN THE PRODUCTION OF THESE DRAWINGS. J. Nieto. A COMPLETE CURTISS JN-4D AIRPLANE, IS NOW ON PERMANENT EXHIBITION AT THE NATIONAL AIR MUSEUM.
FIN BRACE, HARD WIRE.
⅛" BOLTS, NUT & SPLIT PINS.
HARD WIRE FERRULES.
EXTRA FLEXIBLE ELEVATOR CONTROL CABLE. 5/32" TO 7/32"
HARD WIRE.
⅜" BOLTS
- ELEVATOR CONTROL PYLON & FITTINGS. - DETAIL (M)
VERTICAL FIN BRACE WIRE
¼" BOLT, NUT & SPLIT PIN.
DOUBLED RUDDER CABLES
No 12 HARD WIRE BRACE
¼" SHACKLE.
No 14 HARD WIRE BRACE.
- RUDDER CONTROL PYLON & FITTINGS - DETAIL (N)
LOWER LEFT WING PANEL. (JN-4, 4B, 4D, D2's, 4H, 6H)
PLYWOOD VENEER.
HAND HOLD.
6"R.
16"R
15'-9½"
CENTER SECTION WING PANEL REMOVED FOR SAKE OF CLARITY.
STRINGERS TOP & BOTTOM
DRAG WIRES.
PLY. VENEER L.E. TOP ONLY.
NOSE RIB.
SEE FUSELAGE PLAN GENERAL ARR. (PART I.) FOR OUTLINE OF COCKPITS.
SEAT CUSHION.
PLYWOOD SHELF. (GLOVE COMPARTMENT.)
- REAR SPAR -
- FRONT SPAR. SCALE: 1"=1'-0" (ENLARGED)
- WING ATTACHMENT FITTING - DETAIL (B)
DOUBLE FLYING CABLE TO OVERHANG.
AILERON PULLEY ATTACHMENT. DETAIL (D)
INCIDENCE CABLE.
LANDING CABLE.
COPPER TIP.
REINFORCEMENT PATCH.
DETAIL (C) FITTING OF LOWER END, INTERPLANE STRUT.
- REAR INTERPLANE STRUTS -
- FRONT INTERPLANE STRUTS -
- REAR CENTER-SECTION STRUTS -
- FRONT CENTER-SECTION STR-
- CURTISS JN-4D RIB SECTION -
COMPRESSION RIBS (INDICATED IN PLAN - (CR)) WERE WEBBED IN WITH SOLID PLYWOOD SHEET BETWEEN FRONT & REAR MAIN SPARS. WING & TAIL SURFACES WERE COVERED WITH COTTON FABRIC OF 80 LBS. TO 1" TENSILE STRENGTH, & WEIGHT, NOT TO EXCEED 4½ OZ. PER SQ. YD. THEN WERE CLEAR DOPED. CANUCKS, FIRST USED IMPORTED IRISH LINEN BUT LATER SUBSTITUTED WABASSO COTTON FABRIC.
AIR AGE INC. 551 FIFTH AVE. NEW YORK, 17, N.Y.
SCALE: ¼" = 1'-0"
FULL SIZE: ⅜" = 1'-0"
CONSTRUCTIONAL DETAILS. WORLD WAR 1 & POST WAR U.S. ARMY & NAVY TRAINERS
COPYRIGHT BY: Joseph Nieto.
Curtiss TYPES JN-4, JN-6H.

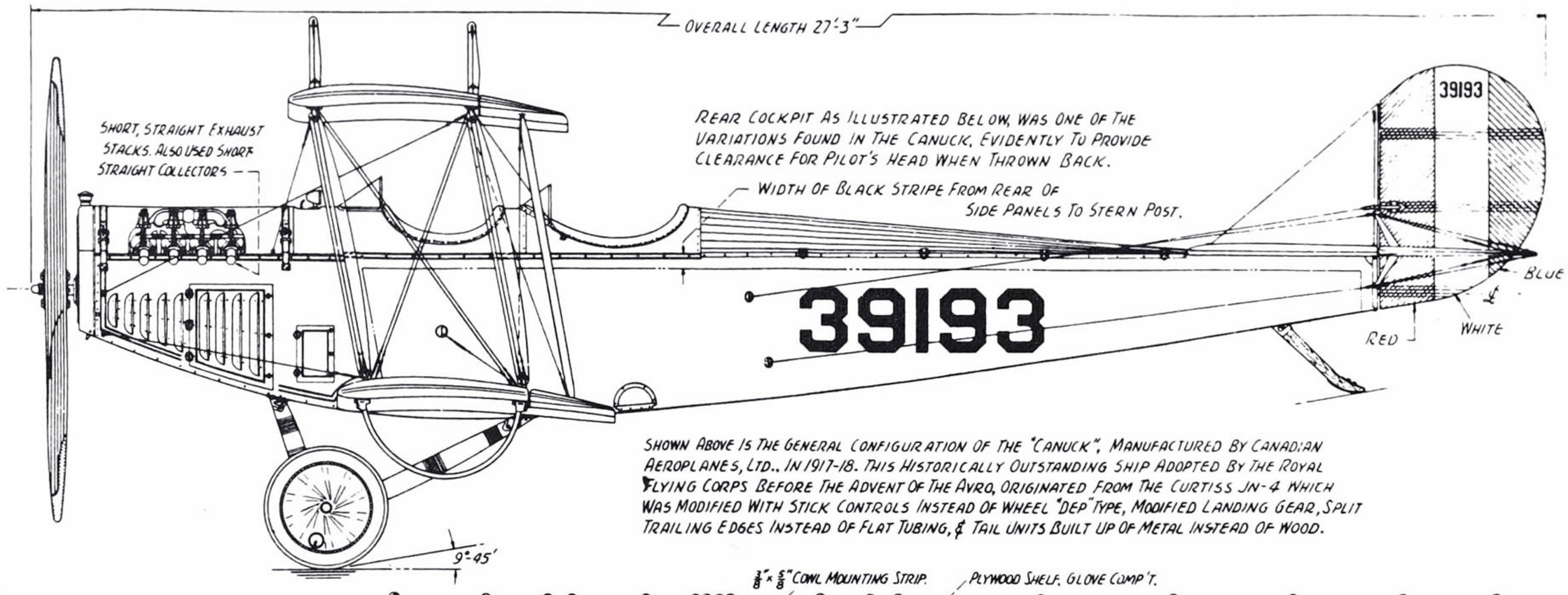

SHOWN ABOVE IS THE GENERAL CONFIGURATION OF THE "CANUCK", MANUFACTURED BY CANADIAN AEROPLANES, LTD., IN 1917-18. THIS HISTORICALLY OUTSTANDING SHIP ADOPTED BY THE ROYAL FLYING CORPS BEFORE THE ADVENT OF THE AVRO, ORIGINATED FROM THE CURTISS JN-4 WHICH WAS MODIFIED WITH STICK CONTROLS INSTEAD OF WHEEL "DEP" TYPE, MODIFIED LANDING GEAR, SPLIT TRAILING EDGES INSTEAD OF FLAT TUBING, & TAIL UNITS BUILT UP OF METAL INSTEAD OF WOOD.

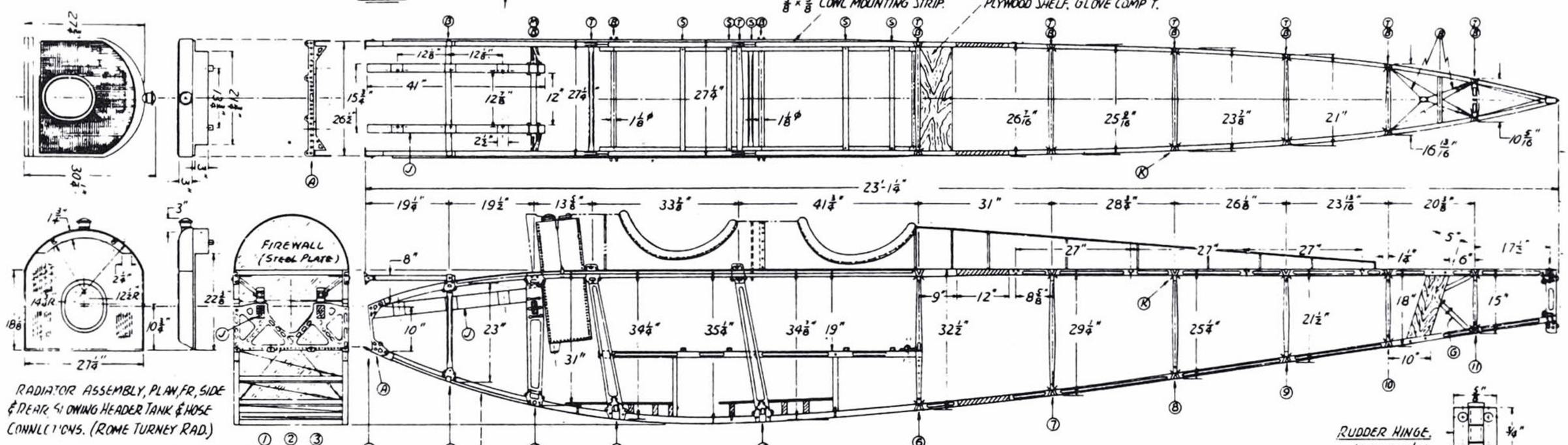

SHOWN ABOVE, IS THE USUAL & APPROXIMATE ARRANGEMENT OF THE ENGINE AND NAVIGATION INSTRUMENTS IN THE JN-4D2 FRONT & REAR COCKPITS: THESE VARIED HOWEVER, SOME JN'S HAVING NAVIGATIONAL INSTRUMENTS MOUNTED ON HORIZONTAL AUXILIARY BOARDS, LOW IN FRONT & ON EITHER SIDE OF THE PILOT. STANDARD EQUIPMENT CALLED FOR; AN AIRSPEED, BALL LEVEL IND., ALTIMETER, TACHOMETER, CLOCK, OIL PRESSURE GAUGE, FUEL PRESS. (IN STARTING SYSTEM) FUEL AIR PRESSURE IN FEED SYSTEM, MAGNETIC COMPASS, THROTTLE & IGNITION CONTROL LEVERS AND SWITCHES & FUEL CUT OFF VALVE IN REAR OR INSTRUCTOR'S COCKPIT. STUDENT'S (FRONT) COCKPIT WAS EQUIPPED WITH ONLY THE MOST PERTINENT INSTRUMENTS WITH REGARD TO AIRCRAFT ALTITUDE, SPEED & POSITION. SPARK & THROTTLE CONTROLS ON THE JN-4D2 WERE CHANGED TO LEFT SIDE OF COCKPITS AS SHOWN ON OPPOSITE PAGE.

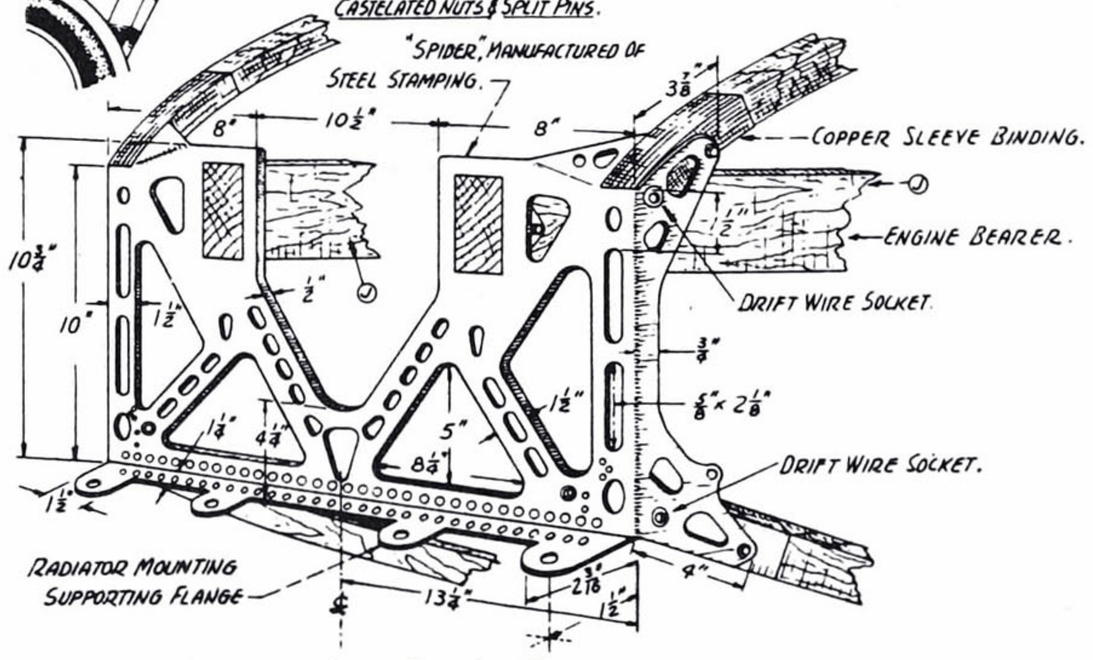

~ SPECIFICATIONS. ADDITIONAL TO PART 1. ~

AREAS:	
UPPER PLANES.	167.92 □ft
LOWER PLANES.	149.42 "
AILERONS. (EACH 17.6 □ft)	35.20 "
HORIZONTAL STABILIZER.	28.70 "
VERTICAL STABILIZER.	3.80 "
ELEVATORS (EACH 11.00 □ft)	22.00 "
RUDDER.	12.00 "
TOTAL SUPPORTING SURFACE.	352.56 "
WEIGHTS:	
NET WEIGHT, EMPTY.	1430 LBS.
GROSS WEIGHT, LOADED.	1920 "
USEFUL LOAD.	490 "
WEIGHT OF FUEL (21 U.S. GALS.)	130 "
" " OIL (4 " ") IN CRANKCASE.	30 "
" " PILOT & PASSENGER (165 LBS. EA.)	330 "
PERFORMANCE:	
MAXIMUM, HORIZONTAL SPEED.	75 M.P.H.
MINIMUM " "	45 "
CLIMB IN 10 MINUTES.	2000 FEET.
ENGINE: CURTISS OX-5, 90 HP, V-8 (STAGGERED CYL'S) WATER COOL'D	

RATED AT 1400 R.P.M. WEIGHT PER R.H.P. - 4.33 LBS. BORE & STROKE - 4" × 5" FUEL CONSUMPTION - 9 GALS. PER HR. FOREGOING DATA, FROM THE CURTISS STANDARD JN-4D MILITARY TRACTOR HAND BOOK, 1918. (NOTE: DETAILED SCALE DRAWINGS OF THE CURTISS OX-5 90 H.P. ENGINE ARE IN COURSE OF PREPARATION AT THIS WRITING, IN ¾" TO 1'-0" SCALE, BUT WERE NOT AVAILABLE IN TIME FOR THIS ISSUE. J. Nieto.)

~ CURTISS JN-4 FRONT SPIDER ~
(DETAIL Ⓐ)

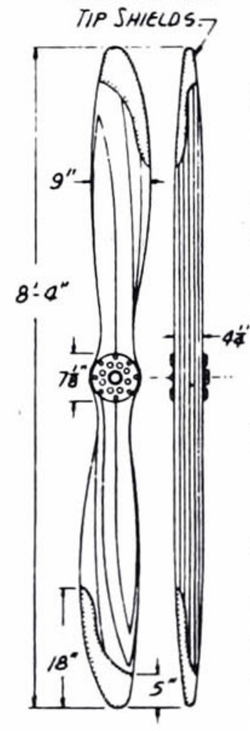

SHOWN ABOVE, IS ONE TYPE (FLOTTORP) PROPELLER USED ON JENNIES, WHEREIN VARIOUS DESIGNS AND SIZES WERE USED. ABOVE, IS THE 8'-4", 6 LAMINATIONS WHITE OAK JOB. CANADIAN AEROPLANES LTD., MANUFACTURED A 9FT, FIVE PLY, WHITE OAK PROPELLER ON MACHINES THAT WERE ALMOST HUMAN, ORIGINATING FROM A LATHE DESIGNED BY PETER THE GREAT FOR MAKING GUN-STOCKS. C.A.L.'S MACHINE TURNED OUT PROPS, FOUR AT A TIME, TO ½" OF FINISHED FORM. FINAL TOUCHES AND BALANCING, COMPLETED BY HAND.

Curtiss Model D

drawing by WILLIAM WYLAM

THIS AIRCRAFT was the result of U.S. Signal Corps authorization by Congress to appropriate aircraft for the Army. After a 5-year struggle to prove the practicality of the airplane, the Wright Brothers' flight demonstration had opened the eyes of Army brass to a new spectrum of weaponry. In 1911 Congress approved the first allotment specifically for aeronautics, and the Wright Brothers and Glenn Curtiss received the first two such contracts.

Designated "Signal Corps" sequence numbers, S.C. 1, the first military aircraft of the Wright Brothers was retired to the Air Force Museum that year, and Curtiss' S.C. 2 was the second aircraft to enter testing at Fort Sam Houston in April 1911. G.E.M. Kelly flew the trials on the morning of April 10. He took it up and shortly came in for a landing, hit the ground hard, and bounced back in the air. Climbing slowly, Kelly banked the airplane away from the tent area, suddenly lost control, and plummeted to his death. The S.C. 2 was repaired, however, and was used as a trainer. It was removed from service on February 24, 1914.

Seven Pushers survive, and many reproductions. □

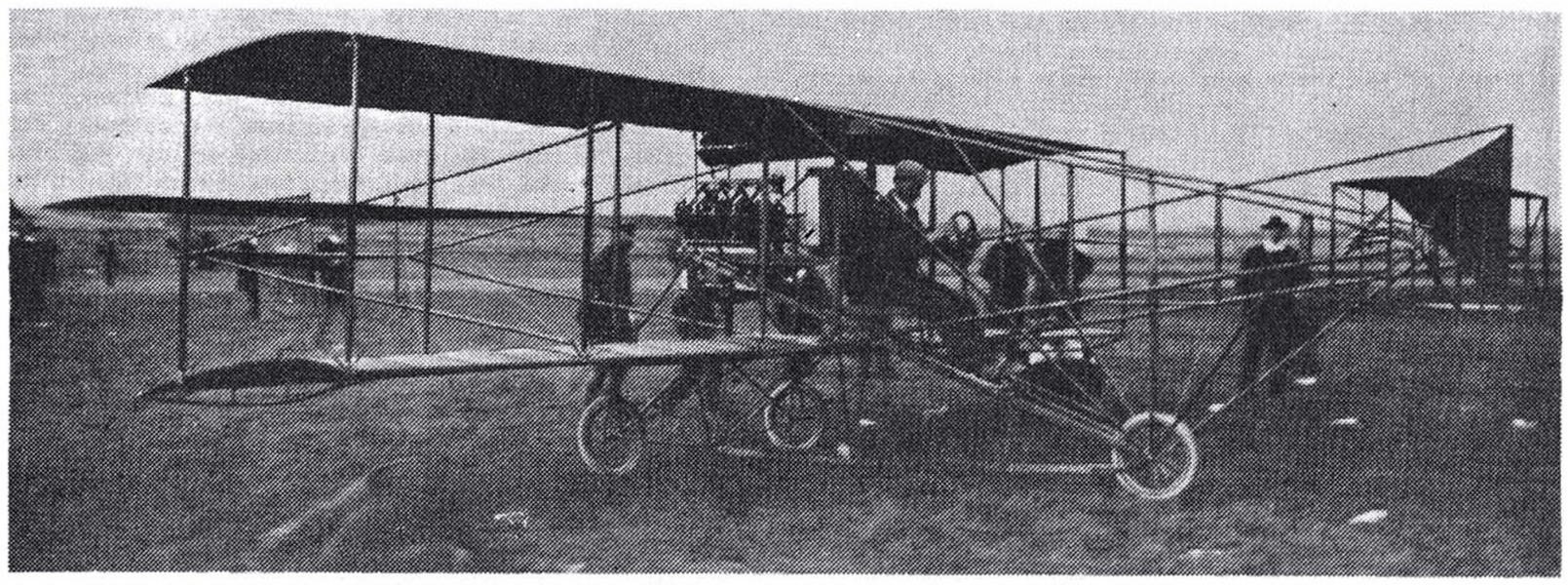

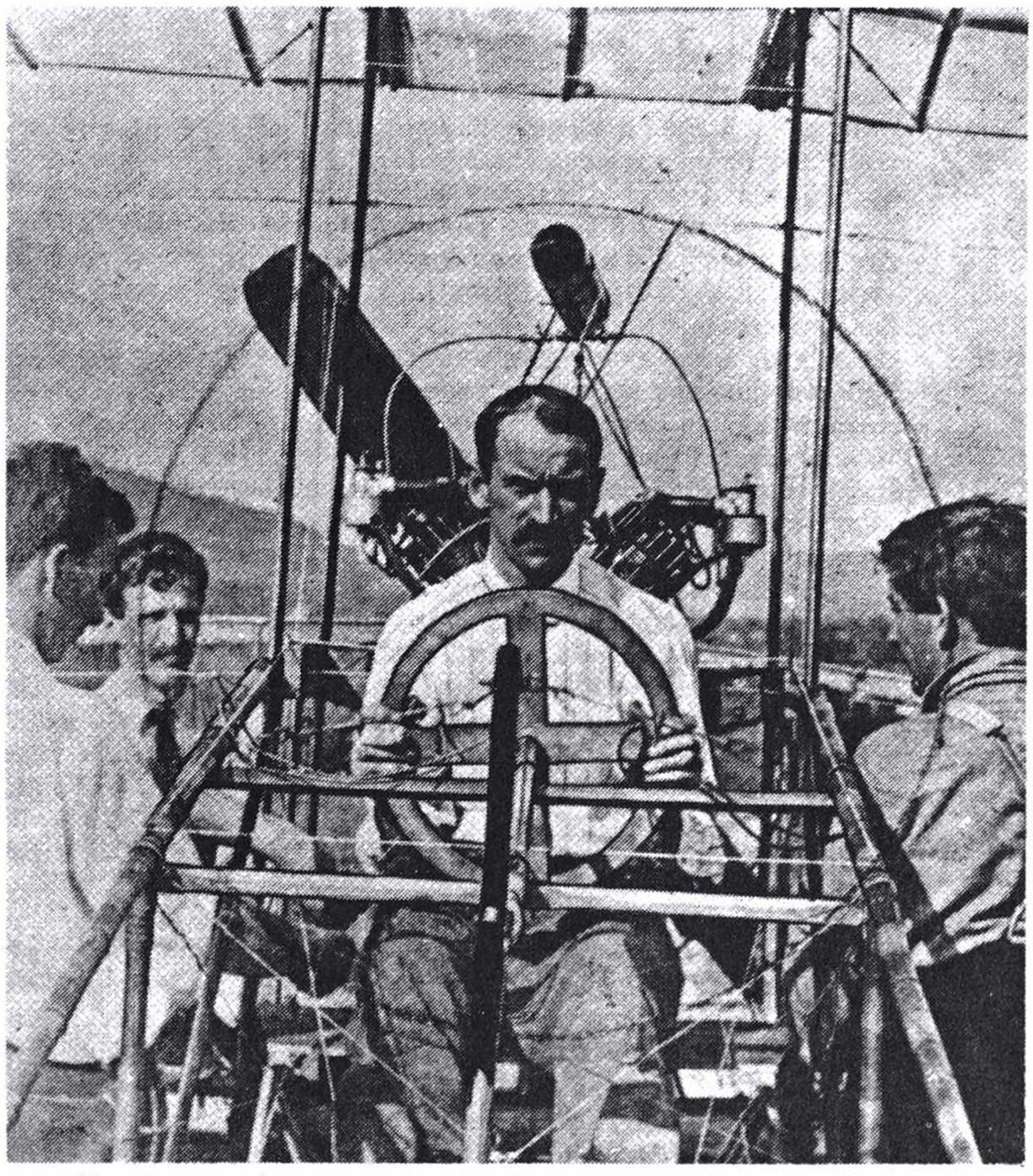

The Curtiss S.C. 2 was the second aircraft to enter the military inventory. "A.A.H.S." Journal photo.

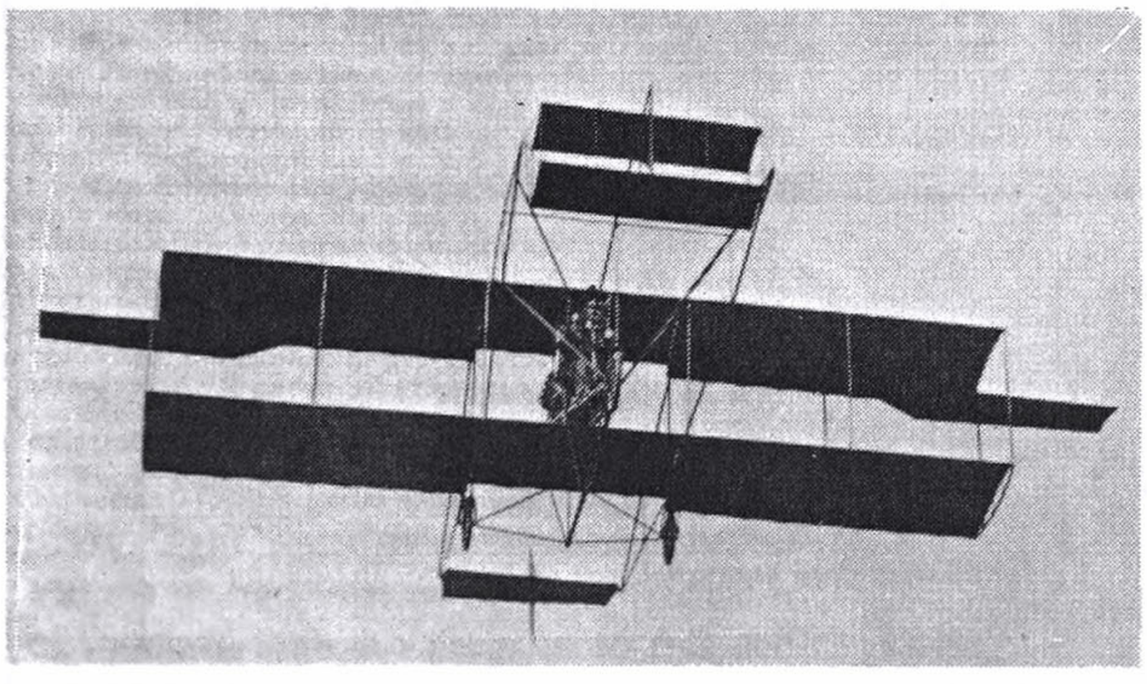

Glen Curtiss at the controls of his June Bug was determined to prove the utility of the airplane to the military. "A.A.H.S. Journal" photo.

GENERAL ARRANGEMENTS CURTISS 1909 BIPLANE PUSHER

MODEL A

AIR AGE INC., 551 FIFTH AVE., NEW YORK 17, N.Y.

SCALE: 1/4" = 1'-0"

DATE:

DRAWN BY ... W.A.WYLAM

COPYRIGHT 1947: WILLIAM A. WYLAM

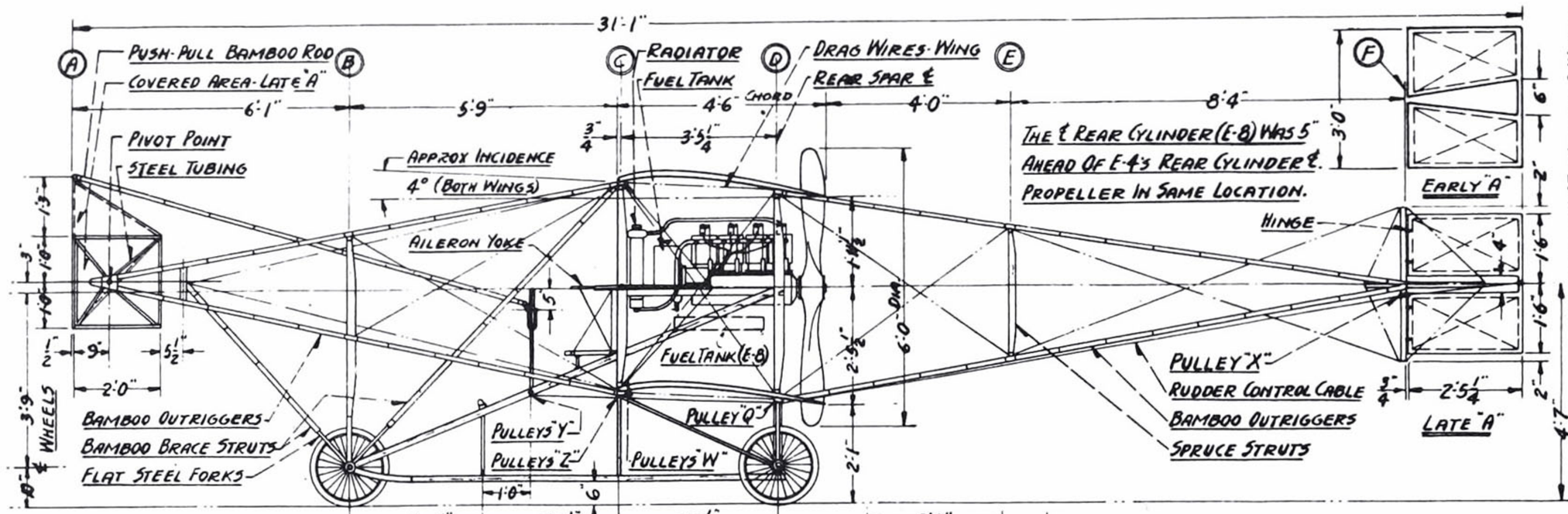

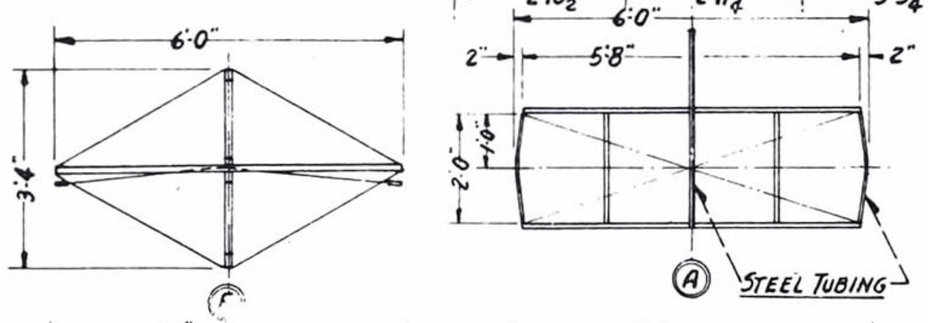

RIBS AT VERTICAL STRUTS WERE PROVIDED WITH LACING HOLES FOR LACING CANVAS TO RIBS; ALL OTHER RIBS WERE PLAIN. COVERING ON UPPER SURFACE ONLY.

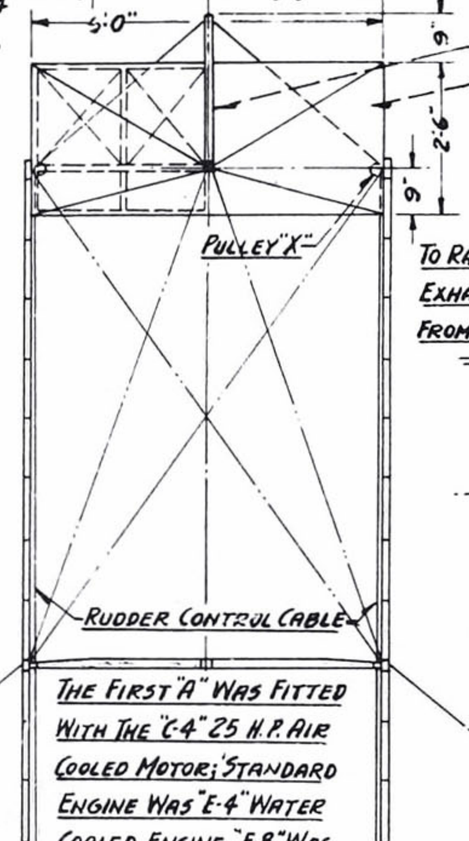

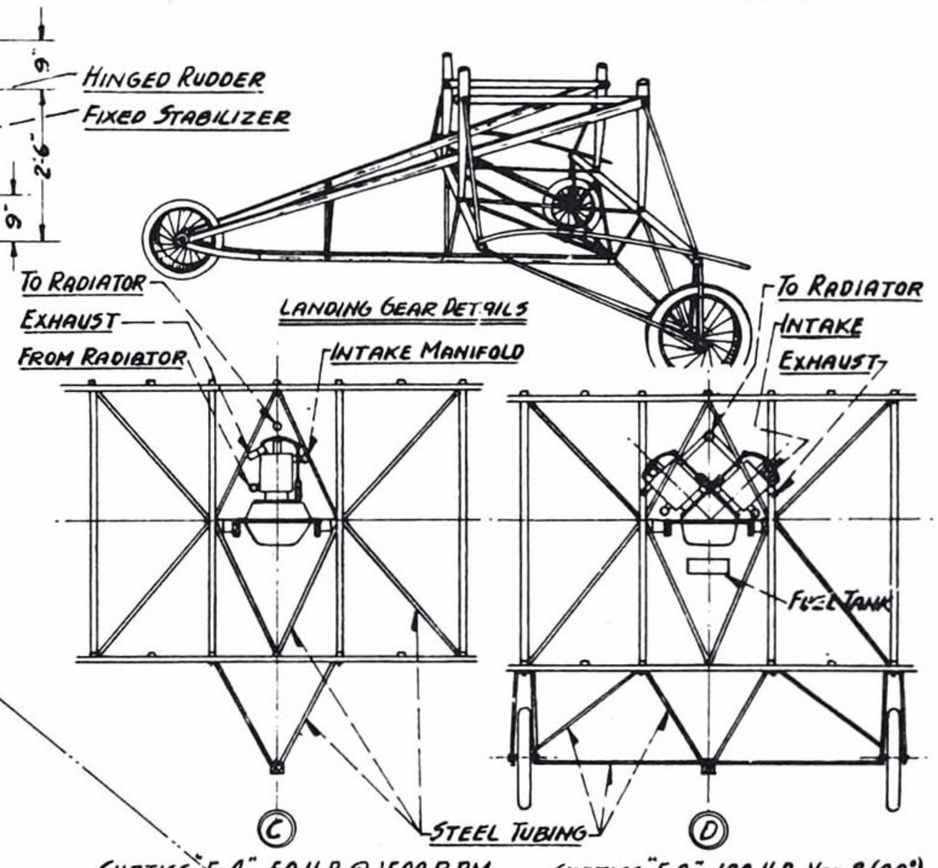

CURTISS "E-4" 50 H.P. @ 1500 R.P.M. 4 CYLINDER IN-LINE WATER COOLED

CURTISS "E-8" - 100 H.P. VEE 8 (90°) (SAME AS "E-4" CYLINDER BANKS)

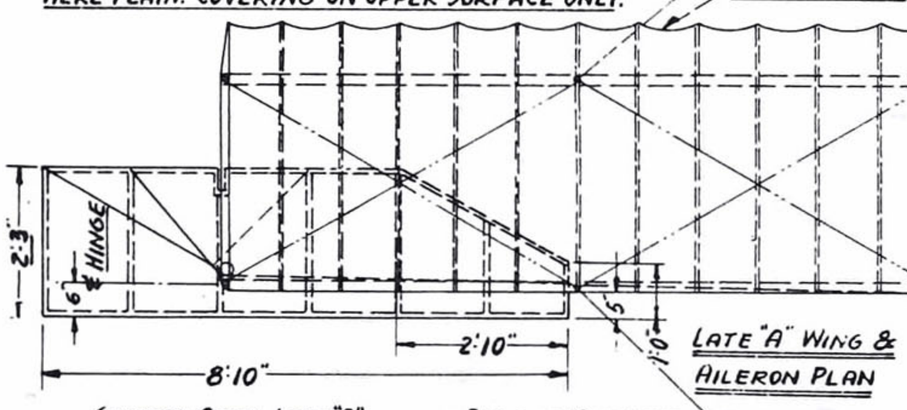

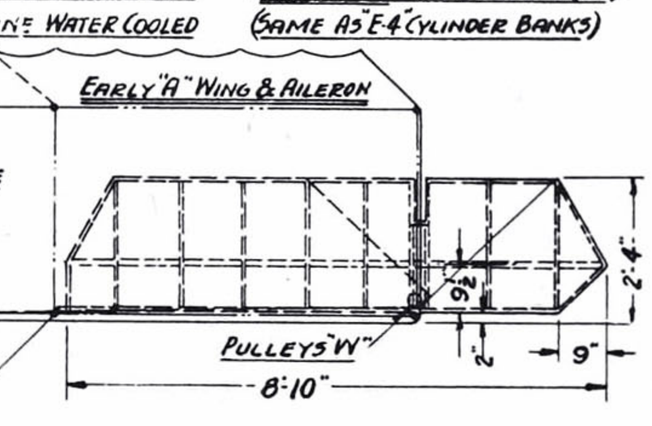

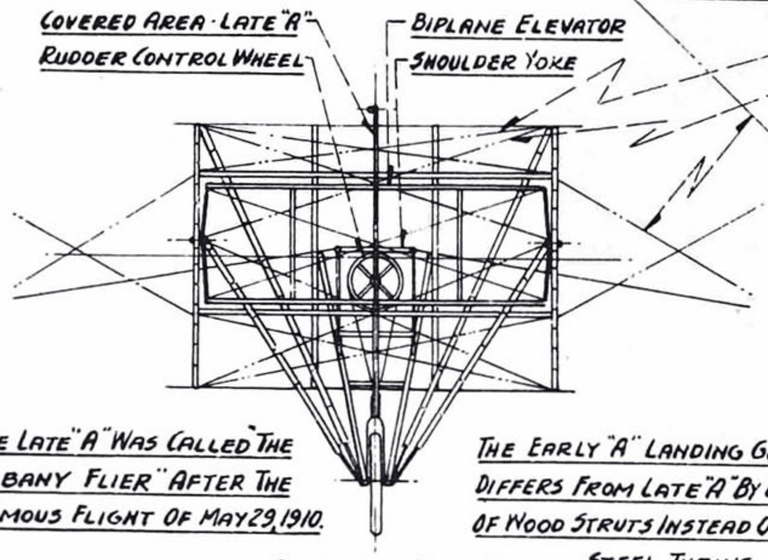

THE LATE "A" WAS CALLED "THE ALBANY FLIER" AFTER THE FAMOUS FLIGHT OF MAY 29, 1910.

OUTRIGGER FRONT-VIEW

THE EARLY "A" LANDING GEAR DIFFERS FROM LATE "A" BY USE OF WOOD STRUTS INSTEAD OF STEEL TUBING.

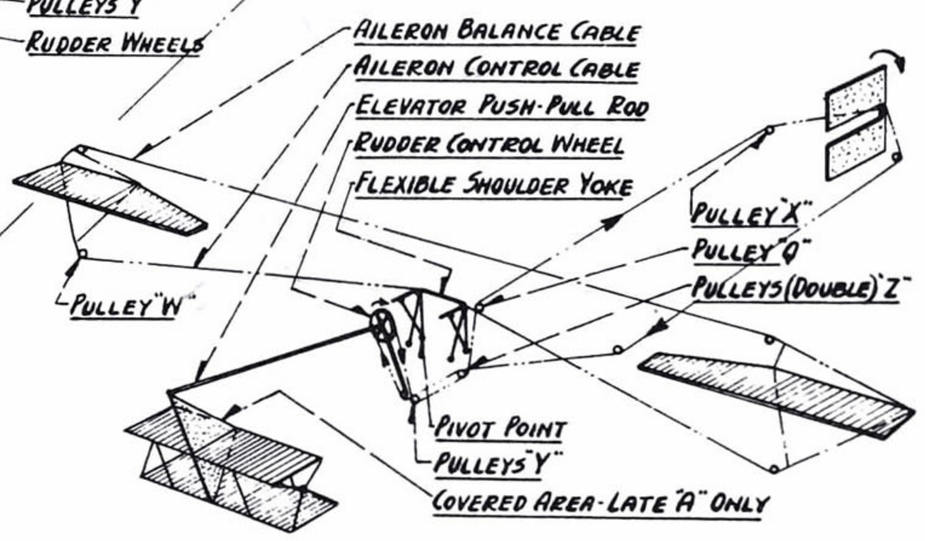

PILOT LEANED RIGHT OR LEFT ON FLEXIBLE SHOULDER YOKE; THIS YOKE WAS MOUNTED ON 8 PIVOTS (4 EACH SIDE). RUDDER TURNED SHIP TO LEFT WHEN THE WHEEL WAS TURNED CLOCKWISE.

ENTIRE AIRPLANE WAS OF NATURAL VARNISH FINISH. ALL METAL FITTINGS & TUBINGS WERE PAINTED ALUMINUM.

DeHavilland D.H.1

drawings by WILLIAM WYLAM

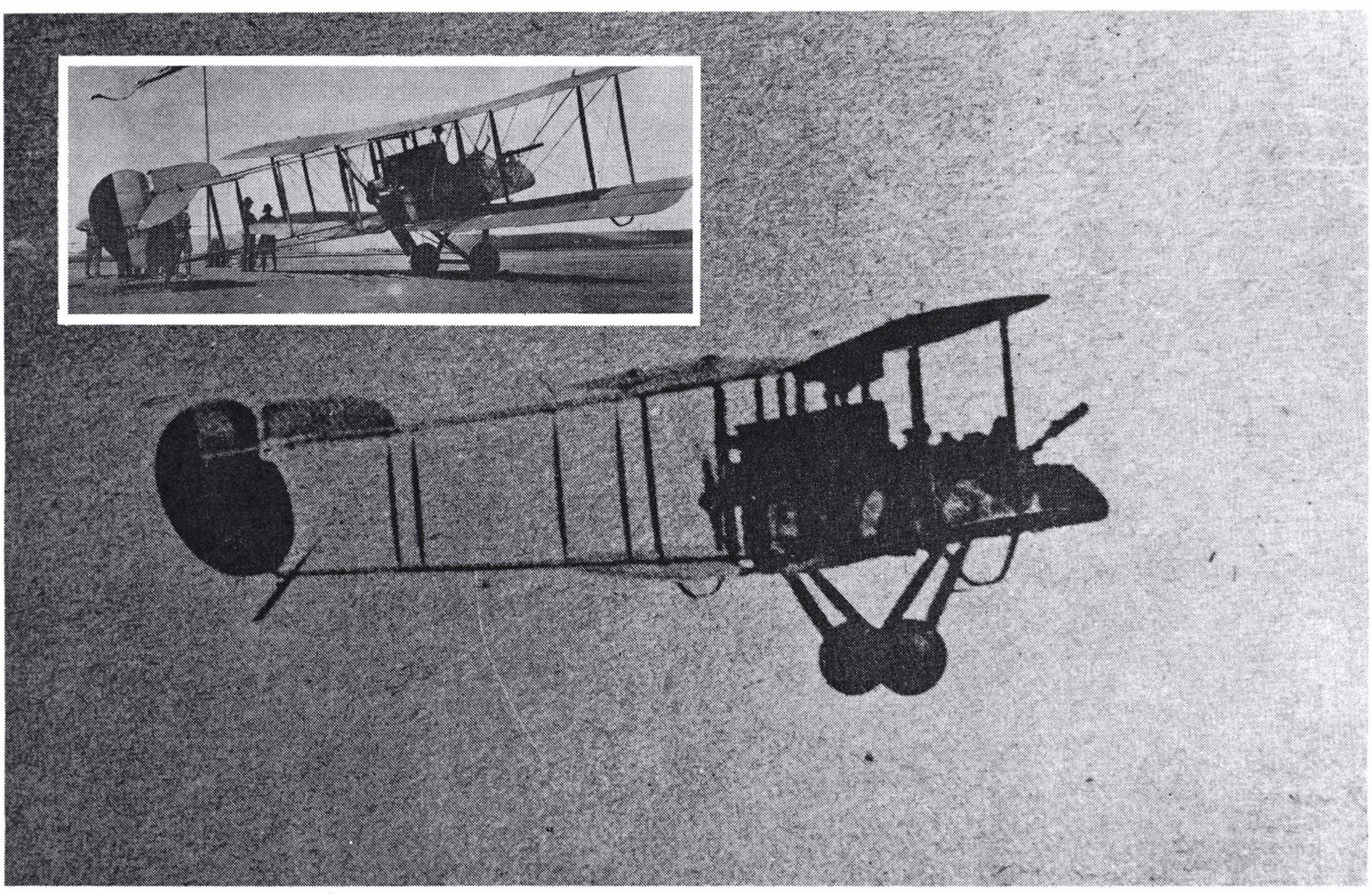

THE deHavilland D.H.1 was a two-bay pusher biplane designed by Geoffrey deHavilland in 1915 while he was with the Aircraft Manufacturing Company, producers of the plane. As simple as they were in those days, aircraft could be designed, built, and test-flown in a matter of just a few months. The D.H.1 was an immediate success and garnered much of that success from the 70-hp Renault V-type air-cooled engine. Its top speed at sea level was 78 mph, and its rate of climb was estimated at something less than 500 fpm.

DeHavilland himself did all the preliminary flight testing on the D.H.1. The lessons he had learned in the application of inherent stability theories to full-size aircraft were incorporated in his new pusher. He demonstrated these qualities very impressively by flying hands off during tests and on low passes.

Although the D.H.1 was never produced in quantity, it was a very good airplane both performance-wise and structurally.

With a good airplane on their hands but no orders, the makers decided to develop the D.H.1 into a more serviceable military design, thus the D.H.1A evolved, which did reach limited production. There are none left. □

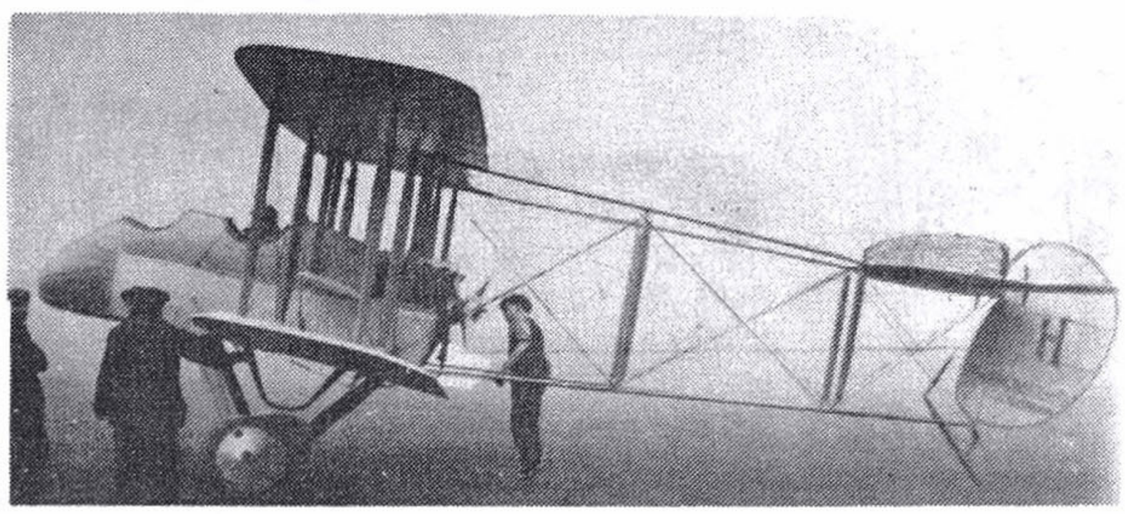

Springboard for the deHavilland aircraft manufacturing firm, the D.H.1 was considered a fine aircraft in its time. Air Age file photos.

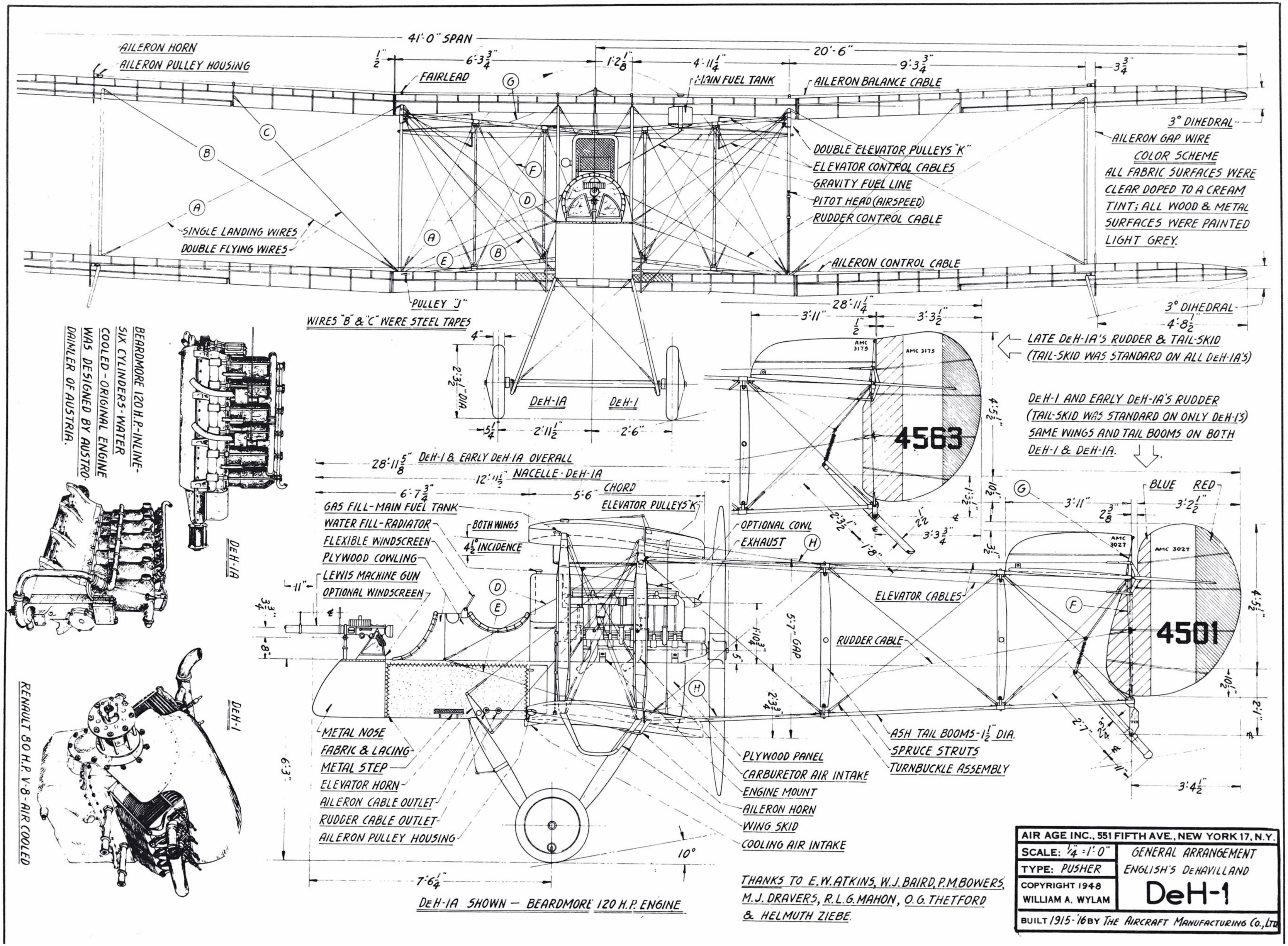
41'-0" SPAN
20'-6"
AILERON HORN
AILERON PULLEY HOUSING
FAIRLEAD
MAIN FUEL TANK
AILERON BALANCE CABLE
3° DIHEDRAL
AILERON GAP WIRE
COLOR SCHEME
ALL FABRIC SURFACES WERE CLEAR DOPED TO A CREAM TINT; ALL WOOD & METAL SURFACES WERE PAINTED LIGHT GREY.
DOUBLE ELEVATOR PULLEYS "K"
ELEVATOR CONTROL CABLES
GRAVITY FUEL LINE
PITOT HEAD (AIRSPEED)
RUDDER CONTROL CABLE
SINGLE LANDING WIRES
DOUBLE FLYING WIRES
AILERON CONTROL CABLE
PULLEY "J"
WIRES "B" & "C" WERE STEEL TAPES
3° DIHEDRAL
LATE DeH-1A'S RUDDER & TAIL-SKID
(TAIL-SKID WAS STANDARD ON ALL DeH-1A'S)
DeH-1A
DeH-1
DeH-1 AND EARLY DeH-1A'S RUDDER
(TAIL-SKID WAS STANDARD ON ONLY DeH-1'S)
SAME WINGS AND TAIL BOOMS ON BOTH DeH-1 & DeH-1A.
4563
4501
BEARDMORE 120 H.P.-INLINE-SIX CYLINDERS-WATER COOLED-ORIGINAL ENGINE WAS DESIGNED BY AUSTRO-DAIMLER OF AUSTRIA.
DeH-1A
DeH-1
RENAULT 80 H.P. V-8-AIR COOLED
28'-11 5/8" DeH-1 & EARLY DeH-1A OVERALL
12'-11 1/2" NACELLE-DeH-1A
6'-7 3/4"
5'-6" CHORD
ELEVATOR PULLEYS "K"
GAS FILL-MAIN FUEL TANK
WATER FILL-RADIATOR
FLEXIBLE WINDSCREEN
PLYWOOD COWLING
LEWIS MACHINE GUN
OPTIONAL WINDSCREEN
BOTH WINGS
4 1/2° INCIDENCE
OPTIONAL COWL
EXHAUST
ELEVATOR CABLES
RUDDER CABLE
5'-7" GAP
BLUE
RED
METAL NOSE
FABRIC & LACING
METAL STEP
ELEVATOR HORN
AILERON CABLE OUTLET
RUDDER CABLE OUTLET
AILERON PULLEY HOUSING
PLYWOOD PANEL
CARBURETOR AIR INTAKE
ENGINE MOUNT
AILERON HORN
WING SKID
COOLING AIR INTAKE
ASH TAIL BOOMS-1 1/2" DIA.
SPRUCE STRUTS
TURNBUCKLE ASSEMBLY
7'-6 1/4"
10°
DeH-1A SHOWN — BEARDMORE 120 H.P. ENGINE
THANKS TO E.W. ATKINS, W.J. BAIRD, P.M. BOWERS, M.J. DRAVERS, R.L.G. MAHON, O.G. THETFORD & HELMUTH ZIEBE.
AIR AGE INC., 551 FIFTH AVE., NEW YORK 17, N.Y.
SCALE: 1/4" = 1'-0"
TYPE: PUSHER
COPYRIGHT 1948 WILLIAM A. WYLAM
GENERAL ARRANGEMENT
ENGLISH'S DeHAVILLAND
DeH-1
BUILT 1915-'16 BY THE AIRCRAFT MANUFACTURING CO., LTD.

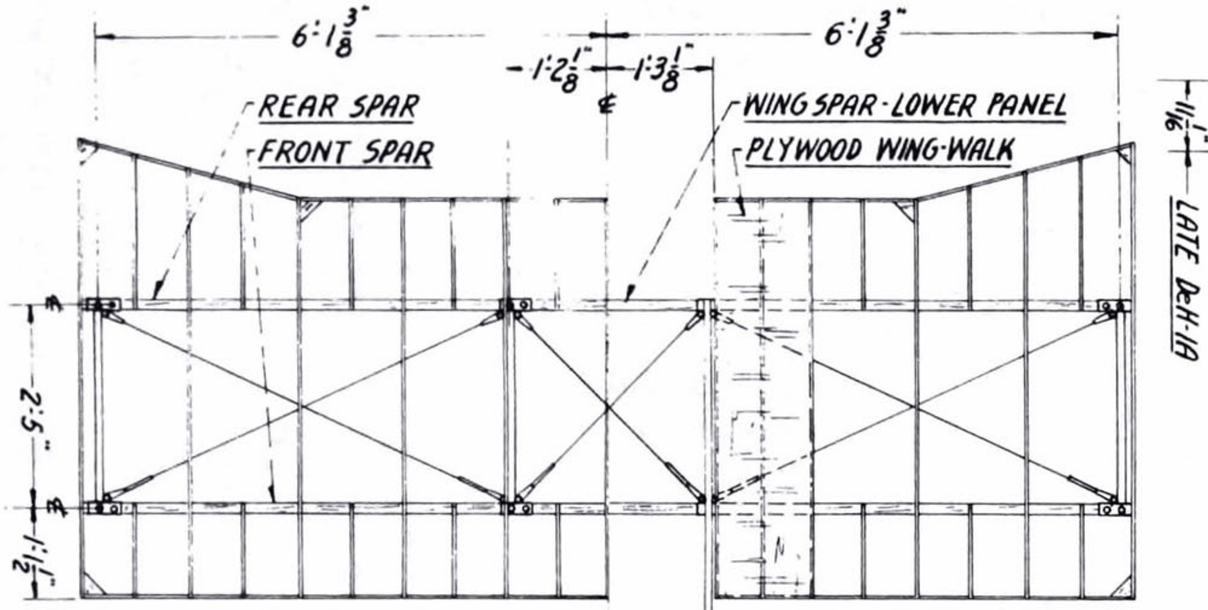

UPPER CENTER WING PANEL
(ONE CONTINUOUS UNIT)

LOWER CENTER WING PANEL
(R.H. & L.H. UNITS ON SAM FRONT & REAR SPARS)

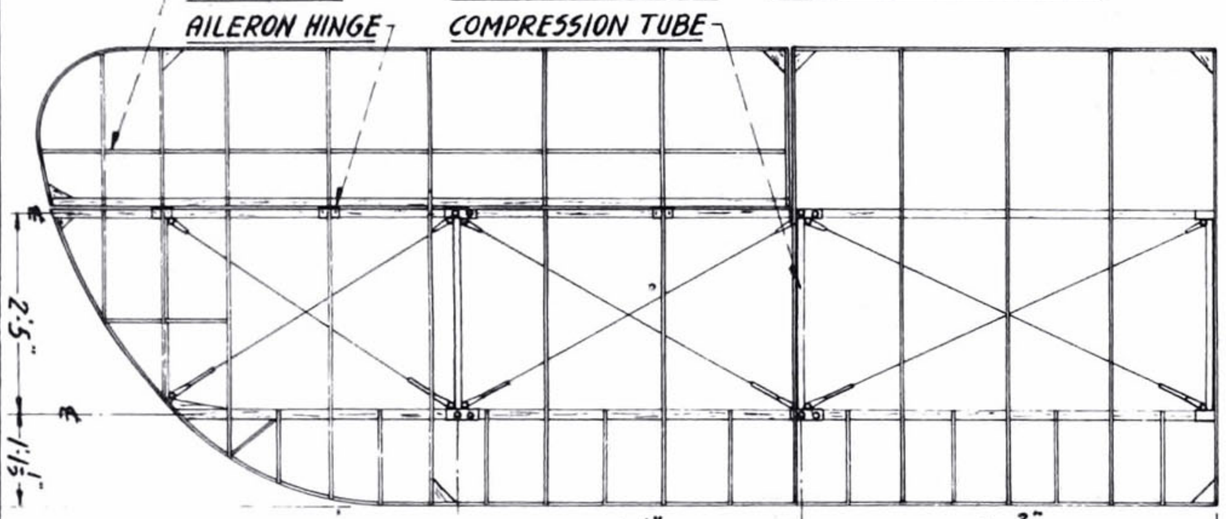

OUTER WING PANELS

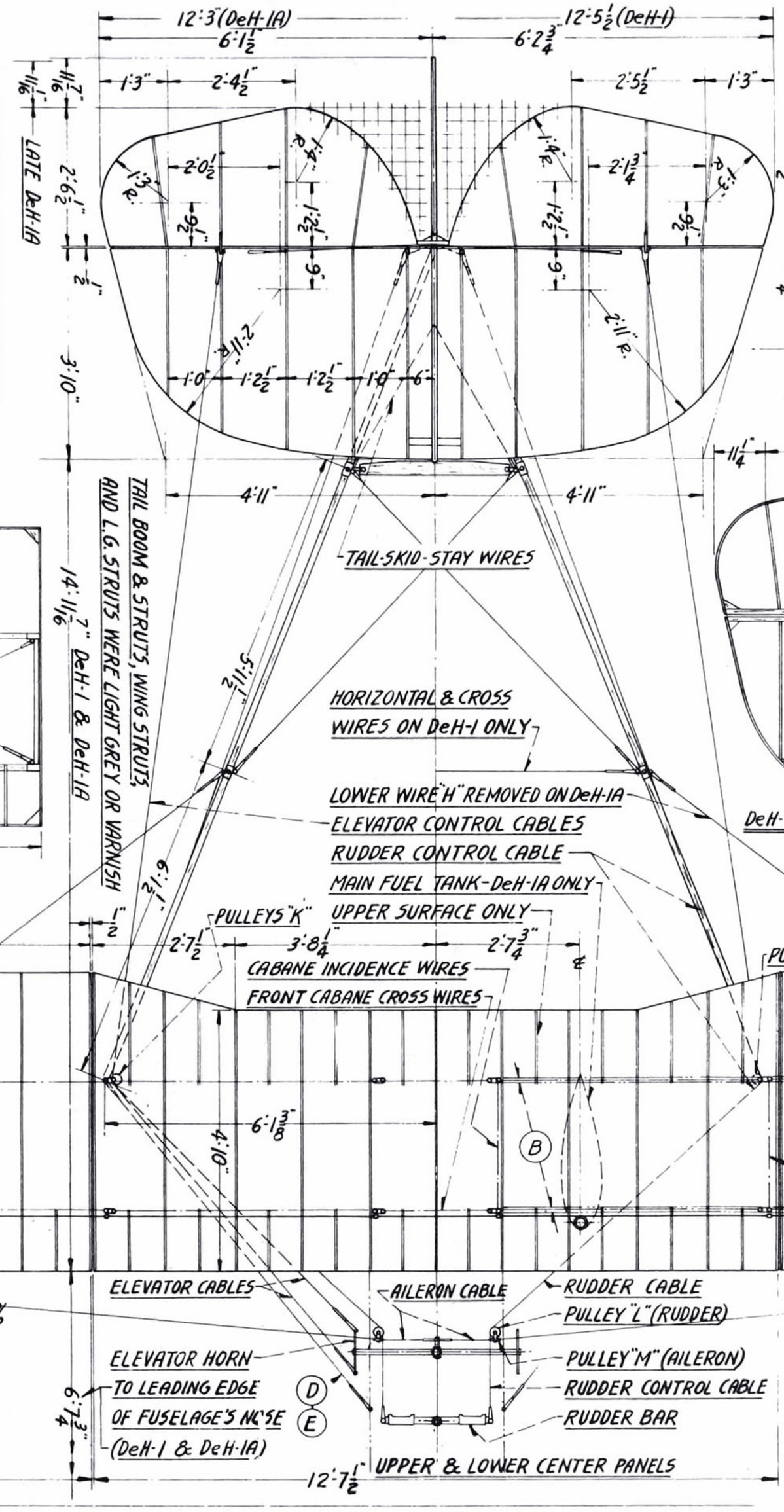

ENTIRE VERTICAL & HORIZONTAL STABILIZERS WERE OF WOODEN CONSTN

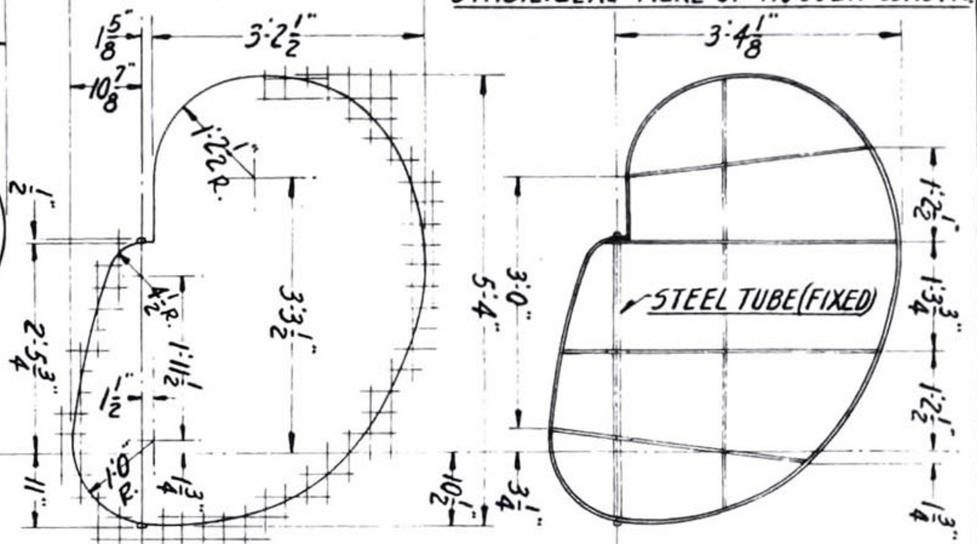

RUDDER LAYOUT

RUDDER STRUCTURE

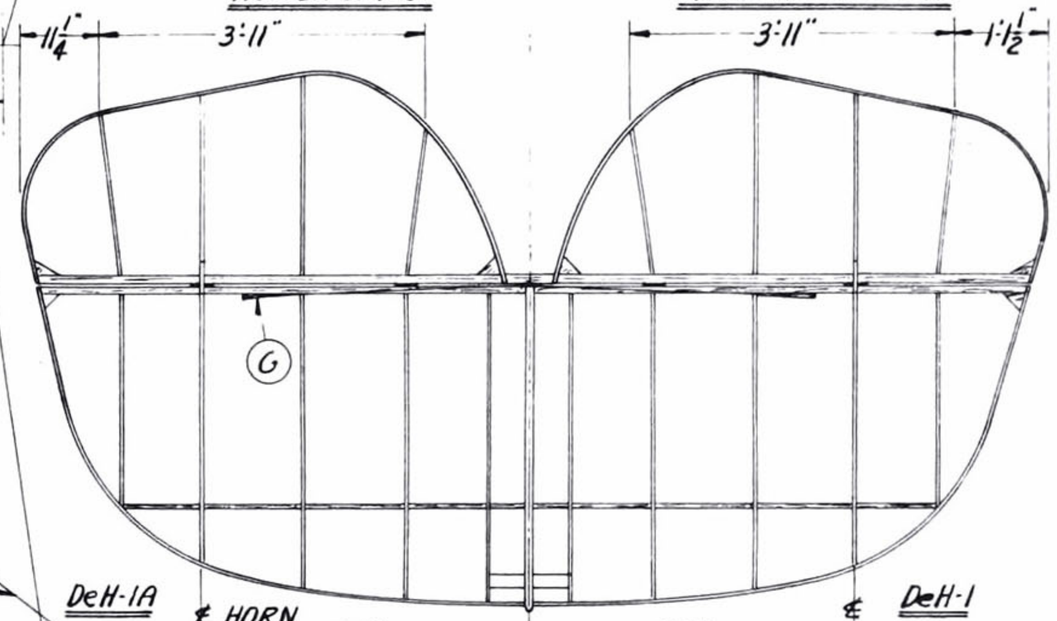

DeH-1A HORN DeH-1

HORIZONTAL STABILIZER & ELEVATOR

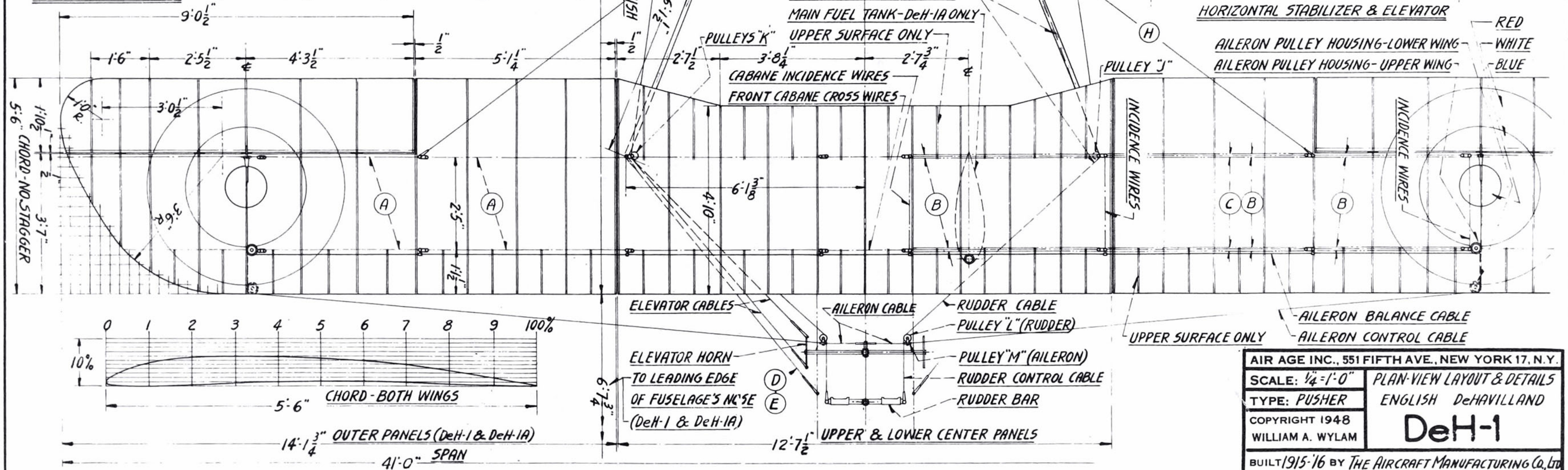

AIR AGE INC., 551 FIFTH AVE., NEW YORK 17, N.Y.

SCALE: 1/4"=1'-0" | PLAN-VIEW LAYOUT & DETAILS

TYPE: PUSHER | ENGLISH DeHAVILLAND

DeH-1

BUILT 1915-16 BY THE AIRCRAFT MANUFACTURING Co, Ltd

COPYRIGHT 1948 WILLIAM A. WYLAM

TYPICAL DeH-1 & DeH-1A RIB DETAILS

CLOCKWISE

9'-0" DIA.

BEARDMORE PROPELLER

PLYWOOD PLATFORM

ELEVATOR HORN

AILERON TORQUE TUBE

DeH-1A

DeH-1

RADIATOR HOUSING

AIR INTAKE (COOLING)

MAIN FUEL TANK

BEARDMORE 120 H.P.
RENAULT 80 H.P.

DUAL CONTROLS ON DeH-1 ONLY

DeH-1 WITH RENAULT 80 H.P. AIR COOLED V-8. USED FOR TRAINING & HOME DEFENSE

ELEVATOR CONTROL CABLES

NACELLE LENGTH - DeH-1

PULLEYS "K" (INBOARD STRUTS)

	DeH-1	DeH-1A
A	2'-2"	2'-6"
B	3'-11½"	3'-8"
C	2'-0"	2'-4½"

3'-4½" DeH-1 (TRUE)

3'-6½" DeH-1A

SHOCKCORD SLOT

LANDING GEAR STRUT LAYOUT

REAR SPREADER TUBE

PLYWOOD

METAL

FABRIC

WIRE REINFORCEMENT

WOODEN L.G. STRUTS

FOOT STIRRUP

TO RUDDER

TO AILERON

ELEVATOR

PULLEY "J" (INBOAD STRUTS)

BUILT-UP SUB-WING (DETAILS ARE UNKNOWN)

FRONT & REAR L.G. BRACE WIRES

OPEN SPACE

FRONT & REAR SPARS (LOWER CENTER PANEL)

DeH-1A ONLY

DeH-1 & DeH-1A BOTTOMVIEW

COUNTER-CLOCKWISE (FROM FRONT VIEW)

AILERON QUADRANT

RENAULT PROPELLER

ALTIMETER
IGNITION
CLOCK
COMPASS
TACHOMETER
PRIMER

ELEVATOR HORN

PULLEYS "M"

AILERON GAP WIRE

INCIDENCE WIRES

OUTBOARD STRUTS

ALL STRUTS WERE STREAMLINED

INBOARD STRUTS

FIN STRUCTURE

1½" DIA. BOOMS

STEEL ROD WAS RUDDER PIVOT & TAIL BOOM'S UPRIGHT STRUT

APPROX.

APPROX

ALL SQUARES = 3"

FUSELAGE LAYOUT

INSTRUMENT PANEL
FRONT SEAT
THROTTLE
CONTROL COLUMN
RUDDER BAR

ELEVATOR PUSH-PULL ROD
AILERON TORQUE ROD

FUSELAGE DETAILS

PILOT SEAT
PLYW'D. SUPPORT

RUDDER CONTROL CABLE
REAR RUDDER BAR
ELEVATOR CONTROL HORN

SUPPORT BEARINGS
AILERON QUADRANT
PULLEYS "L" (RUDDER'S)
PULLEYS "M" (AILERON'S)

THANKS, ALSO, TO CHARLES DONALD & CASIMIR PAWLAK

AIR AGE INC., 551 FIFTH AVE., NEW YORK 17, N.Y.	
SCALE: 1/4" = 1'-0"	FUSELAGE LAYOUT & DETAILS ENGLISH'S DeHAVILLAND
TYPE: PUSHER	DeH-1
COPYRIGHT 1948 WILLIAM A. WYLAM	
BUILT 1915-16 BY THE AIRCRAFT MANUFACTURING Co., Ltd.	

DeHavilland D.H.4

drawings by WILLIAM WYLAM

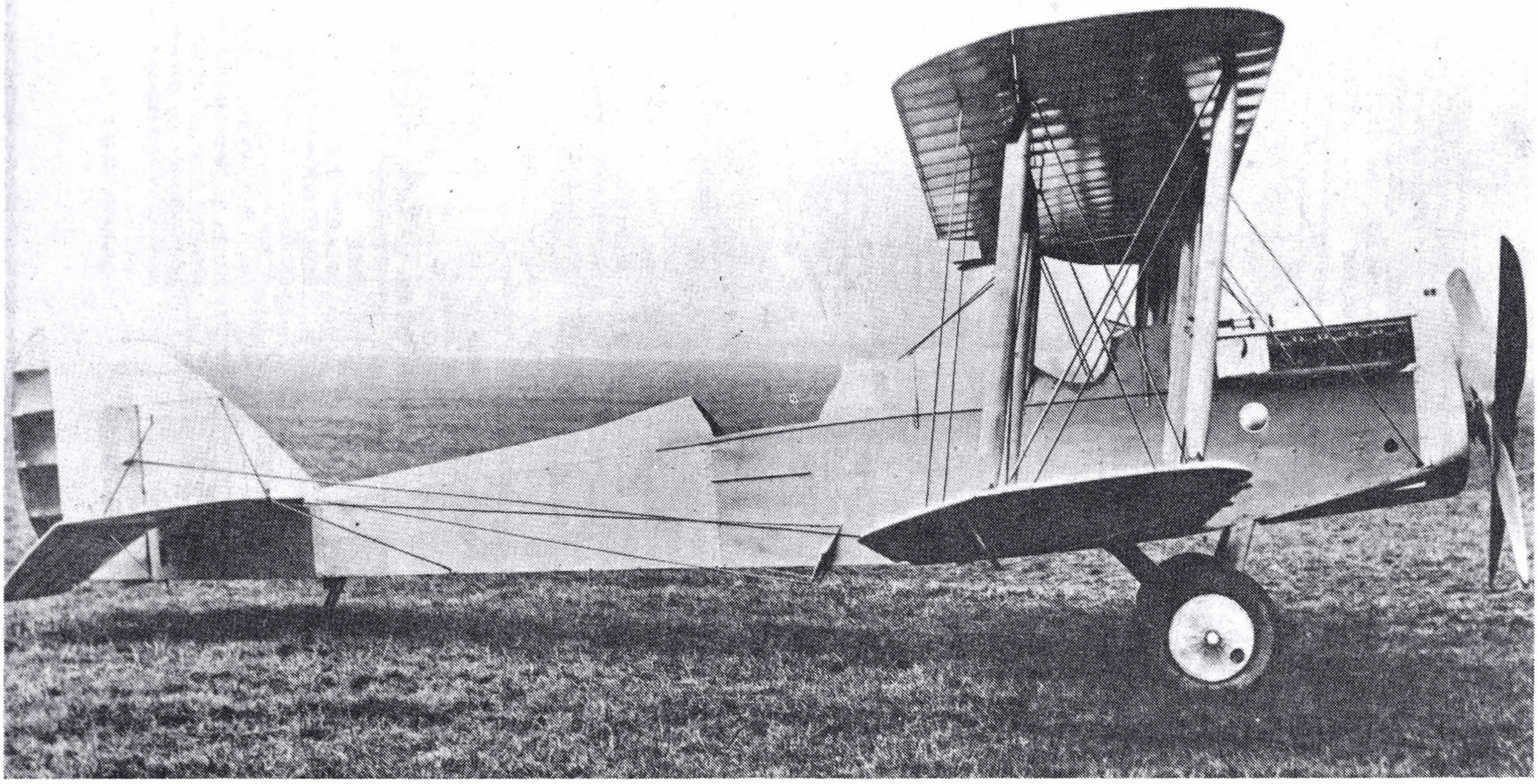

Entered into service in 1916, the D.H.4 had a long and productive life despite its reputation as a "flying death trap." "Model Airplane News" photo.

THE BRITISH firm known as the Aircraft Manufacturing Company was founded by G. Holt Thomas in 1912, and among its talented designers was Geoffrey deHavilland. Credited with many successful designs, deHavilland was prolific. In June 1916 mechanics rolled out the prototype of the now famous D.H.4 biplane, which was later to be both condemned and praised for its characteristics and fighting abilities. The ship was big and beautiful, yet in some respects ungainly and unsafe.

The first production models to go into service in 1916 were fitted with a variety of engines from 200-260 hp. The completely enclosed fuselage with its occupants sitting in tandem was not new, but the fact that the gunner member of the crew sat in the rear seat was. The greatest influence in the change of crew positions was the advent of the synchronized gun on the cowling.

Later versions of the D.H.4 made use of the Rolls-Royce Falcon engine and later still the Eagle engine, which produced 375 hp.

Throughout the history of aviation, airplanes have been given nicknames, most of them of a complimentary nature, and which were supposed to describe the plane's most outstanding characteristics. "Flaming Coffin" was attached to the D.H.4 early in its career, because the fuel tank was positioned between the cockpits. Its excellent handling qualities and large speed range encouraged development, and in the DH-4B (American designation) the pilot was moved back and the tank forward.

Six D.H.4's are left, in various models in various conditions. □

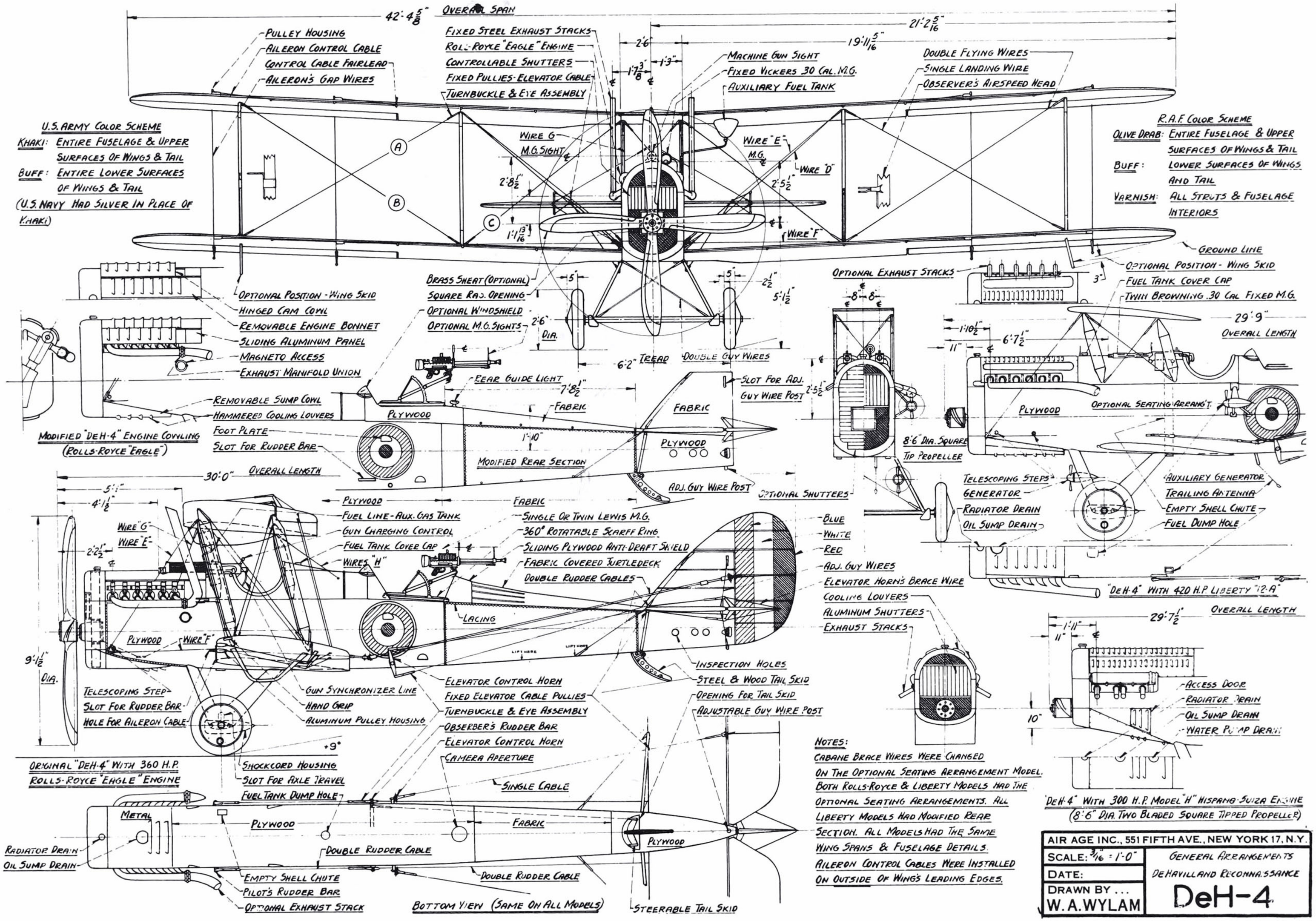

AIR AGE INC., 551 FIFTH AVE., NEW YORK 17, N.Y.	
SCALE: 3/16" = 1'-0"	GENERAL ARRANGEMENTS
DATE:	DE HAVILLAND RECONNAISSANCE
DRAWN BY ... W.A.WYLAM	DeH-4

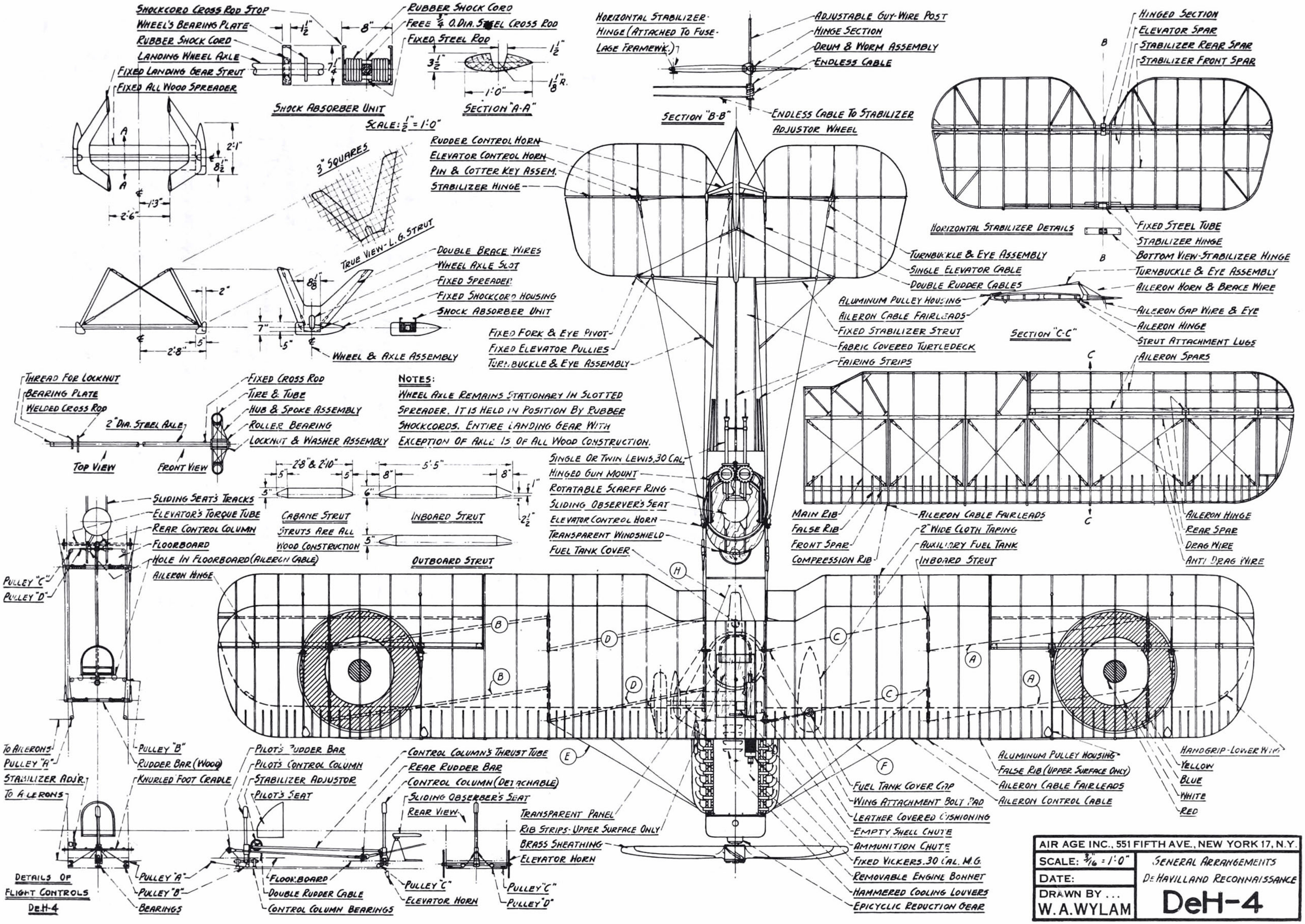
Shockcord Cross Rod Stop
Wheel's Bearing Plate
Rubber Shock Cord
Landing Wheel Axle
Fixed Landing Gear Strut
Fixed All Wood Spreader
Shock Absorber Unit
Rubber Shock Cord
Free ¼ O.Dia. Steel Cross Rod
Fixed Steel Rod
Section "A-A"
Scale: ½" = 1'-0"
Horizontal Stabilizer Hinge (Attached To Fuselage Framework.)
Section "B-B"
Adjustable Guy-Wire Post
Hinge Section
Drum & Worm Assembly
Endless Cable
Endless Cable To Stabilizer Adjustor Wheel
Hinged Section
Elevator Spar
Stabilizer Rear Spar
Stabilizer Front Spar
Horizontal Stabilizer Details
Fixed Steel Tube
Stabilizer Hinge
Bottom View-Stabilizer Hinge
3" Squares
True View-L.G. Strut
Rudder Control Horn
Elevator Control Horn
Pin & Cotter Key Assem.
Stabilizer Hinge
Double Brace Wires
Wheel Axle Slot
Fixed Spreader
Fixed Shockcord Housing
Shock Absorber Unit
Wheel & Axle Assembly
Fixed Fork & Eye Pivot
Fixed Elevator Pullies
Turnbuckle & Eye Assembly
Turnbuckle & Eye Assembly
Single Elevator Cable
Double Rudder Cables
Aluminum Pulley Housing
Aileron Cable Fairleads
Fixed Stabilizer Strut
Fabric Covered Turtledeck
Fairing Strips
Section "C-C"
Turnbuckle & Eye Assembly
Aileron Horn & Brace Wire
Aileron Gap Wire & Eye
Aileron Hinge
Strut Attachment Lugs
Aileron Spars
Thread For Locknut
Bearing Plate
Welded Cross Rod
2" Dia. Steel Axle
Top View
Front View
Fixed Cross Rod
Tire & Tube
Hub & Spoke Assembly
Roller Bearing
Locknut & Washer Assembly
Notes:
Wheel Axle Remains Stationary In Slotted Spreader. It Is Held In Position By Rubber Shockcords. Entire Landing Gear With Exception Of Axle Is Of All Wood Construction.
Cabane Strut
Struts Are All Wood Construction
Inboard Strut
Outboard Strut
Single Or Twin Lewis .30 Cal.
Hinged Gun Mount
Rotatable Scarff Ring
Sliding Observer's Seat
Elevator Control Horn
Transparent Windshield
Fuel Tank Cover
Main Rib
False Rib
Front Spar
Compression Rib
Aileron Cable Fairleads
2" Wide Cloth Taping
Auxiliary Fuel Tank
Inboard Strut
Aileron Hinge
Rear Spar
Drag Wire
Anti Drag Wire
Sliding Seat's Tracks
Elevator's Torque Tube
Rear Control Column
Floorboard
Hole In Floorboard (Aileron Cable)
Aileron Hinge
Pulley "C"
Pulley "D"
To Ailerons
Pulley "A"
Stabilizer Adj'r.
To Ailerons
Pulley "B"
Rudder Bar (Wood)
Knurled Foot Cradle
Details Of Flight Controls DeH-4
Pulley "A"
Pulley "B"
Bearings
Pilot's Rudder Bar
Pilot's Control Column
Stabilizer Adjustor
Pilot's Seat
Floorboard
Double Rudder Cable
Control Column Bearings
Control Column's Thrust Tube
Rear Rudder Bar
Control Column (Detachable)
Sliding Observer's Seat
Rear View
Pulley "C"
Elevator Horn
Transparent Panel
Rib Strips-Upper Surface Only
Brass Sheathing
Elevator Horn
Pulley "C"
Pulley "D"
Fuel Tank Cover Cap
Wing Attachment Bolt Pad
Leather Covered Cushioning
Empty Shell Chute
Ammunition Chute
Fixed Vickers .30 Cal. M.G.
Removable Engine Bonnet
Hammered Cooling Louvers
Epicyclic Reduction Gear
Aluminum Pulley Housing
False Rib (Upper Surface Only)
Aileron Cable Fairleads
Aileron Control Cable
Handgrip-Lower Wing
Yellow
Blue
White
Red
AIR AGE INC., 551 FIFTH AVE., NEW YORK 17, N.Y.
SCALE: 3/16" = 1'-0"
DATE:
DRAWN BY ... W.A.WYLAM
General Arrangements
De Havilland Reconnaissance
DeH-4

MOUNTING BOLT HOLES WERE LOCATED TO SUIT AIRPLANE STRUCTURE. BELOW IS TYPICAL FOR INSTALLATION ON PLYWOOD DECK.

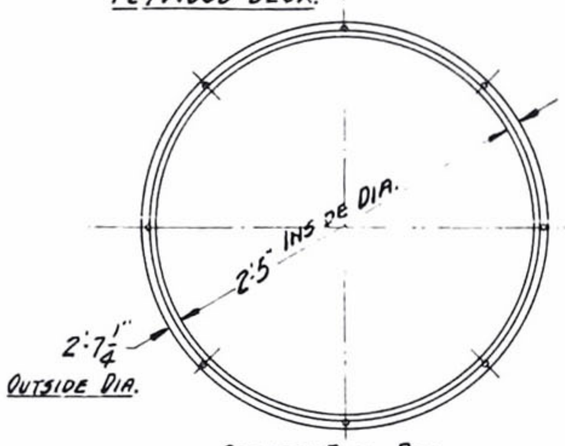

SCARFF RING RAIL
MACHINED BRASS CASTING

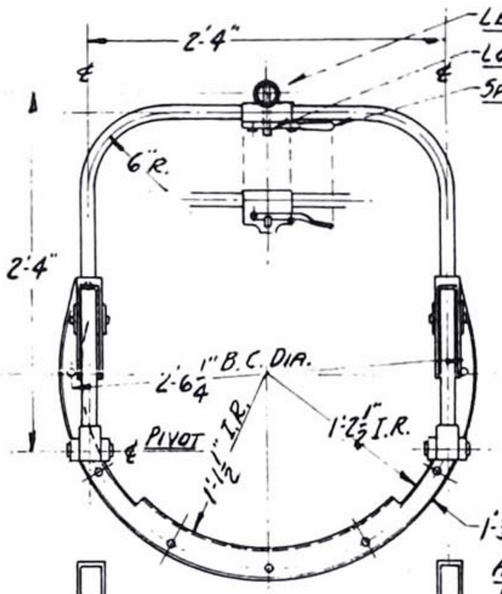

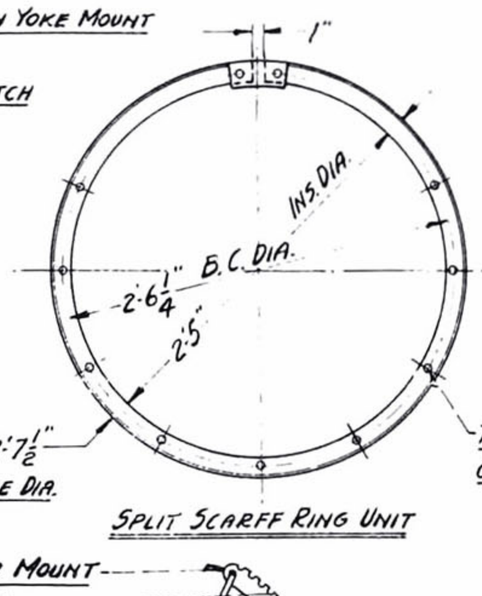

SPLIT SCARFF RING UNIT

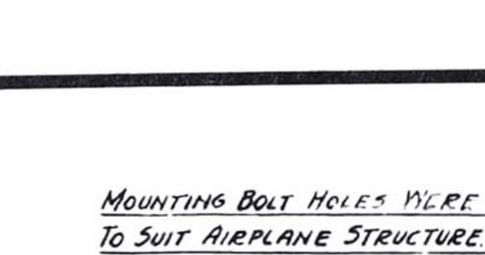

DOUBLE GUN YOKE

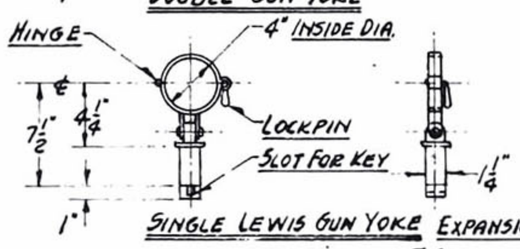

SINGLE LEWIS GUN YOKE

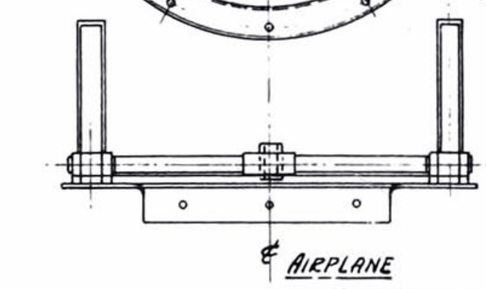

GUN MOUNT ASSEMBLY
ALL ALUMINUM

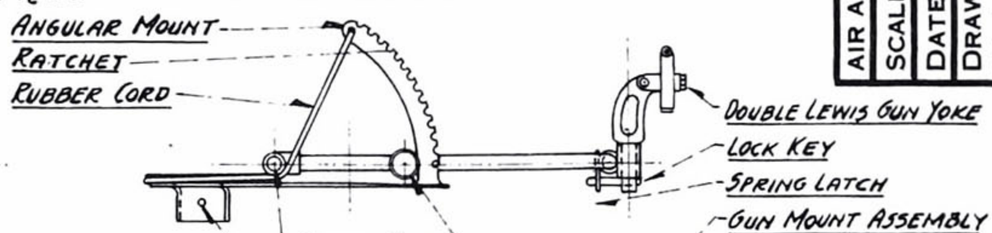

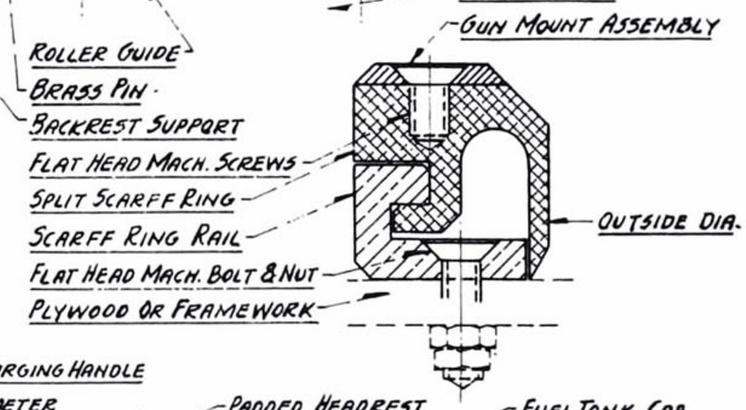

NOTES:
SPLIT SCARFF RING UNIT IS SLIPPED ONTO RING RAIL; CLASP PART IS ATTACHED MAKING TWO INTREGAL ROTATABLE UNIT. OIL IS USED FOR LUBRICANT BETWEEN FINISHED MACHINED SURFACES. GUN MOUNT ASSEMBLY WAS ATTACHED AFTER SCARFF RING WAS MOUNTED ONTO AIRPLANE DECK. GUN YOKE WAS REMOVED BY PRESSING SPRING LATCH & REMOVING LOCK KEY.

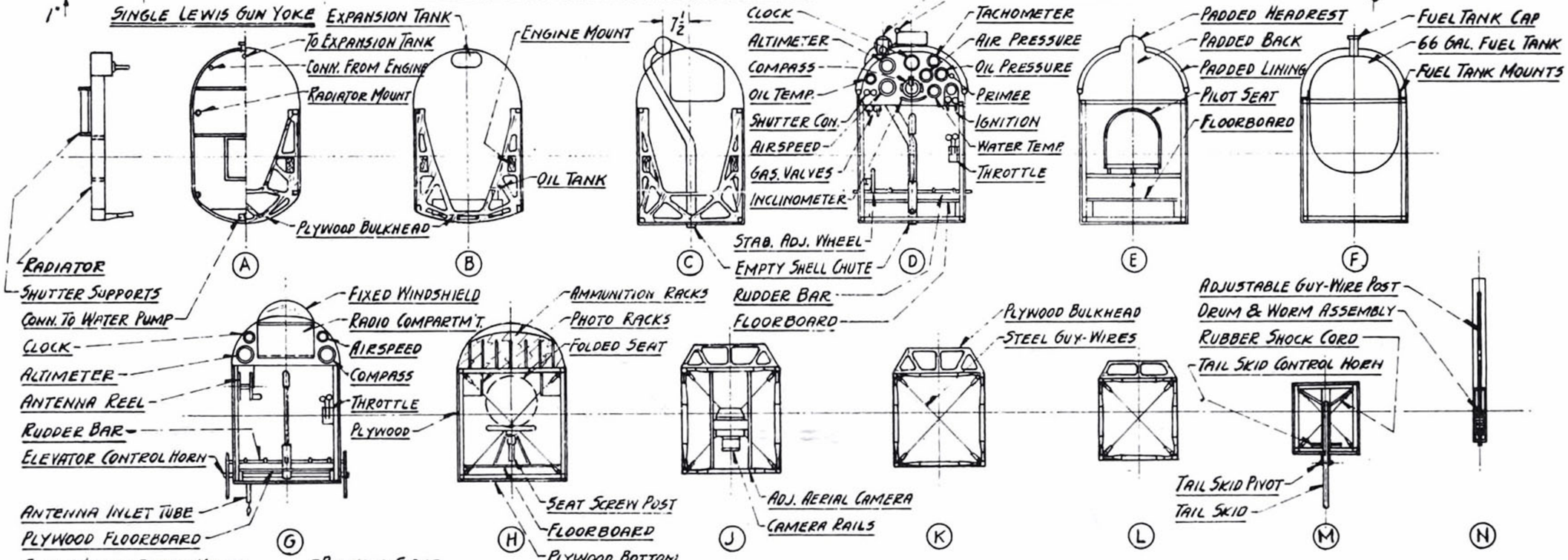

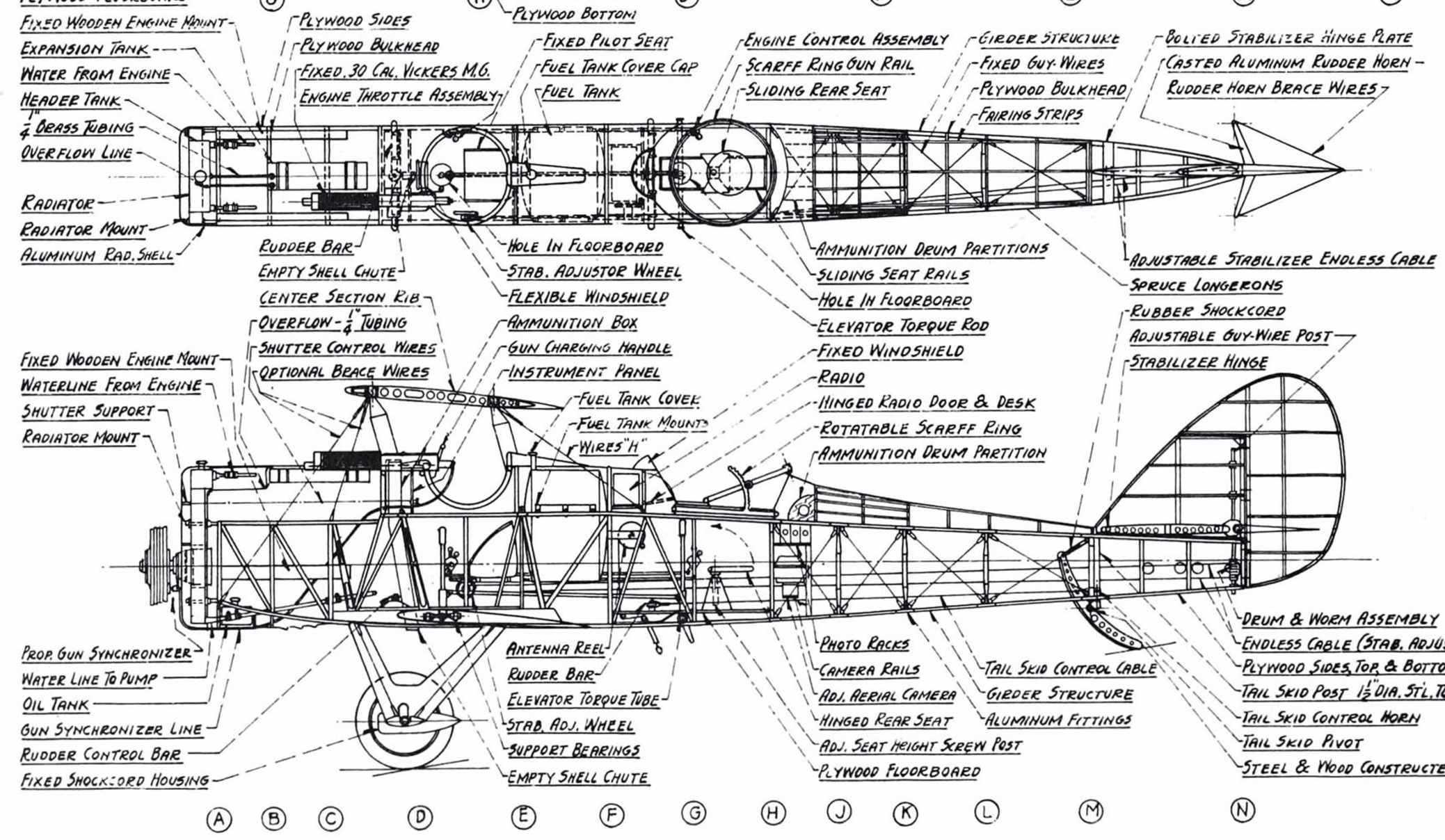

AIR AGE INC., 551 FIFTH AVE., NEW YORK 17, N.Y.
SCALE: 3/16" = 1'-0"
DATE:
DRAWN BY ... W.A.WYLAM
FUSELAGE & SCARFF RING DETAILS
DEHAVILLAND RECONNAISSANCE
DeH-4

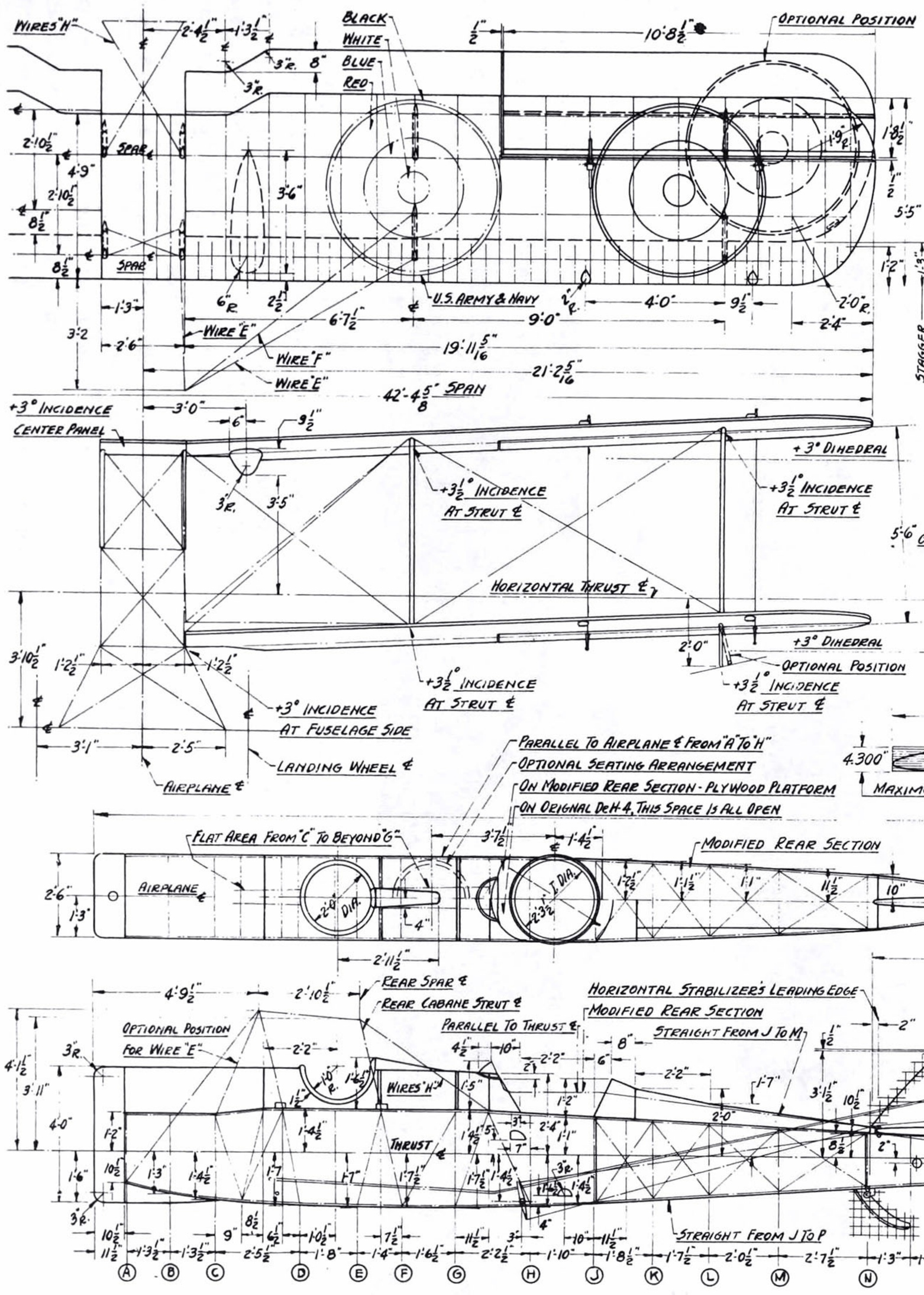

AIR AGE INC., 551 FIFTH AVE., NEW YORK 17, N.Y.

SCALE: 3/16 = 1'-0"	GENERAL LAYOUT DATA
DATE:	DEHAVILLAND RECONNAISANCE
DRAWN BY ... W.A.WYLAM	DeH-4

Fokker Dr.1

drawings by JOSEPH NIETO

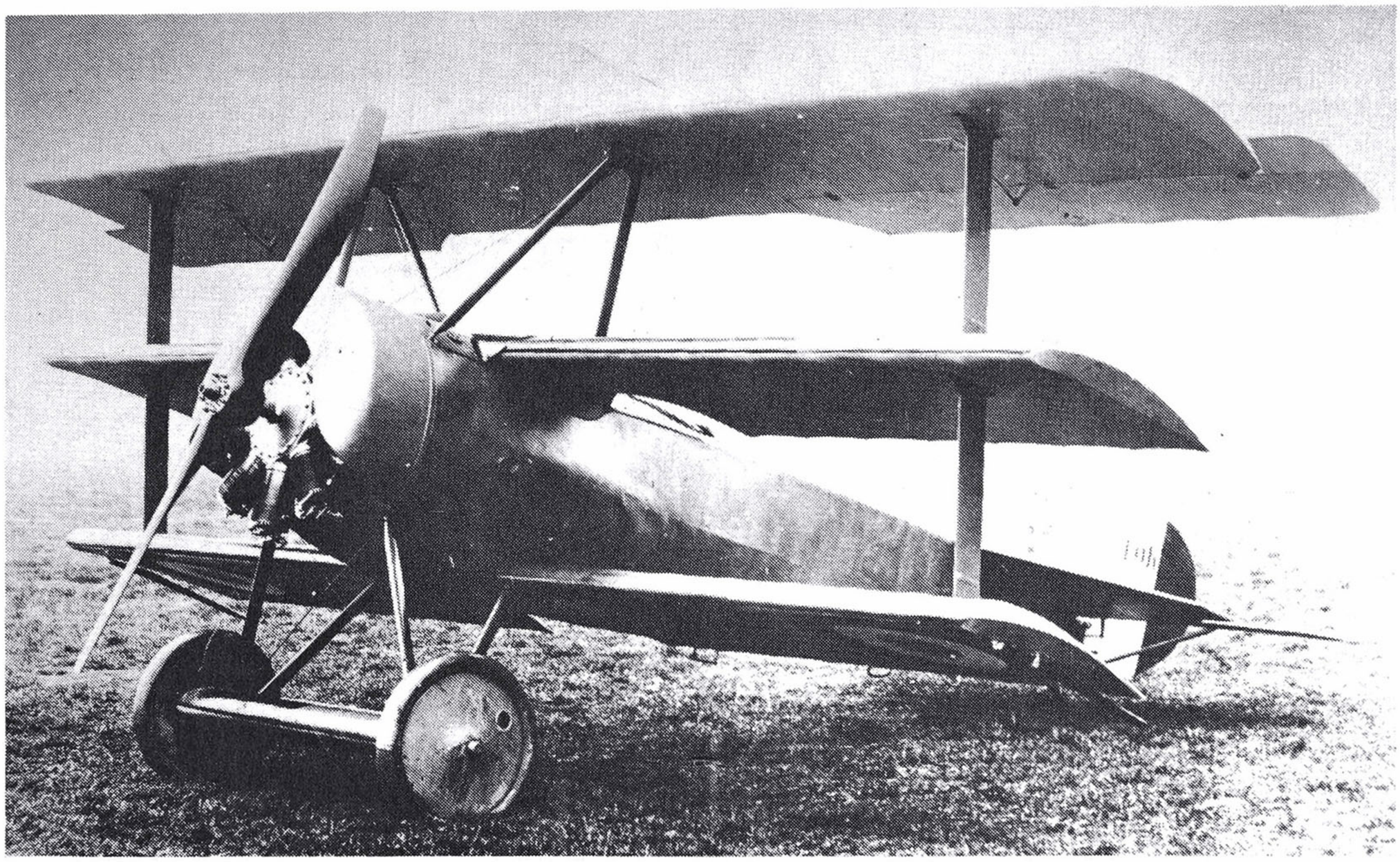

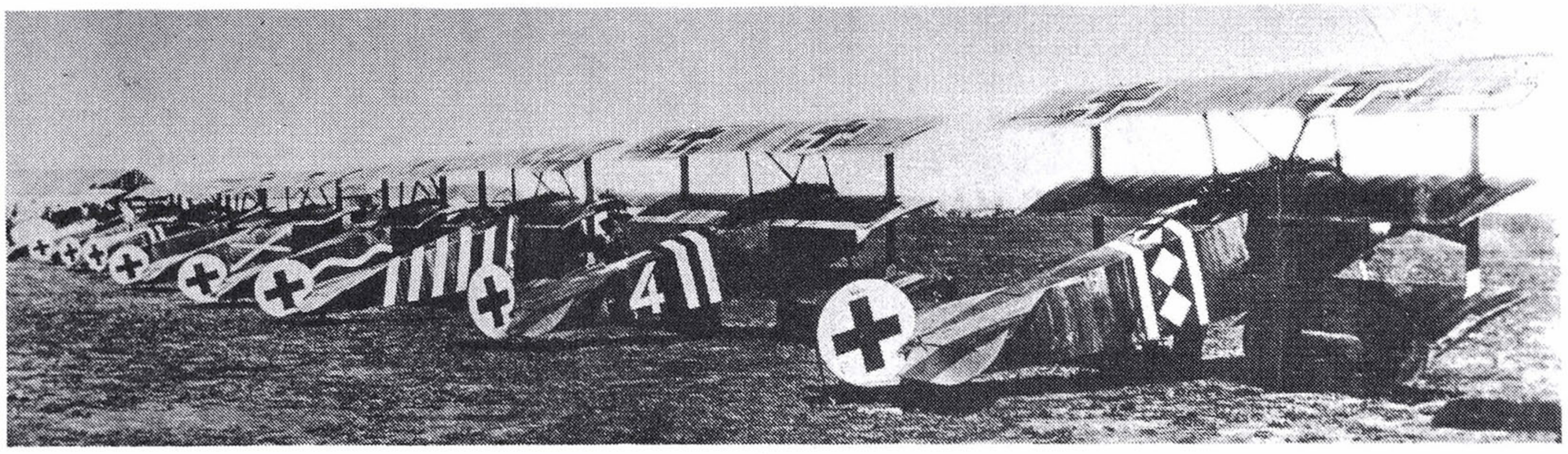

An airplane without flying wires, particularly a fighter, was unheard of in 1915. Anthony Fokker proved that self-supporting flying surfaces were not only practical but advantageous in his triplane. Air Age file photos.

ONE OF the most unusual fighters of WW I, the Fokker Triplane was also the most agile fighting machine during that period. Designed for dog fighting, the ship was unequaled in its ability to out-maneuver anything in the air. It quickly became apparent to German fighter pilots that the Dr.1 was the ship to fly when Manfred von Richthofen scored a victory on his first time out with the new design. The second time out he scored another. It also became apparent to British pilots that the Germans had something to reckon with.

One of the most unusual aspects of this design, other than its being a triplane, was that it had no wires. Today this seems academic, but in 1915 design engineers fully expected the wings to fold on any airplane that had non-supported flying surfaces. This airplane proved that a cantilever wing was not only possible, but practical.

Powered by the Oberursel rotary engine rated at 110 hp, the triplane had a top speed of 97 mph and a ceiling of 18,000 feet. The rate of climb was nearly 2,000 fpm and the landing speed in zero wind was only 30 mph. It was feather light on the controls and could literally turn on a dime, causing a near blackout to the pilot at the controls.

Von Richthofen was shot down in one.

Although the service period of the triplane was only seven months, it remains one of the most remembered aircraft of WW I. No original Triplane survived the war. □

Fokker DR.I

AIR AGE INC. 551 FIFTH AVE. NEW YORK, 17, N.Y.

SCALE: ¼" = 1'-0" | GENERAL ARRANGEMENTS AND DETAILS

FULL SIZE: ¾" = 1'-0" | 1918 GERMAN IMPERIAL AIR SERVICE.

KAMPFEINSITZER DRIEDECKER

COPYRIGHT BY: Joseph Nieto.

MIDDLE WING PLAN. ONE SIDE OF TOP WING STRUT IS SHOWN.

SPAN. 20'-6"

9¾" 7⅞"

(CENTER LINE M. GUNS.)

FUEL (MAIN) GUAGE PAD

12¾" 12¾" 12¾"

ILLUSTRATED BELOW, IS THE PLANE FLOWN BY BARON MANFRED FR. VON RICHTHOFEN AS LATE AS APRIL 20, 1918. ON THAT DAY, HIS COMBAT REPORTS STATE HE SHOT DOWN TWO ALLIED PLANES WITH THIS MACHINE. THIS PLANE WAS PURE RED, (LESS SQUARES & RUDDER Nº 1729 SHOWN HERE ONLY FOR ADDED ILLUSTRATION PURPOSES) WHILE THE STRAIGHT (LATIN) CROSSES, ADOPTED APRIL 1, 1918, WERE BLACK, WITH A VERY THIN WHITE OUTLINE AGAINST THE RED BACKGROUND. (NOTE: VARIOUS SOURCES DIFFER AS TO DATE OF CHANGE OF PATEE TO LATIN CROSSES. VARIATIONS FROM JAN. 1, APRIL 1, TO JUNE. 1, 1918.)

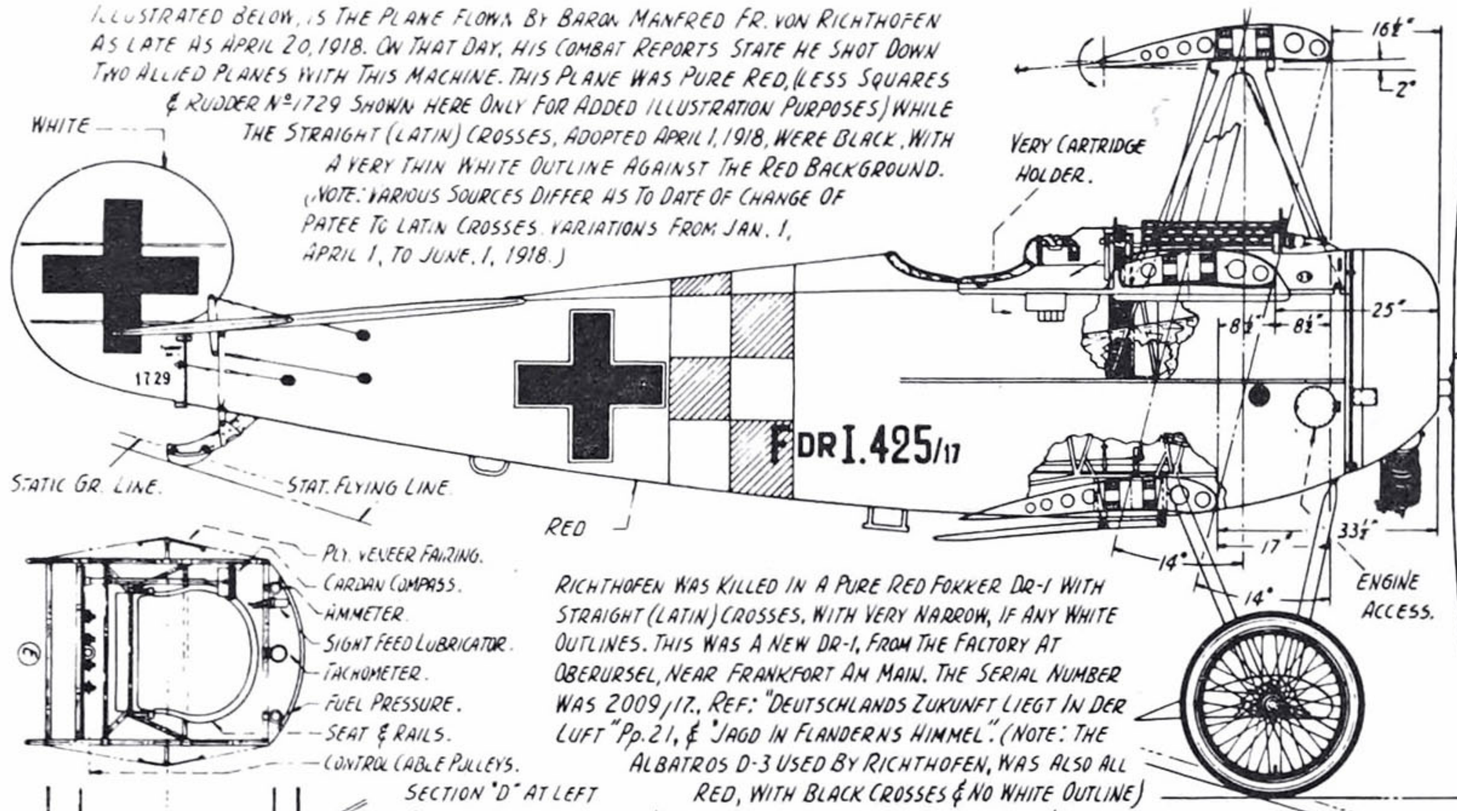

ANOTHER POPULAR, BUT ERRING BELIEF WAS THAT RICHTHOFEN MADE A NORMAL THREE-POINT LANDING WHEN SHOT DOWN BY A. ROY BROWN. RICHTHOFEN'S TRIPLANE, WAS ACTUALLY CRASHED. THE PLANE WAS DEMOLISHED BEYOND THE COCKPIT. THE SOUVENIR-MINDED AUSY SOLDIERS DID THE REST.

RICHTHOFEN WAS KILLED IN A PURE RED FOKKER DR-1 WITH STRAIGHT (LATIN) CROSSES, WITH VERY NARROW, IF ANY WHITE OUTLINES. THIS WAS A NEW DR-1, FROM THE FACTORY AT OBERURSEL, NEAR FRANKFORT AM MAIN. THE SERIAL NUMBER WAS 2009/17., REF: "DEUTSCHLANDS ZUKUNFT LIEGT IN DER LUFT" Pp. 21, & "JAGD IN FLANDERNS HIMMEL". (NOTE: THE ALBATROS D-3 USED BY RICHTHOFEN, WAS ALSO ALL RED, WITH BLACK CROSSES & NO WHITE OUTLINE)

OVERALL LENGTH. 19'-0"

SHOWN BELOW, IS THE FIRST FOKKER DR-1 TRIPLANE POSSESSED AND FLOWN IN COMBAT BY BARON MANFRED FREIHERR VON RICHTHOFEN, GERMANY'S GREATEST WORLD WAR I ACE, COMMANDER OF JAGOSTAFFEL 11, WITH 80 OFFICIAL AND 126 UNOFFICIAL VICTORIES TO HIS CREDIT BEFORE HE WAS SHOT DOWN NEAR SAILLY LE SEC, NORTH OF VAUX SUR SOMME, ON APRIL 21, 1918, BY CAPTAIN A. ROY BROWN, D.S.C, OF Nº 209 SQUADRON, ROYAL AIR FORCE.

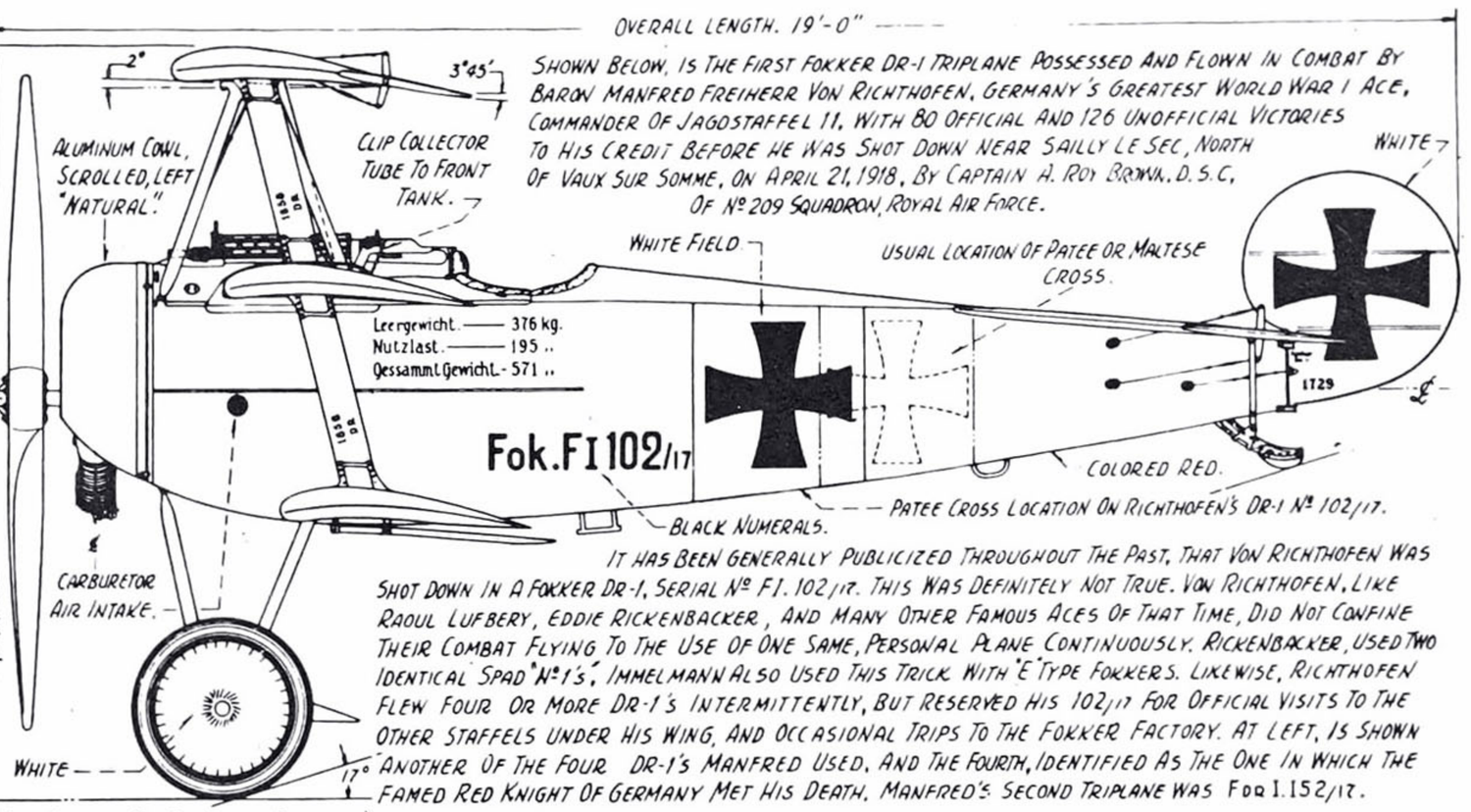

IT HAS BEEN GENERALLY PUBLICIZED THROUGHOUT THE PAST, THAT VON RICHTHOFEN WAS SHOT DOWN IN A FOKKER DR-1, SERIAL Nº F.I. 102/17. THIS WAS DEFINITELY NOT TRUE. VON RICHTHOFEN, LIKE RAOUL LUFBERY, EDDIE RICKENBACKER, AND MANY OTHER FAMOUS ACES OF THAT TIME, DID NOT CONFINE THEIR COMBAT FLYING TO THE USE OF ONE SAME, PERSONAL PLANE CONTINUOUSLY. RICKENBACKER, USED TWO IDENTICAL SPAD "Nº 1's", IMMELMANN ALSO USED THIS TRICK. WITH 'E' TYPE FOKKERS. LIKEWISE, RICHTHOFEN FLEW FOUR OR MORE DR-1's INTERMITTENTLY, BUT RESERVED HIS 102/17 FOR OFFICIAL VISITS TO THE OTHER STAFFELS UNDER HIS WING, AND OCCASIONAL TRIPS TO THE FOKKER FACTORY. AT LEFT, IS SHOWN ANOTHER OF THE FOUR DR-1's MANFRED USED, AND THE FOURTH, IDENTIFIED AS THE ONE IN WHICH THE FAMED RED KNIGHT OF GERMANY MET HIS DEATH. MANFRED'S SECOND TRIPLANE WAS Fok. I. 152/17.

(VON RICHTHOFEN ALSO TRIED OUT THE PFALZ DR. I TRIPLANE.)

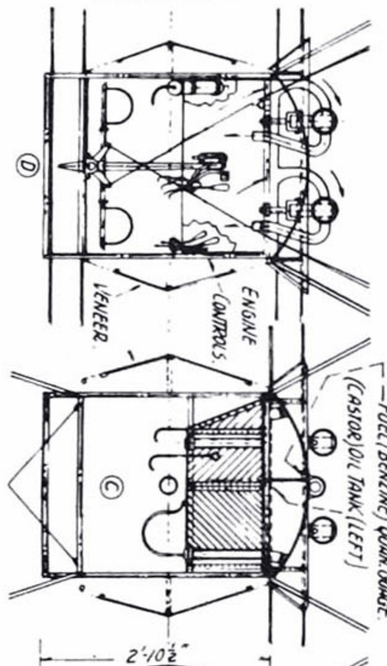

SECTION "D" AT LEFT SHOWS DIRECTION OF FEED & DISPOSAL OF SHELLS & CLIPS. USED SHELLS WERE DEFLECTED OUT RIGHT SIDE OF GUNS TO EARTH.

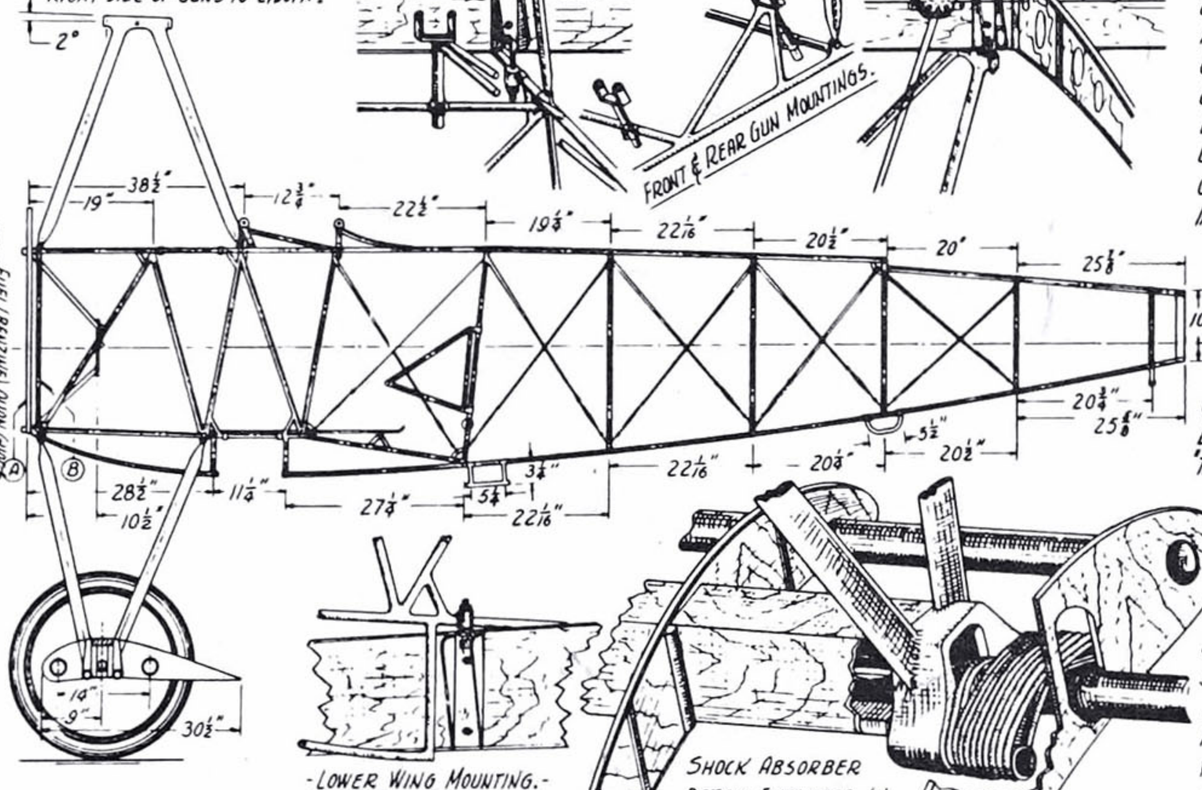

MACHINE GUN DETAILS ON MY FOKKER D-VII DRAWINGS ARE IN ERROR. CORRECT SYSTEM SHOWN HERE, FITS D-VII. LIVE AMMO ENTERS GUN FROM RIGHT SIDE & REAR TANK. CLIPS DISCHARGED THRU' TUBE AT LEFT, EACH GUN, TO FRONT TANK. USED SHELLS DISCHARGED OUT RIGHT OF GUNS INTO THE AIR.

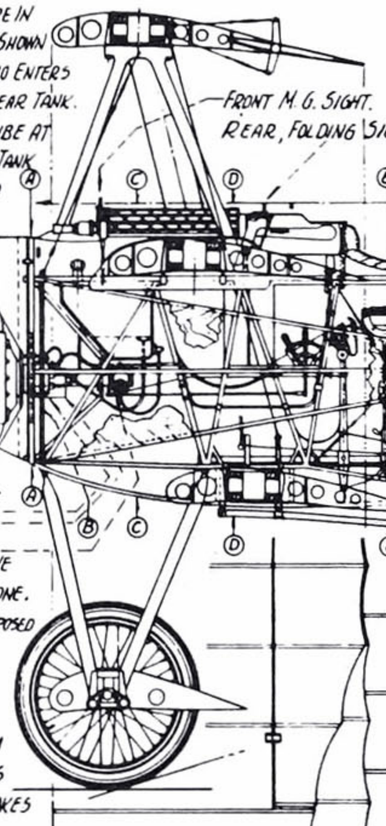

GENERAL DATA CHARACTERISTICAL DATA: WEIGHT EMPTY, 376 Kg. (829 LBS) USEFUL LOAD, 195 Kg. (430 LB.) TOTAL WEIGHT, 571 Kg. (1260 LB.) TOTAL SPANS, 23'7", 20'6", 18'9". O.A. LENGTH, 19'0" MAX. HEIGHT: 9'9½". CHORD OF MAIN PLANES, 3'3⅜". GAP BETWEEN PLANES AS SHOWN. ANGLE OF STAGGER OF ALL THREE PLANES, 14°0'. ANGLE OF INCIDENCE, UPPER, 2°@ C.C. 3°-95'@ AILERONS, MIDDLE & LOWER WINGS, 1°-30' INCIDENCE OF TAIL PLANE, 5° POS. TAIL PLANE SPAN, 9'-10". ENGINE, 110 HP. LE RHONE (FR.) OR OBERURSEL. (GER. COPY.) CONT.: LOWER LEFT.

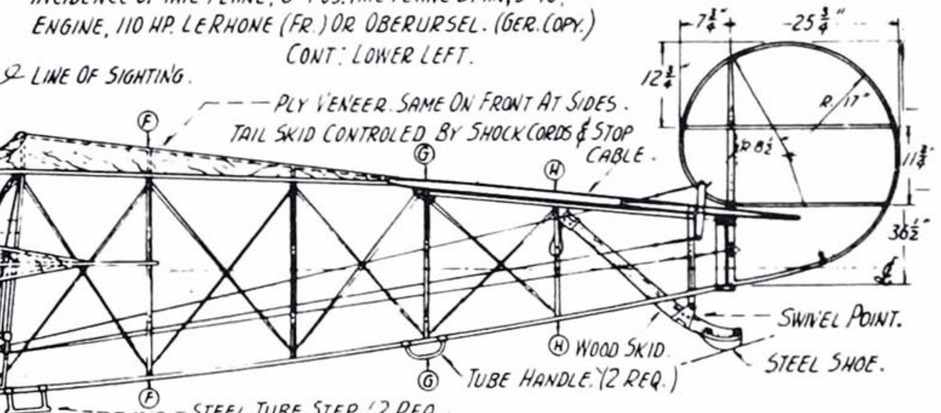

HATS OFF WITH THANKS TO: ROBERT E. ZOOK, PITTSBURGH, PA. AND TO CAPTAIN KIMBROUGH S. BROWN, U.S.A.F. SURREY, ENG., FOR ASSISTS ON THESE DRAWINGS. J.N.

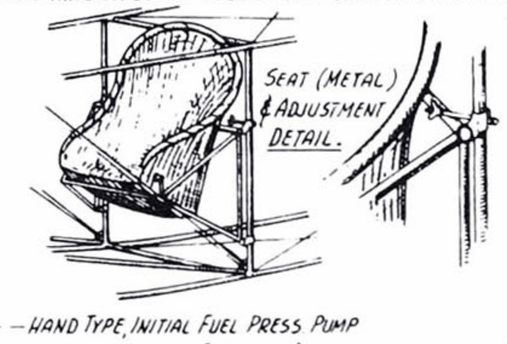

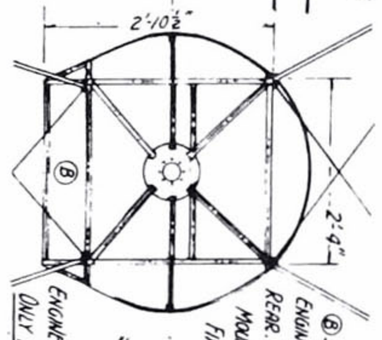

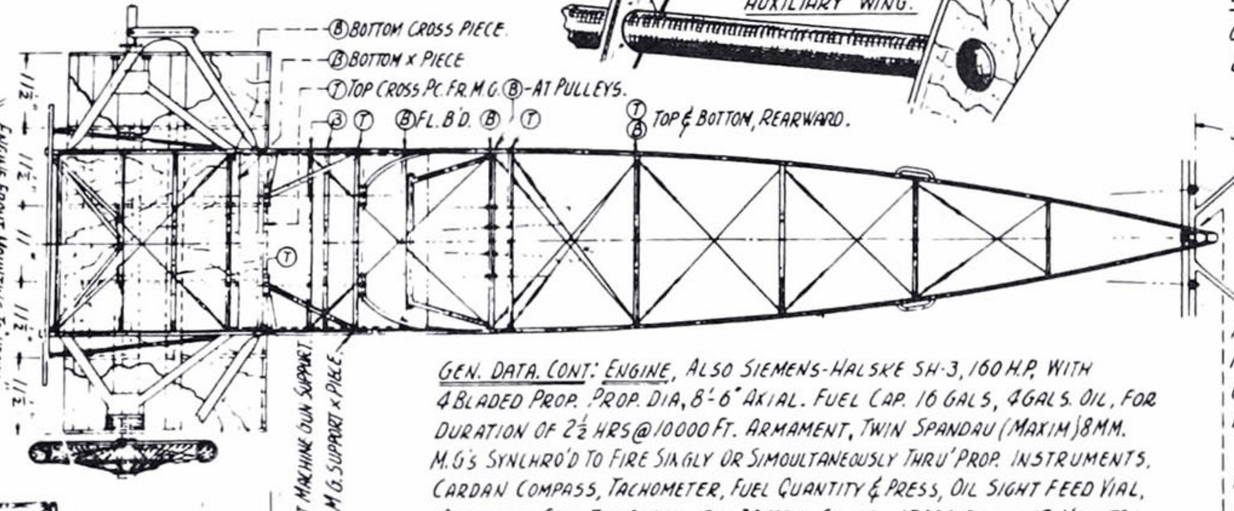

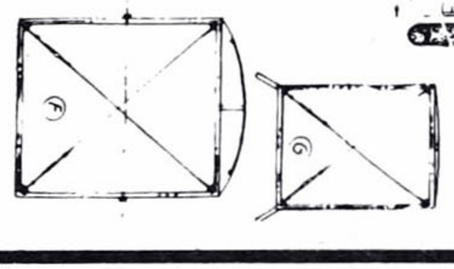

GEN. DATA. CONT: ENGINE, ALSO SIEMENS-HALSKE SH-3, 160 H.P. WITH 4 BLADED PROP. PROP. DIA, 8'-6" AXIAL. FUEL CAP. 16 GALS, 4 GALS. OIL, FOR DURATION OF 2½ HRS @ 10000 FT. ARMAMENT, TWIN SPANDAU (MAXIM) 8 MM. M.G.'S SYNCHRO'D TO FIRE SINGLY OR SIMOULTANEOUSLY THRU' PROP. INSTRUMENTS, CARDAN COMPASS, TACHOMETER, FUEL QUANTITY & PRESS, OIL SIGHT FEED VIAL, AMMETER, ETC. TOP SPEED, 120-30 MPH. CLIMB, 15000 FT. IN 17 MINUTES.

LOCATION OF STATIONS, BODY FORMERS, ENGINE MOUNT PLATE 'A' TO TAIL POST.

OUTER EDGE OF ENTIRE TAIL, SM.M. STEEL TUBE
STABILIZER FRAME TRIANGLE WAS 3 MM TUBE
STABILIZER RIBS, & ELEVATOR, BUILT UP OF 10 MM. TUBE.
AERODYNAMICALLY BALANCED ELEVATOR.

THANKS ALSO, TO DAVE WILLIAMS, IOWA CITY, IOWA, BERGEN HARDESTY, FRANKFORT, IND. FOR THEIR KIND COLLABORATION. J.N.

SEE DRAWINGS OF FOKKER D-VII. AUG. & SEPT. 1951, MODEL AIRPLANE NEWS FOR DETAILS VERY SIMILAR, USED ON DR-1, NOT SHOWN HERE

Fokker D.VII

drawings by JOSEPH NIETO

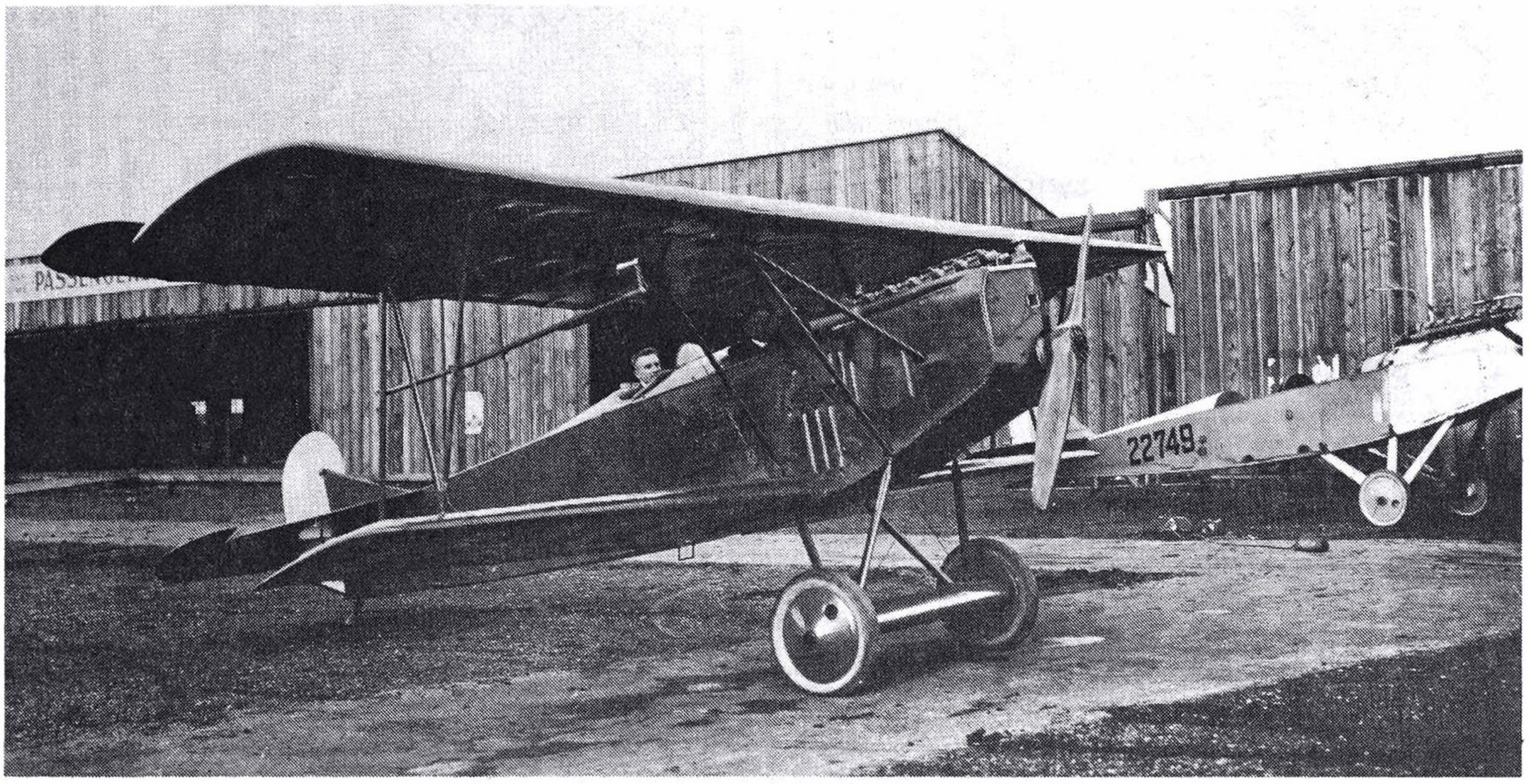

Probably the most famous of German WW I aircraft was the Fokker D.VII. Ernst Udet, shown below, was an advocate of the design, although he preferred the D.VIII. Air Age file photos.

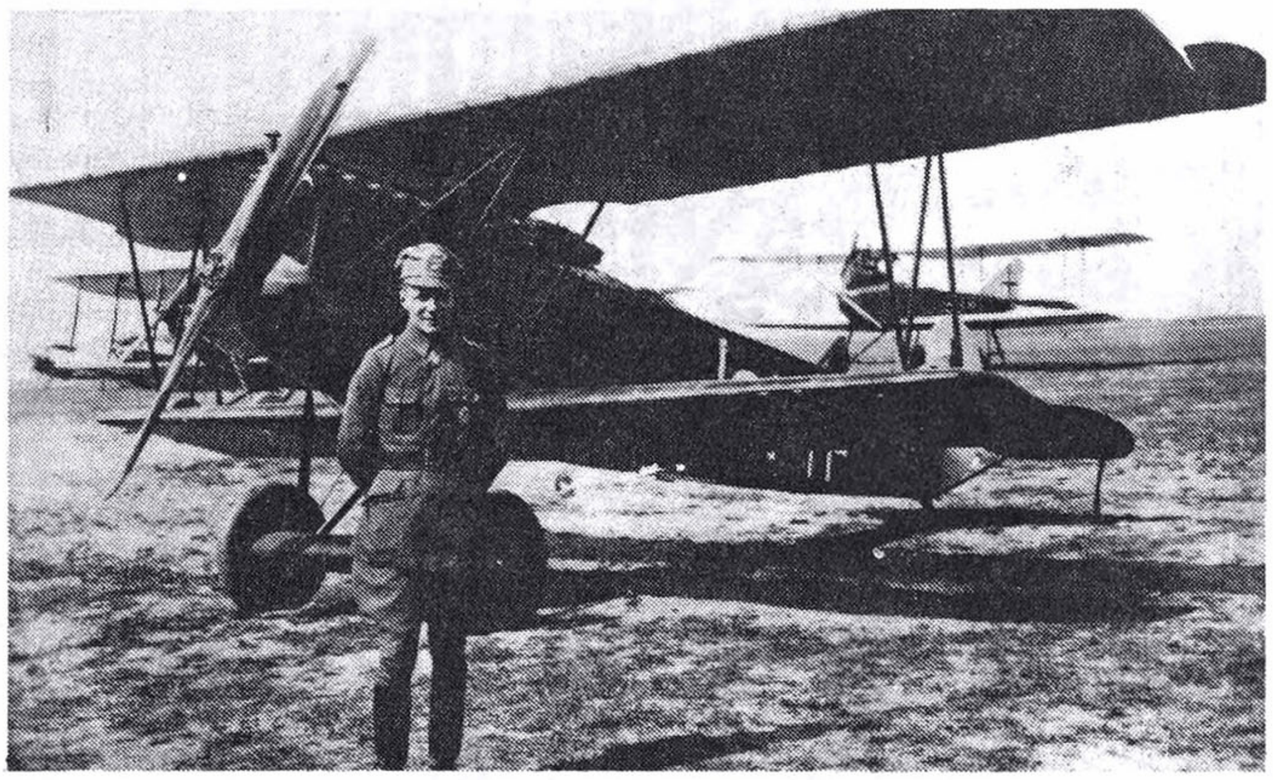

EARLY in May 1918, pilots assigned to the French sector began to meet increasing numbers of a strange new German pursuit plane. They observed it flying with squadrons of Albatros and Pfalz single-seaters, perhaps two or three to a flight. The new ships stayed pretty well back and very seldom engaged in a dog fight, but they impressed Allied pilots by their ability to bound around in the air like a rubber ball. This new plane, the D.VII, was the shot in the arm the Germans were looking for.

Among modelers and WW I aviation enthusiasts, the question always arises as to which was the best plane of that period. The Fokker D.VII certainly will have its supporters in any such discussion. Simplicity was the keynote of the design. The fuselage was of wire-braced welded steel tubing (the Germans did not trust welds in tension); the tail was all-steel. The wings were each built on two massive wooden box-spars, and there was no wire rigging. Most examples of the aircraft were powered by the Mercedes D.III engine, rated at 160 hp; however, later models were fitted with Daimler and B.M.W. engines for high altitude.

Two Spandau machine guns were mounted directly in front of the pilot, and the combination of pilot, machine, and firepower added up to a formidable weapon for the Germans. From a historical standpoint, the Fokker D.VII will always hold a special significance as one of the most interesting airplanes ever built: it was the only German airplane by name to be mentioned in the Treaty of Versailles.

Seven original D.VIIs are in museums all over the world. □

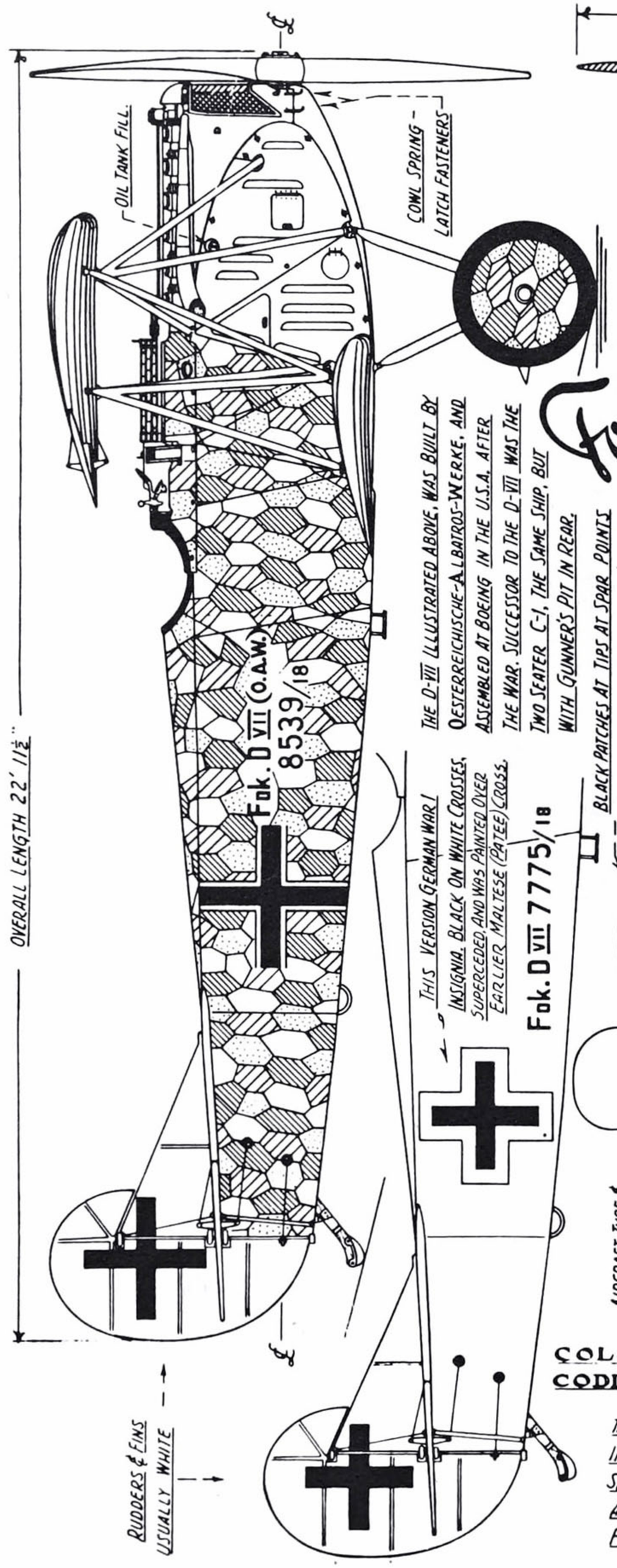

Fokker

THE D-VII ILLUSTRATED ABOVE, WAS BUILT BY OESTERREICHISCHE-ALBATROS-WERKE, AND ASSEMBLED AT BOEING IN THE U.S.A. AFTER THE WAR. SUCCESSOR TO THE D-VII WAS THE TWO SEATER C-1, THE SAME SHIP, BUT WITH GUNNER'S PIT IN REAR.

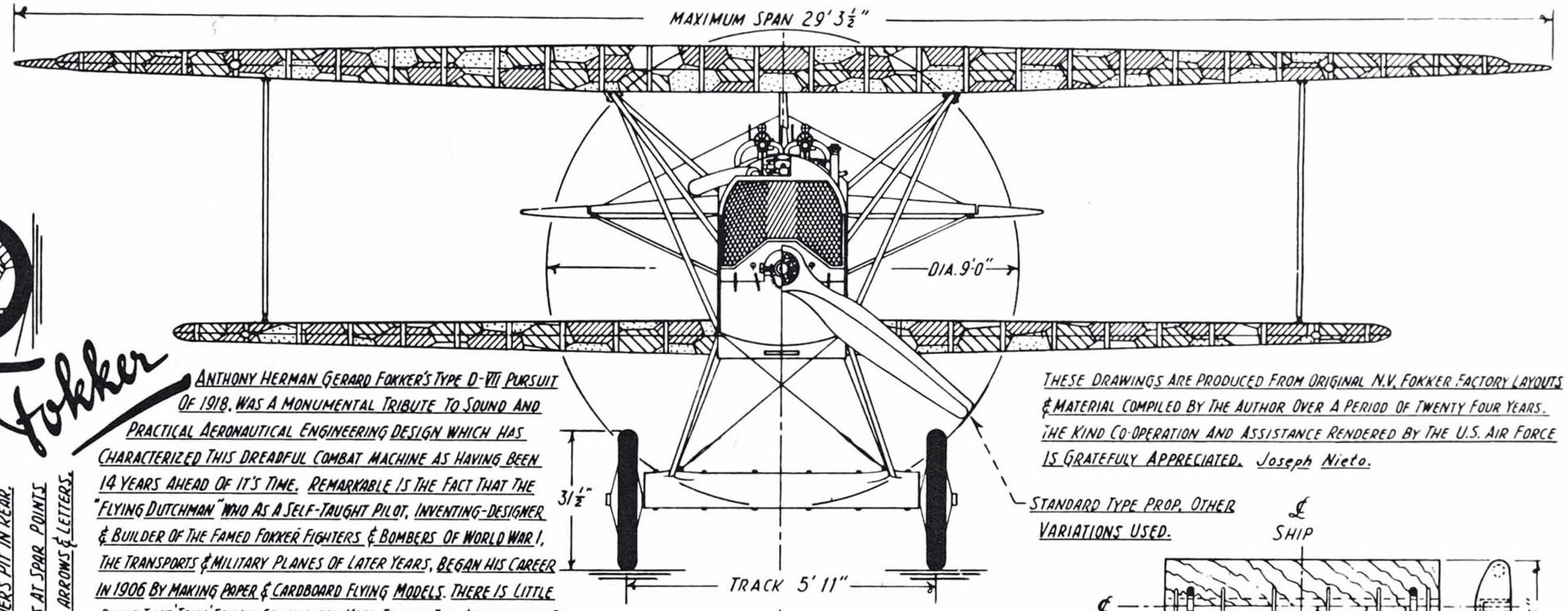

ANTHONY HERMAN GERARD FOKKER'S TYPE D-VII PURSUIT OF 1918, WAS A MONUMENTAL TRIBUTE TO SOUND AND PRACTICAL AERONAUTICAL ENGINEERING DESIGN WHICH HAS CHARACTERIZED THIS DREADFUL COMBAT MACHINE AS HAVING BEEN 14 YEARS AHEAD OF IT'S TIME. REMARKABLE IS THE FACT THAT THE "FLYING DUTCHMAN" WHO AS A SELF-TAUGHT PILOT, INVENTING-DESIGNER & BUILDER OF THE FAMED FOKKER FIGHTERS & BOMBERS OF WORLD WAR I, THE TRANSPORTS & MILITARY PLANES OF LATER YEARS, BEGAN HIS CAREER IN 1906 BY MAKING PAPER & CARDBOARD FLYING MODELS. THERE IS LITTLE DOUBT THAT 'TONY' FOKKER CONTRIBUTED MORE TOWARD THE ADVANCEMENT OF THE AIRPLANE THAN ANY OTHER DESIGNER OF HIS TIME, ALBEIT THE ABILITY & PROMOTIONAL TACTICS HE EMPLOYED AS A SALESMAN ARE AS PROMINENTLY RECORDED IN THE ANNALS OF AVIATION HISTORY. NAMES OF WORLD WAR I & 2 GERMAN AIR SERVICE PILOTS BECAME OF FAME WITH THE FOKKER. RICHTHOFEN, UDET, GOERING, BOELCKE, IMMELMANN, VOSS & MANY OTHERS, EVEN FOKKER ---
(CONT. BELOW)

THESE DRAWINGS ARE PRODUCED FROM ORIGINAL N.V. FOKKER FACTORY LAYOUTS & MATERIAL COMPILED BY THE AUTHOR OVER A PERIOD OF TWENTY FOUR YEARS. THE KIND CO-OPERATION AND ASSISTANCE RENDERED BY THE U.S. AIR FORCE IS GRATEFULY APPRECIATED. Joseph Nieto.

STANDARD TYPE PROP. OTHER VARIATIONS USED.

PLAN & END VIEWS OF AUXILIARY PLANE SUPPOSED TO COMPENSATE AERODYNAMICALLY, THE WEIGHT OF GEAR.

THANKS TO PETER M. BOWERS FOR DATA ON AUTHENTIC CROSS INSIGNIA.

SURFACE TAPE WAS LIGHT BLUE

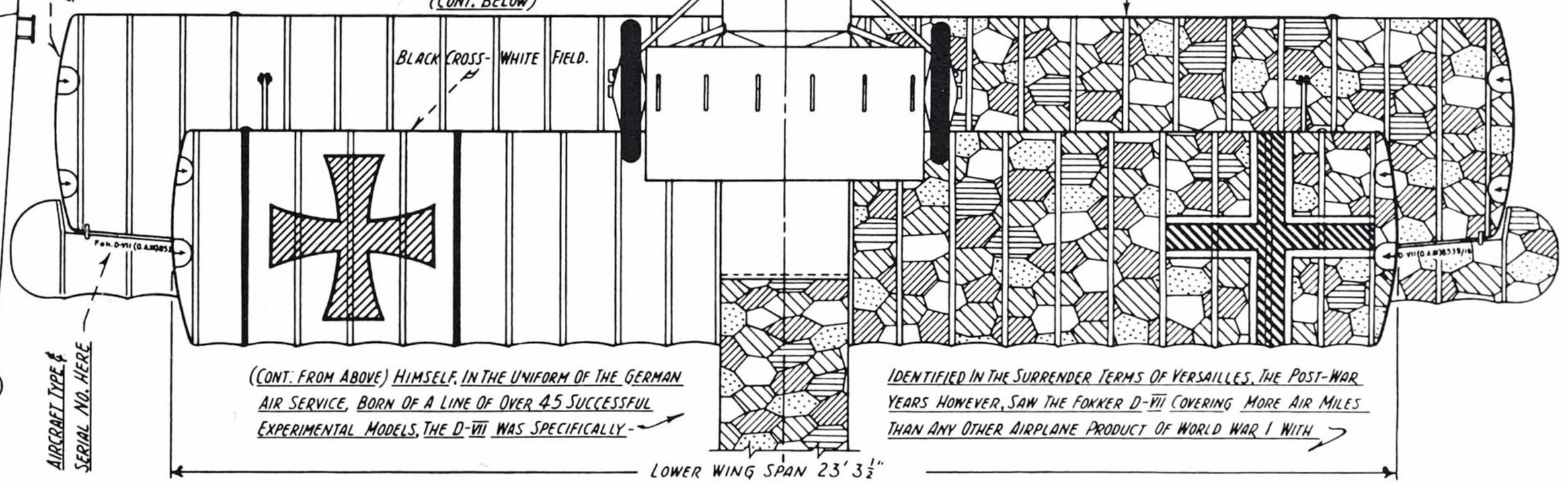

(CONT. FROM ABOVE) HIMSELF, IN THE UNIFORM OF THE GERMAN AIR SERVICE, BORN OF A LINE OF OVER 45 SUCCESSFUL EXPERIMENTAL MODELS, THE D-VII WAS SPECIFICALLY-

IDENTIFIED IN THE SURRENDER TERMS OF VERSAILLES. THE POST-WAR YEARS HOWEVER, SAW THE FOKKER D-VII COVERING MORE AIR MILES THAN ANY OTHER AIRPLANE PRODUCT OF WORLD WAR I WITH

COLOR CODING — DARK GREEN. LIGHT GREEN. MAUVE. PINK. ROSE BEIGE OR FAWN.

THE MILITARY AIR SERVICES OF POLAND, RUSSIA, RUMANIA, THE DUTCH, AND MANY OTHERS, NOT ONLY AS A SINGLE SEAT FIGHTER, BUT ALSO AS AN IDEAL WEATHER SHIP IN METEOROLOGICAL SERVICE, AS LATE AS 1933-34. (WITH OR WITHOUT SNOW SKIIS, THE D-VII COULD CLIMB TO 23000 FEET AND EASILY WITHSTOOD STRUCTURAL STRAIN OF TEMPERATURE CHANGES UP TO 50°C.) FOKKERS WERE FIRST BUILT AT "FOKKER FLUGZEUGWERKE", SCHWERIN-GORRIES, MECKLENBURG, THEN AT JOHANNISTHAL AERODROME, BERLIN, (FOKKER AEROPLANBAU, G.m.b.H.) AND LATER IN AMSTERDAM, HOLLAND, (N.V. NEDERLANDSCHE VLIEGTUIGEN-FABRIEK, ROKIN, 84.) ALSO BUILT BY AUSTRIAN BRANCH, ALBATROS WORKS, O.A.W. (OESTERREICHISCHE-ALBATROS-WERKE, G.m.b.H.) VIENNA.

AIR AGE INC 551 FIFTH AVE, NEW YORK, 17, N.Y		
SCALE: ¼" 1-0"	GENERAL ARRANGEMENTS 1918 GERMAN PURSUIT KAMPF-DOPPELDECKER	Fok. D VII
FULL SIZE: ¾" 1-0"		
COPYRIGHT BY Joseph Nieto.		

THE VERSATILE FLEXIBILITY OF THE FOKKER D-VII WAS SUCH THAT IT WAS NOT RESTRICTED TO THE USE OF ANY PARTICULAR TYPE OF ENGINE. ORIGINALLY, THE D-VII WAS POWERED WITH THE B.M.W. IIIA ENGINE OF 185/200 H.P. ALTHOUGH THE 160 AND 180 H.P. MERCEDES WERE STANDARD EQUIPMENT, D-VII's PERFORMED ADMIRABLY WITH SUCH VARIATIONS AS THE 110 H.P. HALL-SCOTT A7-A, THE 225 H.P. 12 CYL. PACKARD 1237, AND THE BRITISH 230 H.P. SIDDELEY "PUMA". THE DEGREE OF INCIDENCE WAS ADJUSTABLE AND DEPENDED ON TYPE OF ENGINE USED. (WITH THE 180 H.P. MERCEDES, INCIDENCE WAS 0°) FOLLOWING IS A CONCISE SUMMARY OF RESULTS DETERMINED AT WRIGHT FIELD WITH THE 180 H.P. MERCEDES-POWERED D-VII (COURTESY, ARMY AIR FORCE)

-ALTITUDE (FT.)-	-SPEED-	-TIME-
3,281	116.6	4'15"
6,562	114.1	8'18"
9,843	109.7	13'49"
13,124	103.5	22'48"
18,405	94.9	38'5"

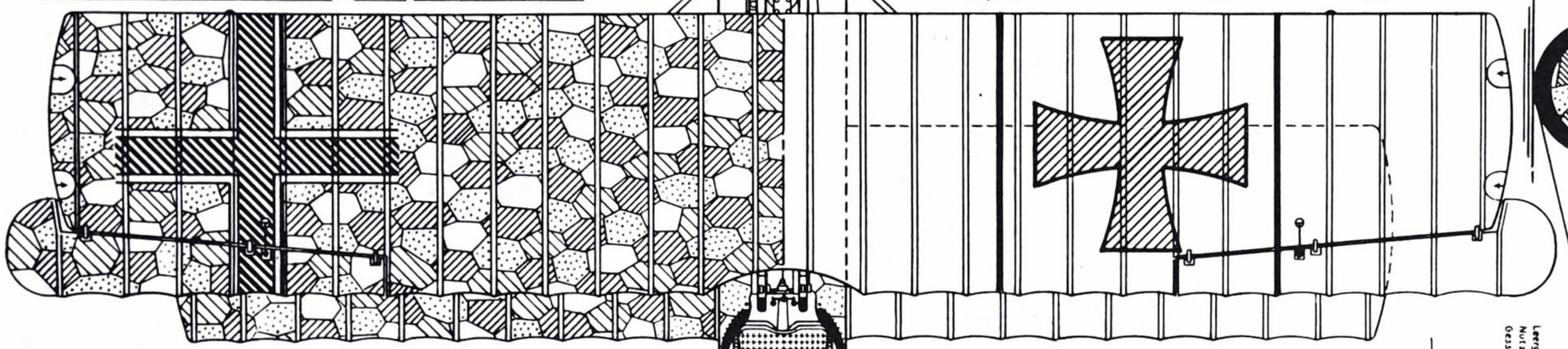

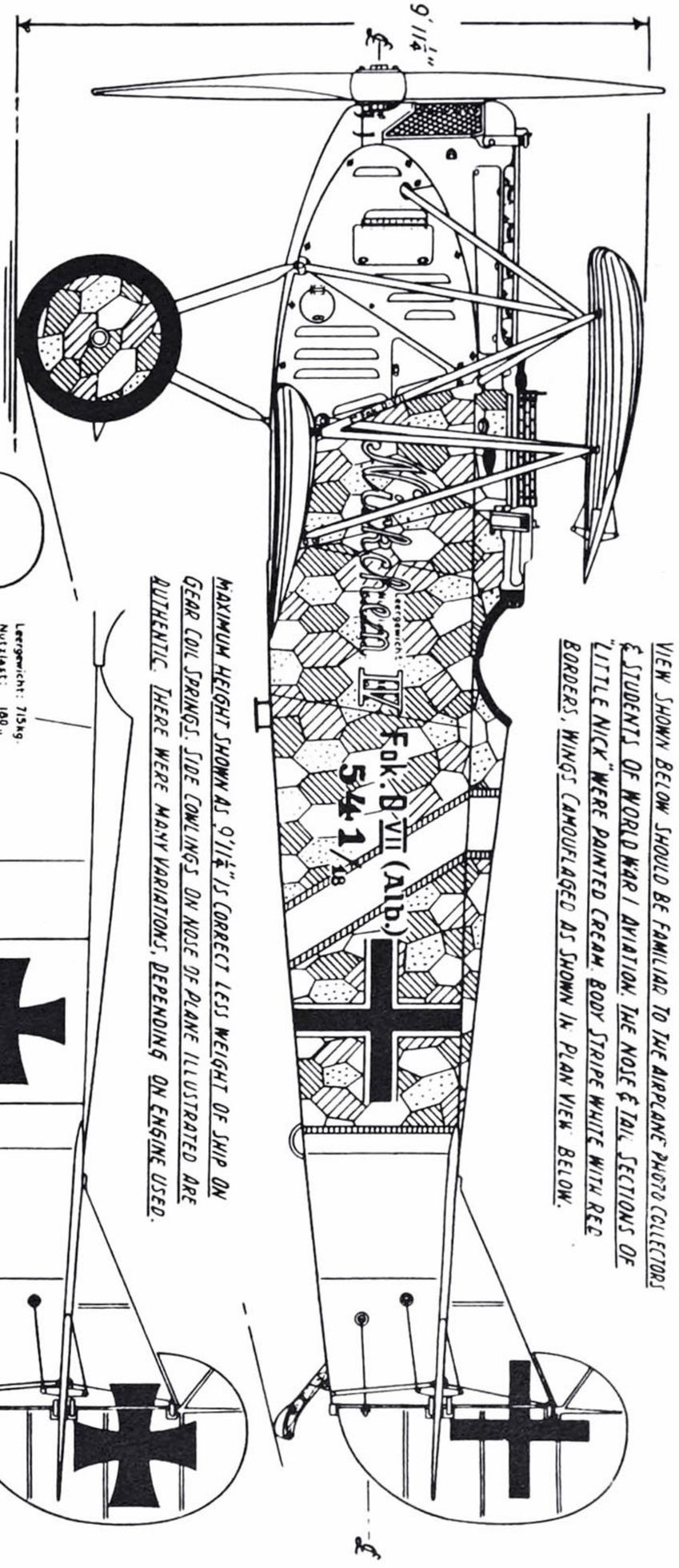

VIEW SHOWN BELOW SHOULD BE FAMILIAR TO THE AIRPLANE PHOTO COLLECTORS & STUDENTS OF WORLD WAR I AVIATION. THE NOSE & TAIL SECTIONS OF "LITTLE NICK" WERE PAINTED CREAM BODY STRIPE WHITE WITH RED BORDERS, WINGS CAMOUFLAGED AS SHOWN IN PLAN VIEW BELOW.

MAXIMUM HEIGHT SHOWN AS 9'11¼" IS CORRECT LESS WEIGHT OF SHIP ON GEAR COIL SPRINGS. SIDE COWLINGS ON NOSE OF PLANE ILLUSTRATED ARE AUTHENTIC. THERE WERE MANY VARIATIONS, DEPENDING ON ENGINE USED.

GENERALLY, THE FOKKER D-VII WAS DECORATED WITH ALL THE COLORS SUITED TO FANCIFUL TASTE. SHOWN IN PART IS THE CHARACTERISTIC STYLE OF GERMAN CAMOUFLAGE WITH COLOR CODE ON OPPOSITE PAGE. ONE CAPTURED D-VII WAS PAINTED FROM THE NOSE TO PILOT'S SEAT IN BRIGHT RED. FROM THAT POINT TO THE TAIL, WHITE. THE UPPER WING TOP SURFACE, CABANE, UNDERCARRIAGE & 'N' STRUTS, RED. WHILE BOTTOM OF UPPER WING & ENTIRE LOWER WING CAMOUFLAGED WITH VARIOUS DULL COLORS. MALTESE CROSS (ABOVE) ON WHITE FIELD.

VIEW SHOWING COCKPIT, GUNS, ENGINE.

FOR THE "SUPER-DETAIL" MODELER. REFERENCE IS MADE TO BILL WYLAM'S SUPERB DRAWINGS OF THE MERCEDES IN THIS SCALE, JULY & AUGUST 1948 OF MODEL AIRPLANE NEWS.

M.G. CARTRIDGE BELT FEED CHUTE INJECTED GUNS FROM THE RIGHT.

PLAN VIEW SHOWING NOSE COWLS. FLIGHT SURFACES OF ALL D-VII's WERE IDENTIFIED WITH AIRCRAFT SERIAL NUMBER AT LEADING AND TRAILING EDGES. 'N' STRUTS LIKEWISE MARKED. FABRIC OF FUSELAGE AT POINTS SHOWN WAS FASTENED IN EYELETS AT CORNERS FOR ACCESS TO STAB. MOUNTINGS.

BOTTOM VIEW OF D-VII NOSE COWLS, SOME USED

FUEL SERVICE ACCESS

Fok.D VII 1075/18

Langwerdt: 715kg
Nutzlast: 180..
Gesamtgew: 895..

LOWER END OF REAR WING STRUT. THE UPPER REAR & LOWER FRONT 'N' STRUT ENDS ATTACHED TO WING SPAR FITTINGS BY ADJUSTABLE BALL-SOCKET THREADED "EYE BOLTS" WHICH PROVIDED MEANS TO ADJUST ANGLE OF INCIDENCE. SEVERAL VARIATIONS OF ENGINE EXHAUST STACKS WERE USED. SHOWN IS THE TYPE MOST CONVENTIONAL WITH 180 H.P. MERCEDES.

SPANDAU GUN DRAWINGS FROM 'LIFE.' ABOVE VIEW OF PYRAMIDAL WING STRUTS ARE SHOWN IN READY POSITION FOR INSTALLATION OF UPPER WING. THE

DIMENSIONS:

WINGSPAN, UPPER PLANE.	29' 3½"
" " LOWER "	23' 3½"
CHORD, UPPER PLANE.	5' 3"
" LOWER "	4' 0"
OVERALL LENGTH.	22' 11½"
GAP BETWEEN PLANES (AT BODY SIDE).	4' 3¼"

AREAS:

140.7 SQ. FT.	UPPER PLANE INCLUDING AILERONS.
78.3 " "	LOWER PLANE.
11.4 " "	AILERONS (TOTAL OF TWO).
.5 " "	BALANCED PART OF AILERONS.
21.1 " "	STABILIZER.
15.2 " "	ELEVATORS (TOTAL OF TWO).
1.1 SQ. FT.	BALANCED PART OF ELEVATORS.
2.8 " "	VERTICAL FIN.
5.9 " "	RUDDER.
35.6 " "	HORIZONTAL AREA OF BODY.
58.6 " "	VERTICAL " " "
12.4 " "	PLANE BETWEEN WHEELS.

WEIGHTS:

FUSELAGE (COMPLETE WITH ENGINE, ETC.)	1,322.2 LBS.
UPPER WING, WITH AILERONS.	167.2 "
LOWER WING.	99.0 "
TAIL SURFACES (COMPLETE).	34.1 "
TOTAL WEIGHT (EMPTY).	1,622.5 "
USEFUL LOAD (APPROXIMATELY)	395.0 "

THE THIN, STRAIGHT, BLACK CROSS INSIGNIA AS SHOWN IN SIDE VIEW DIRECTLY ABOVE, WAS THE LATEST TYPE USED BY GERMANY IN 1918. NARROW WHITE BORDER TRIM.

Fok. D VII

AIR AGE INC. 551 FIFTH AVE. NEW YORK, 17. N.Y.

SCALE: ¼" = 1'-0"

FULL SIZE ¾" = 1'-0"

AIRFRAME CONSTRUCTION & GENERAL DETAILS. 1918 GERMAN PURSUIT, TYPE

COPYRIGHT BY Joseph Nieto.

STIRNKUHLER (RADIATOR)
RADIATOR FILL PIPE
SPANNTURM (WING SUPPORT STRUTS)
VERGASER (CARB.)
OBERER FLUGEL (UPPER WING)
QUERRUDDER (AILERON)
AILERON CONTROL CABLES BRANCHED FROM BODY IN PAIRS.
EMPTY M.G. BELT CHUTE (LEFT) TO TANK (PATRONENKASTEN) LIVE AMMO, FROM RIGHT.
PATRONENKASTEN (LIVE M.G. AMMO SUPPLY TANK.)
SCHALTBRETT (INSTRUMENT PANEL) STARTING MAGNETO SHOWN.
STEUERGRIFF (FLIGHT CONTROL GRIP.)
AUXILIARY THROTTLE CONTROL CONNECTED TO MAIN BY BOWDEN CABLES.
MAIN THROTTLE ADJUSTABLE AT CONN. TO ROD. (VERGASERHEBEL.)
AUTOLOCHEBEL (MAGNETO ADVANCE & RET. CONTROL)
RUCKENFLOSSE (V. FIN)
SEITENRUDER (RUDDER)
HOHENFLOSSE (HOR. STAB.)
HOHENRUDER (ELEVATOR)
STREBE FUR HOHENFLOSSE (STAB. STRUT.)
SCHWANZKUFE (SKID)
SITZBEFESTIGUNG (SEAT MOUNTING.)
SITZ (SEAT) ADJUSTABLE. (FIG. 5.)
KOMPAS (MAGNETIC COMPASS)
FUSSBODEN (FLOORBOARD) PLY.
LUFTPUMPE (HAND PUMP FOR INITIAL AIR PRESSURE.)
STEUERKNUPPEL (FLIGHT CONTROL COLUMN.)
STEUGWELTE. (AILERON BAR.)
BENZINE & OIL TANKS. (21 GALS. & 4½ GALS.)
FAHRGESTELL (LANDING GEAR)
FAHRGESTELLFLACHE (L. GEAR WING.)
LAUFRAD (TIRE)
AUFSTIEG (MOUNTING STEP)
ZUNDGESKTANGE (MAG.) CONTROL LINKAGE.)
ZEITENRUDER FUSHEBEL (RUDDER PEDAL.)
PATRONEN LEER GURTKASTEN. (STORAGE TANK FOR SPENT SHELLS)
AILERON CONTROL CABLES (CROSSED ABOVE HORNS.)
TUBE FOR FUEL GAUGE. (BETWEEN GUNS.) BENZINUHR.
UNTERER FLUGEL (LOWER WING)

FIGURE ① STRUTS A-B-C, WELDED JOINTS. STRUT D, REMOVABLE. (REF. FIGS. 3 & 4.)

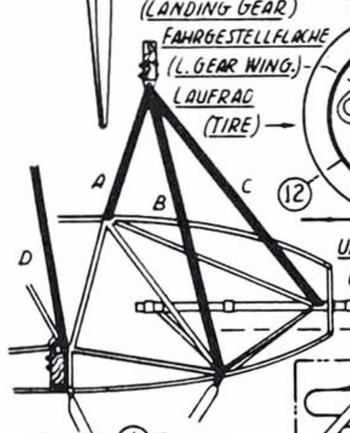

ENGINE BEARERS WERE 14 GAUGE 34MM DIA. STEEL TUBES WELDED TO FUSELAGE FRAME.

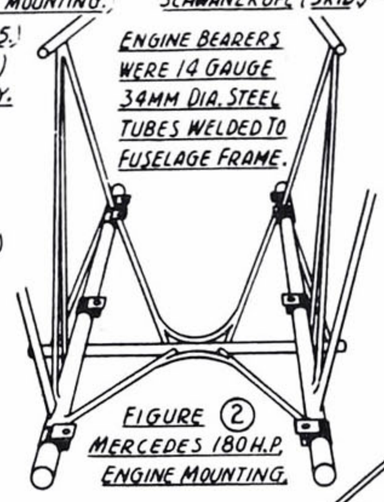

FIGURE ② MERCEDES 180 H.P. ENGINE MOUNTING.

FIGURE ⑧ TAIL SKID.

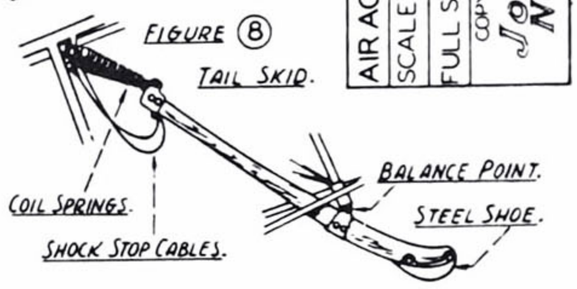

M.G. SYNCHRONIZER OP. BY CAMSHAFT INDIVIDUAL CABLES TO EACH GUN.
FUEL GAUGE LOCATED BETWEEN M.G's.
HAND OPERATED AIR PUMP TO FUEL TANKS.
MAGNETIC NAVIGATION COMPASS.
CHRONOMETRIC TACHOMETER.
FLIGHT CONTROL GRIP.
CONTROL CABLES DOUBLED.
THREE-PLY FAIRING COVERED BY PRINTED FLAX FABRIC. (REF. FIG. 6)

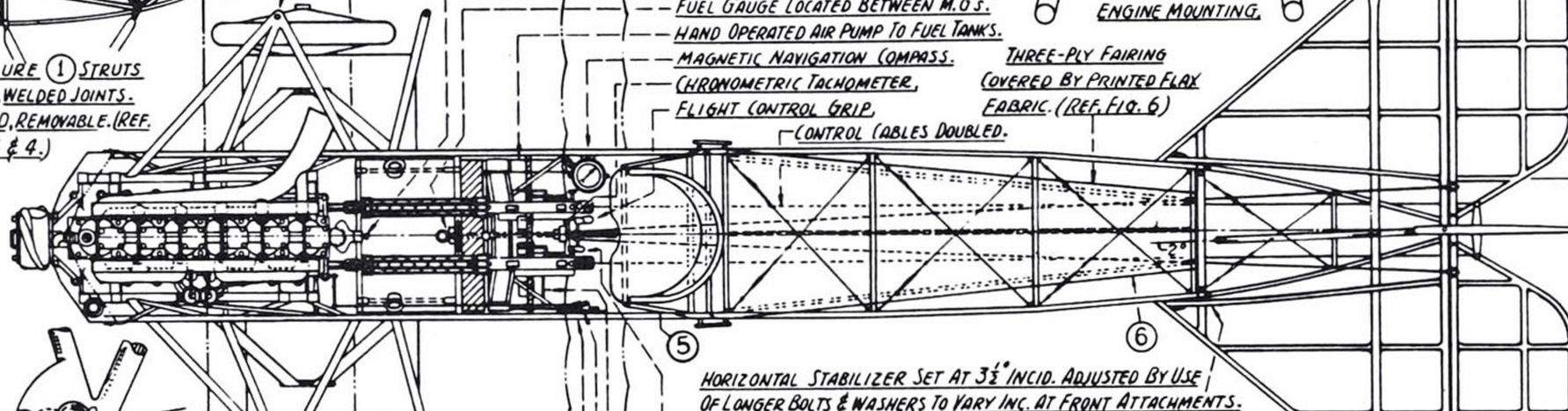

HORIZONTAL STABILIZER SET AT 3½° INCID. ADJUSTED BY USE OF LONGER BOLTS & WASHERS TO VARY INC. AT FRONT ATTACHMENTS.

VERTICAL FIN WAS SET AT 2° ANGLE TO PORT OF SHIP CENTER LINE.

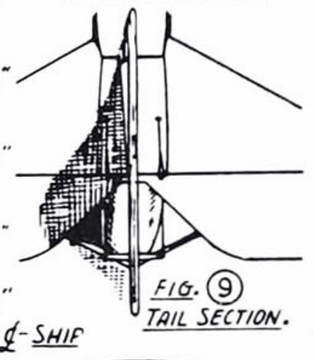

FIG. ⑨ TAIL SECTION.

AUX. THROTTLE CONTROL.
STARTING MAGNETO.
ENG. DRIV. MAG. CONTR.
MAIN THROTTLE. (REF. FIG. 14.)

4TH. RIB FROM BODY (REF.)
4TH. RIB FROM ℄ SHIP. (REF.)

MAXIM "SPANDAU" 8MM. M.G's (08/15 TYPE) WERE FIRED BY EITHER OR BOTH TRIGGER-LEVERS (ON CONTROL STICK) ACTUATING M.G. INTERRUPTORS.

FIGURE ③ LOWER WING SPAR ATTACHMENT TO FUSELAGE FRAME. (SEE FIG. 4 ALSO)

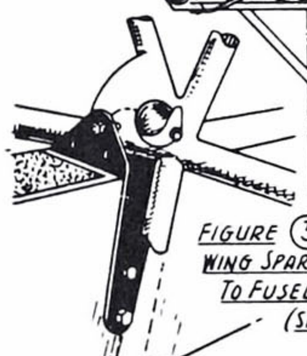

FIG ⑤ ALUM. BUCKET SEAT & ADJUST. MOUNTING DETAIL.

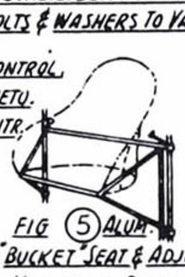

FIG. ⑥ FAIRING DETAIL OF FUSELAGE TOP.

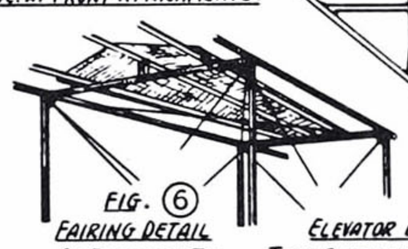

ELEVATOR LEADING EDGE STEEL TUBE, FLATTENED & WELDED AT TIP.

VERTICAL STAB. 2° - PORT INCID. AGAINST TORQUE.

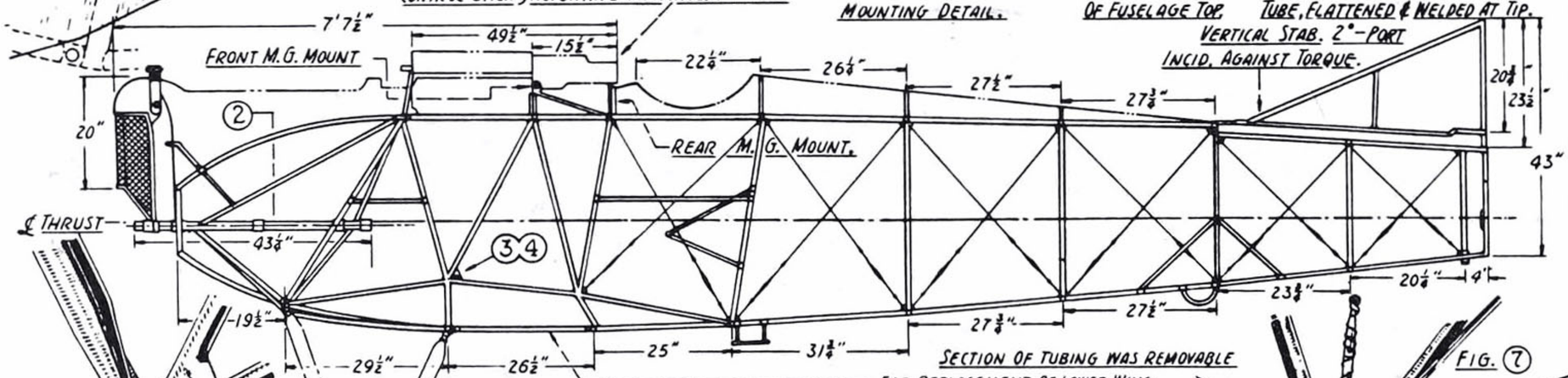

SECTION OF TUBING WAS REMOVABLE FOR REPLACEMENT OF LOWER WING.

FIG. ④ REAR WING STRUT ATTACHMENT.

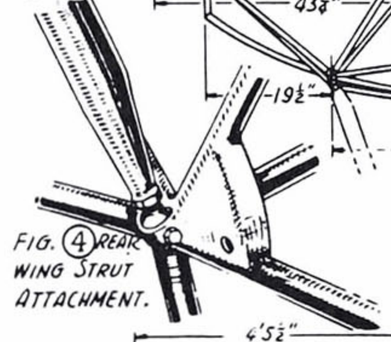

FIG. ⑦

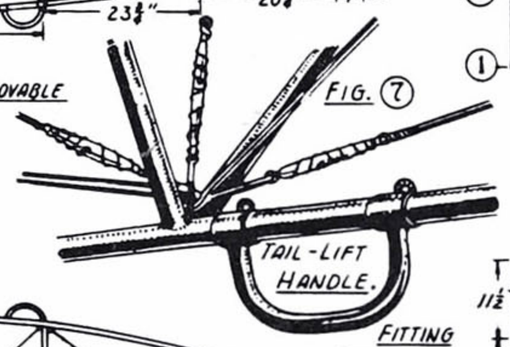

THE FABRIC OF THE D-VII FUSELAGE WAS COARSE FLAX AND PRINTED (PROBABLY BY MACHINE) WITH THE USUAL IRREGULAR VARI-COLORED POLYGONS OF CAMOUFLAGE. THE FABRIC WAS NOT ATTACHED TO THE FUSELAGE LONGERONS BUT WAS SIMPLY CARRIED OVER THE FRAMEWORK AND LACED UNDERNEATH ALONG THE CENTER LINE. A CROSS PIECE WAS LACED ACROSS & BEHIND COCKPIT.

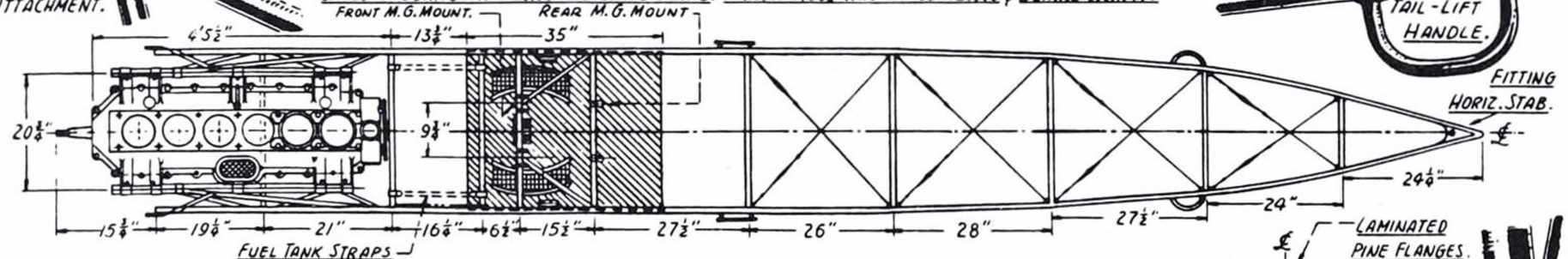

PLAN VIEW ABOVE PRESENTS D-VII FUSELAGE TOP-SIDE LONGITUDINALS AND CROSSMEMBERS & RIGGING OF SAME. PLYWOOD VENEER FLOORBOARD, (SHADED AREA) FRONT & REAR M.G. MOUNTS & MERCEDES 180 H.P. F-1466D-3A ENGINE BASE MOUNTED IN NOSE SECTION. REAR ATTACHMENT FOR HORIZONTAL STAB. AT REAR TIP.

SECTIONS OF FRONT, REAR L.W. SPARS AT BODY SIDES. FLANGES TOP & BELOW OF SCOTS PINE. BIRCH WEBS.



LAMINATED PINE FLANGES. BIRCH WEB.

SCALE: 1½" = 1'-0"

VIEW ABOVE PRESENTS FUSELAGE BOTTOM-SIDE LONGITUDINALS, CROSSMEMBERS & RIGGING. BETWEEN A & B, TUBING WAS REMOVABLE ALLOWING PASSAGE OF LOWER WING SPARS UPON INITIAL INSTALLATION OR REPLACEMENT. TUBING WAS THEN REPLACED AND ALUMINUM COWL-PLATE FASTENED. COWLING WAS ALUMINUM, COVERING FUSELAGE ON ALL FOUR SIDES, ABOVE, TO COCKPIT, BELOW, BEYOND MAIN SPARS COWLS FASTENED BY NUTS & BOLTS. NUTS HAD 1" HANDLES PROVIDING RAPID REMOVAL WITHOUT TOOLS.

L.W. SPAR SECTIONS AT THE TIPS. SCALE: 1½" = 1'-0"



FIG. ⑩ BALL-SOCKET JOINT "N" STRUT FITTING TO FRONT L.W. MAIN SPAR.

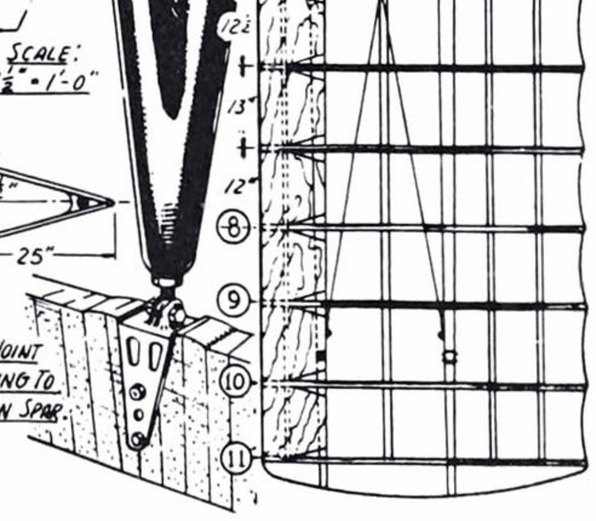

PLYWOOD VENEER

LOWER WING PLAN. ASSEMBLED TO FUSELAGE IN ONE PIECE.

RADIATOR FACE — FUSELAGE SECTIONS LEGEND — A B C D E

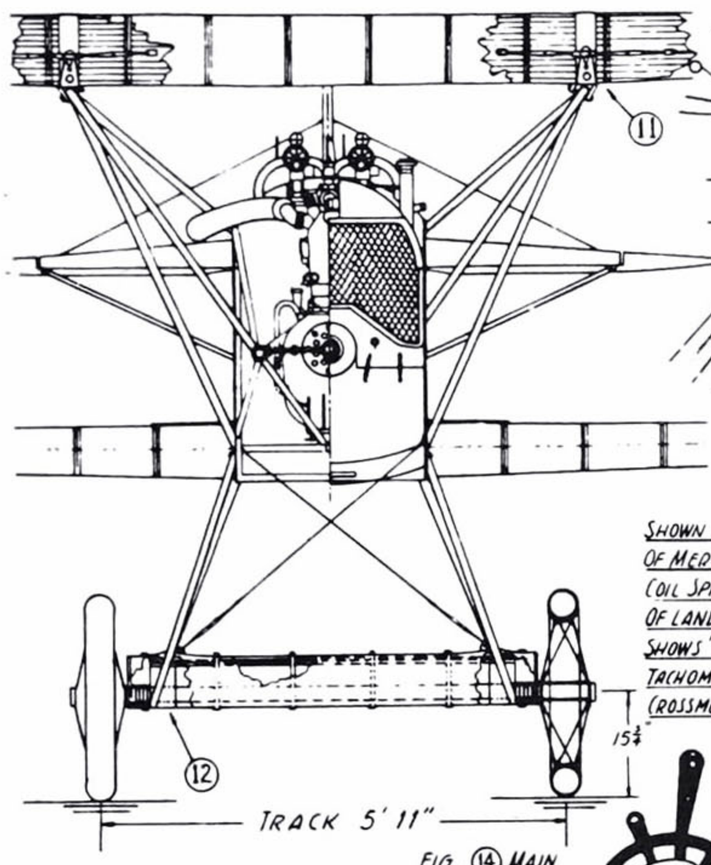

A TO B

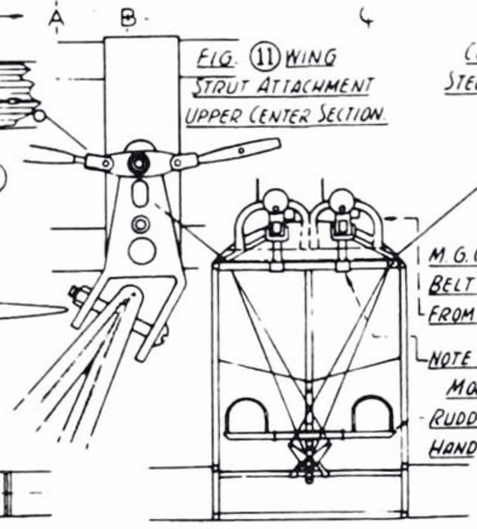

B TO C

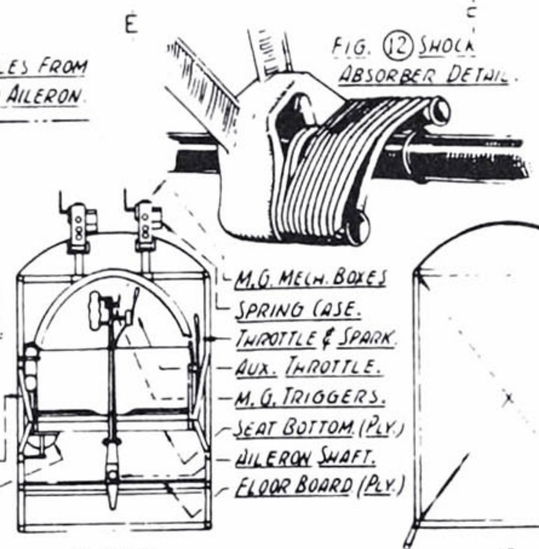

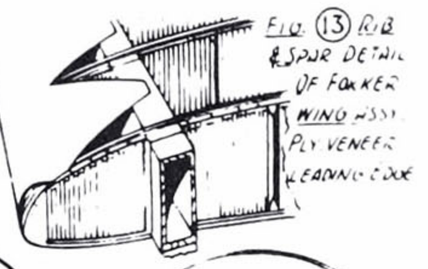

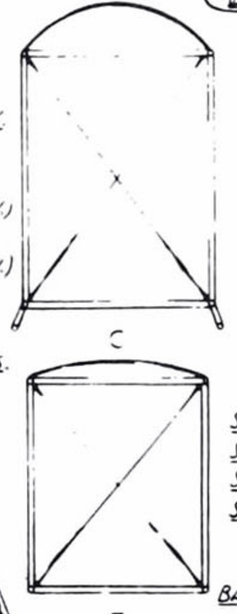

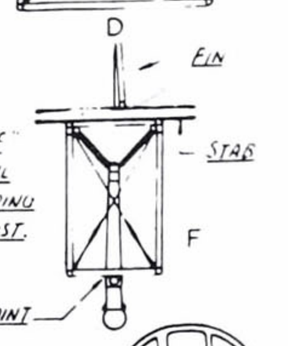

SHOWN AT LEFT IS SECTION OF MERCEDES INSTALLATION & COIL SPRING SHOCK ABSORBER SYSTEM OF LANDING GEAR. SKETCH AT RIGHT SHOWS "OFFICE" OF THE D-VII. ENGINE TACHOMETER MOUNTED ON SAME CROSSMEMBER OF REAR M.G. MOUNTS. LOCATIONS OF ALTIMETER & CLOCK VARIED IN ARRANGEMENT.

MAIN TANK FUEL PRESS. — TACH. — AUX. TANK FUEL PRESS.

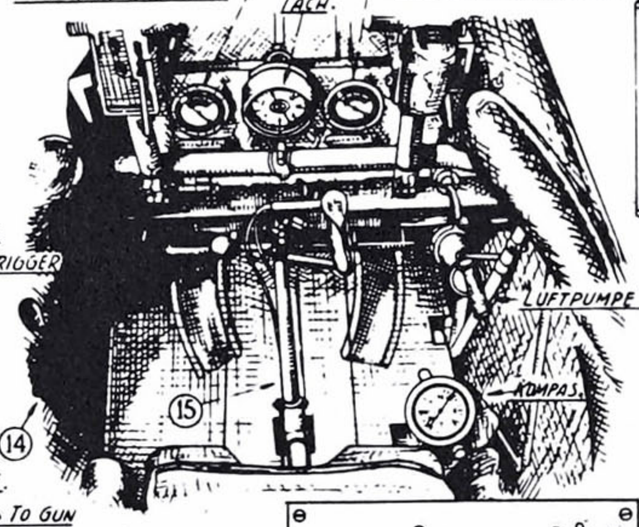

FIG. (14) MAIN THROTTLE & IGNITION CONTROL SEEN FROM OUTSIDE BODY. NOTE BOWDEN CABLES.

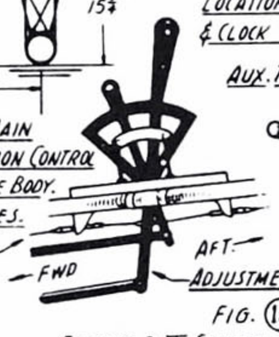

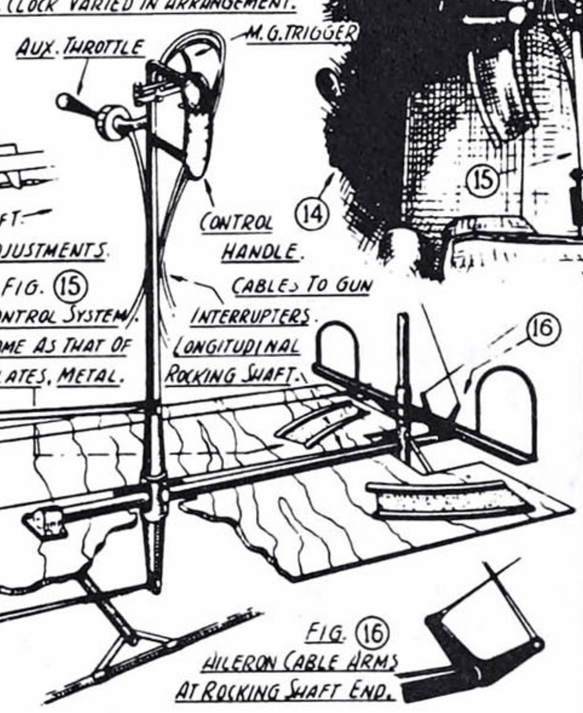

FIG. (15) FOKKER D-VII CONTROL SYSTEM. BUT FOR GRIP, SAME AS THAT OF FOK. DR-1. HEEL PLATES, METAL.

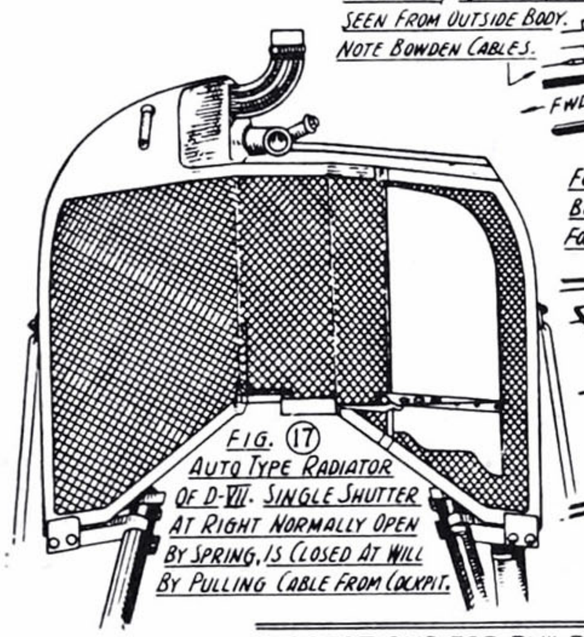

FIG. (17) AUTO TYPE RADIATOR OF D-VII. SINGLE SHUTTER AT RIGHT NORMALLY OPEN BY SPRING, IS CLOSED AT WILL BY PULLING CABLE FROM COCKPIT.

FIG. (16) AILERON CABLE ARMS AT ROCKING SHAFT END.

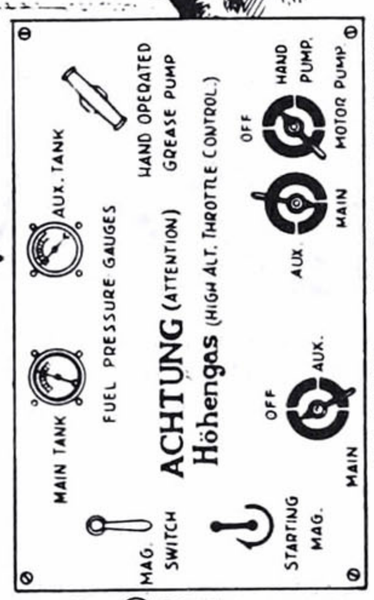

FIG. (18) D-VII INSTRUMENTS. ALTIMETER & CLOCK NOT SHOWN.

SUGGESTIONS FOR BUILDING A CONTROL-LINE MODEL OF THE FOKKER D-VII.

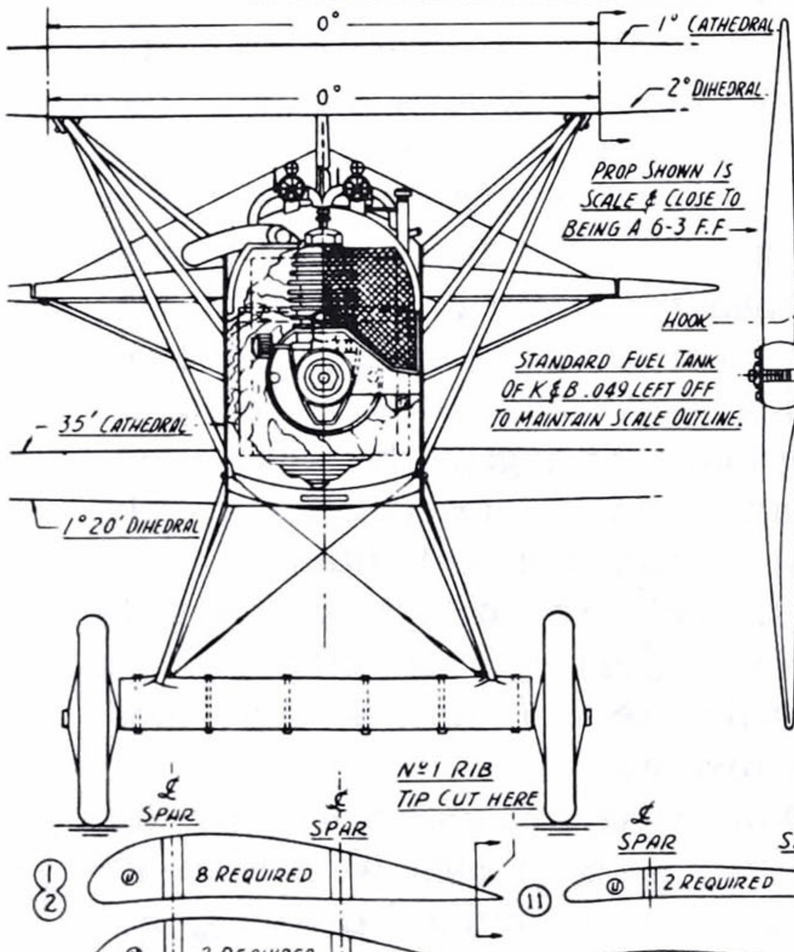

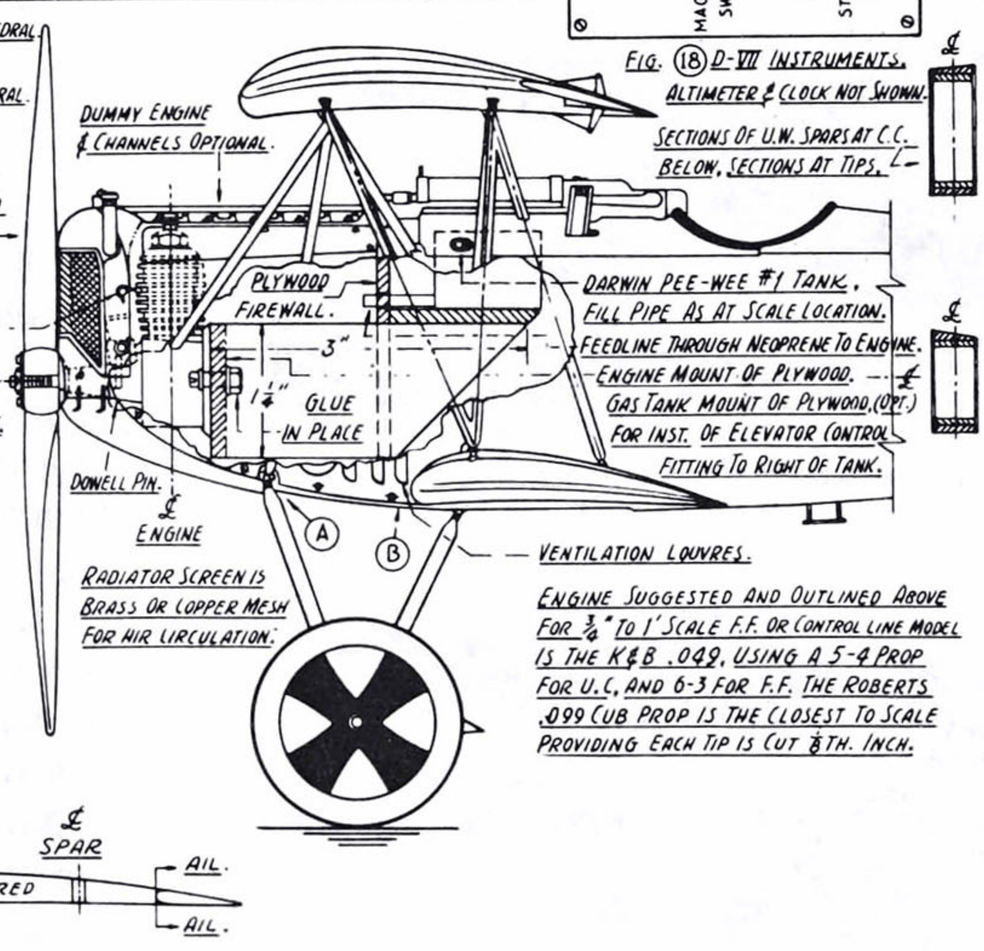

SECTIONS OF U.W. SPARS AT C.C. BELOW. SECTIONS AT TIPS.

DARWIN PEE-WEE #1 TANK. FILL PIPE AS AT SCALE LOCATION. FEEDLINE THROUGH NEOPRENE TO ENGINE. ENGINE MOUNT OF PLYWOOD. GAS TANK MOUNT OF PLYWOOD, (OPT.) FOR INST. OF ELEVATOR CONTROL FITTING TO RIGHT OF TANK.

ENGINE SUGGESTED AND OUTLINED ABOVE FOR ¾" TO 1' SCALE F.F. OR CONTROL LINE MODEL IS THE K&B .049, USING A 5-4 PROP FOR U.C. AND 6-3 FOR F.F. THE ROBERTS .099 CUB PROP IS THE CLOSEST TO SCALE PROVIDING EACH TIP IS CUT ⅛TH. INCH.

AS SHOWN ABOVE, ENGINE MOUNT IS FLUSHED AGAINST SIDES OF "STAIRCASE" BOX WHICH CONTAINS ALSO THE FUEL TANK & ELEVATOR CONTROL FITTINGS TO WHICH LINES ARE HOOKED. RADIATOR IS MADE TO LIFT OFF (FOR ACCESS TO ENGINE) AND IS HELD ON BY DOWELL PIN & HOOKS ON THE SIDES. OVERFLOW DRAINS (SCALE) AT POINTS A & B.

WING RIB OUTLINES.
(W) - UPPER WING.
(L) - LOWER WING.

THE UPPER SURFACE OF THE TOP WING HAD CATHEDRAL ANGLE OF 1° FROM 42" STATION OF SHIP ℄ TO TIP. UNDER SURFACE OF TOP WING, 2° DIHEDRAL. UPPER SURFACE, LOWER WING, 35' CATHEDRAL FROM BODY TO TIPS & 1°20' DIHEDRAL ON UNDER SURFACE.

Fokker E.V/D.VIII

drawings by PHILLIP DREWS

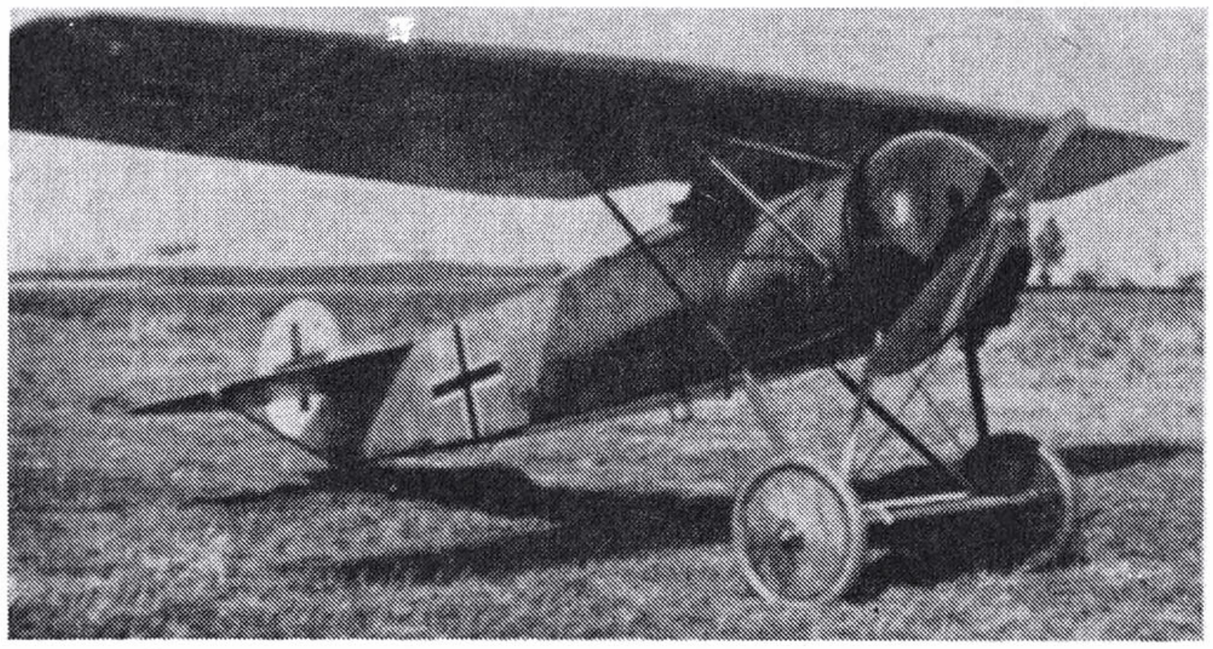

The Fokker D.VIII was unique in several respects. Full cantilever wing, no struts and good performance gave its pilots a tremendous advantage over their foes. Photo courtesy of "Fokker, the Man and the Aircraft."

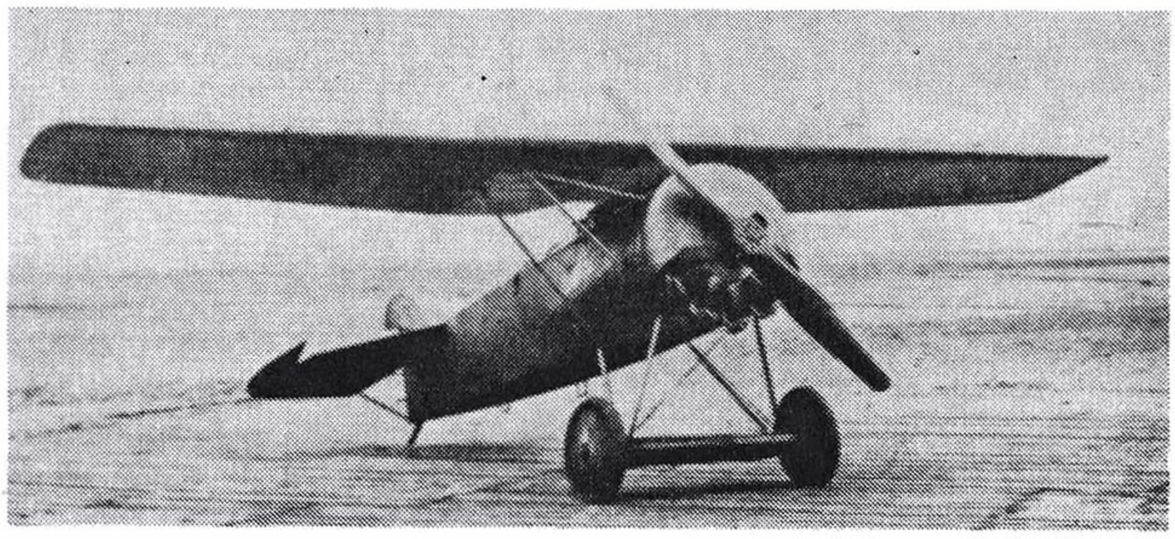

The 110-hp Oberursel rotary, Siemens-Halske, Goebel, and Le Rhone engines were used on various versions of the D.VIII.

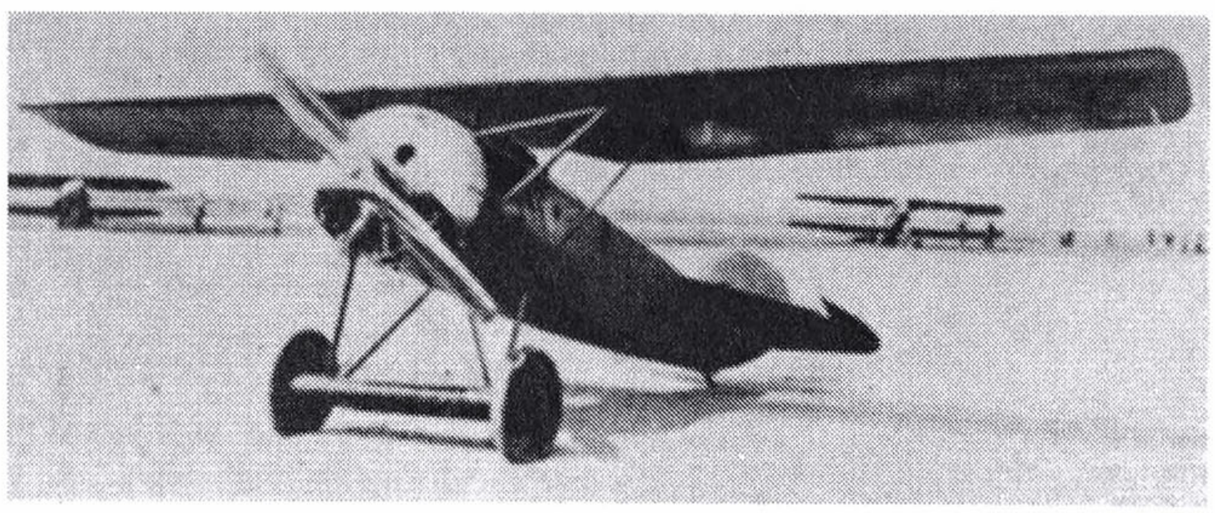

An extremely clean design for WW I, the Fokker D.VIII was a formidable weapon in the hands of German pilots.

DURING the closing weeks of WW I, there appeared over the front lines a nimble little monoplane that is generally credited as being the finest fighter of its day. This was the famous Fokker D.VIII of the German Imperial Air Force.

Powered by a rotary Oberursel engine of 110 hp, the D.VIII had a speed of 127 mph. It climbed at a rate of 1,500 fpm and could ascend over 4 miles high. In its ability to maneuver and dive it was unequaled. The first production E.V's (called D.VIII) were so badly built by the Fokker factory that several crashes resulted, and the type was grounded until the defects could be located and remedied. By the time proper construction procedures were established at the factory, the War was almost over; the D.VIII saw almost no service.

Also known as the Fokker E.V and the "Flying Razor," it gained much of its reputation in the hands of the famous German pilot Ernst Udet. Even after the war Udet toured small German towns giving mock demonstrations of aerial dog fights. Strangely, these illegal performances were not detected by the Allied Occupation authorities.

Of the many designs credited to Anthony Fokker, the D.VIII or E.V was probably one of the best—and most controversial.

Note: recent research has shown that the two spars in each wing were not parallel, as in Drews' drawing, but tapered together toward each tip—and each spar was made in one piece.

One D.VIII survives, now on exhibition in Italy. □

ENGINE DATA

V26 PROTOTYPE	OBERURSEL UR II	110HP
V28 PROTOTYPE	OBERURSEL UR III	145HP
	GOEBEL GOE III	160HP
EV	LE RHONE	110HP
	OBERURSEL UR II	110HP
D VIII	SAME AS EV	
D VIIIe	OBERURSEL UR III	145HP
D VIIIg	GOEBEL GOE IIIa	200HP
D VIIIs	SIEMENS-HALSKE SH IIIa	220HP

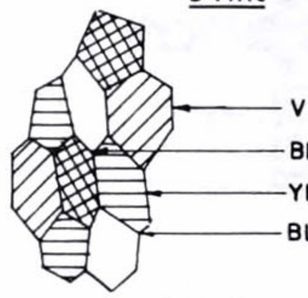

UPPERSURFACE FABRIC COLOR SCHEME

NOTE

WING SURFACES, UPPER AND LOWER, WERE PAINTED DARK GREEN.

11 CYLINDER 145 HP OBERURSEL EXAMPLE

UNDERSURFACE FABRIC COLOR SCHEME

NOTE

COLOR DESCRIPTIONS ARE ONLY APPROXIMATE. THE APPLICATION OF DOPES AND VARNISHES TENDED TO GIVE ALL COLORS A BROWNISH TINT.

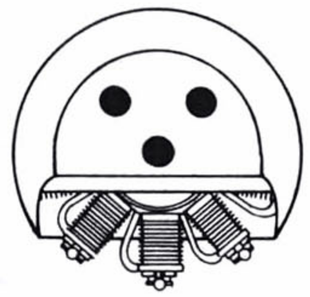

110HP OBERURSEL EXAMPLE

NOTE

ALL STRUTS AND PLYWOOD PANELS WERE PAINTED DARK GREEN.

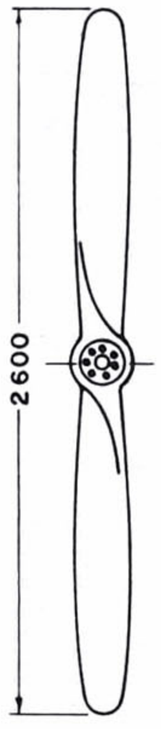

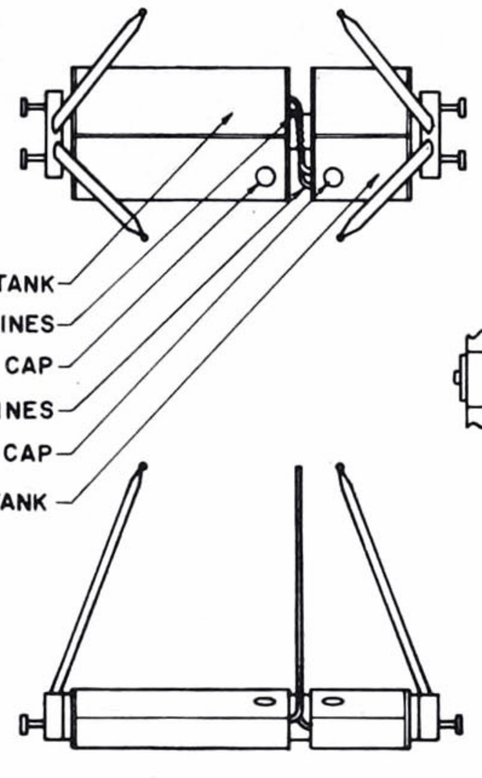

SUBWING TANK INSTALLATION OF EV 238/18
(PLYWOOD SKIN REMOVED)

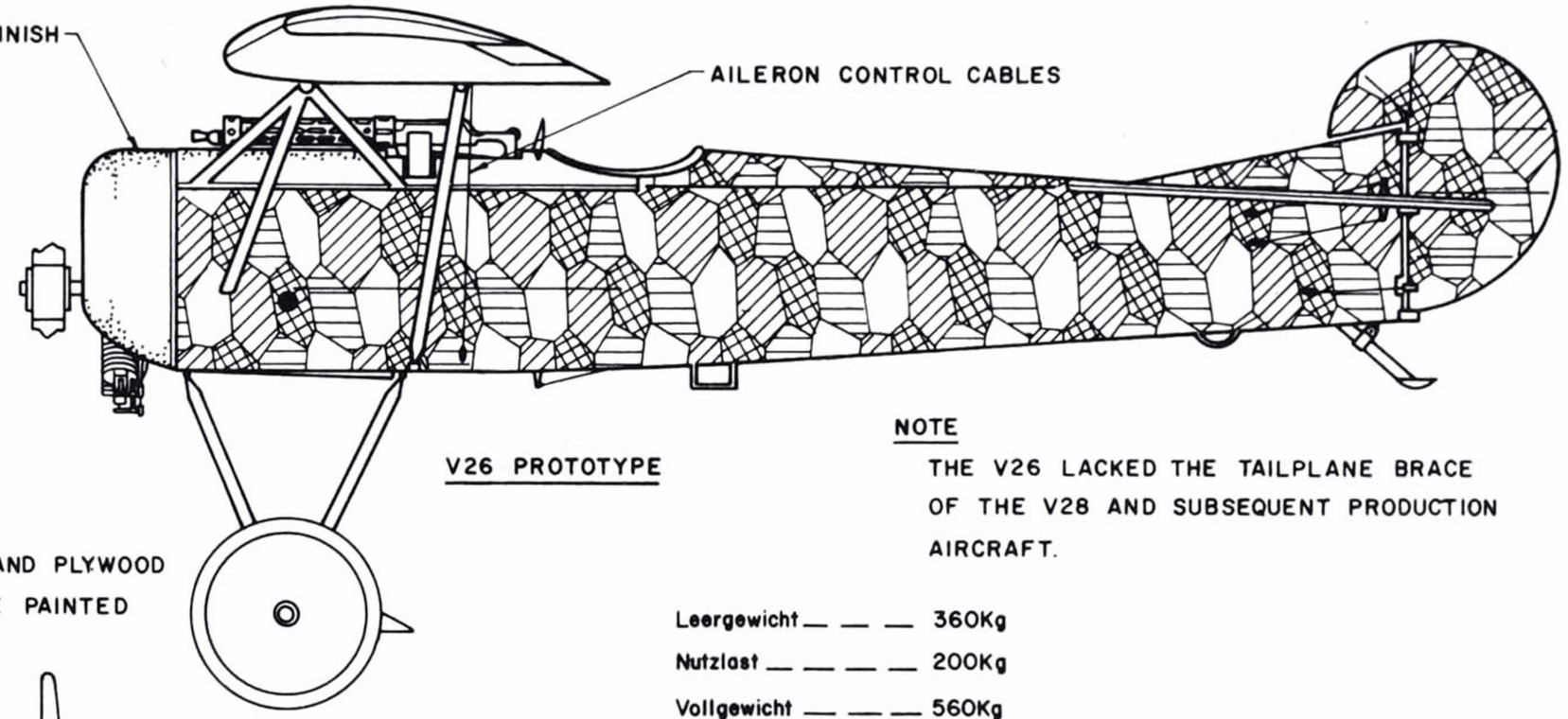

V26 PROTOTYPE

NOTE

THE V26 LACKED THE TAILPLANE BRACE OF THE V28 AND SUBSEQUENT PRODUCTION AIRCRAFT.

Leergewicht _ _ _ 360Kg
Nutzlast _ _ _ _ 200Kg
Vollgewicht _ _ _ 560Kg

WEIGHTS DATA (STENCILED PORT SIDE ONLY)

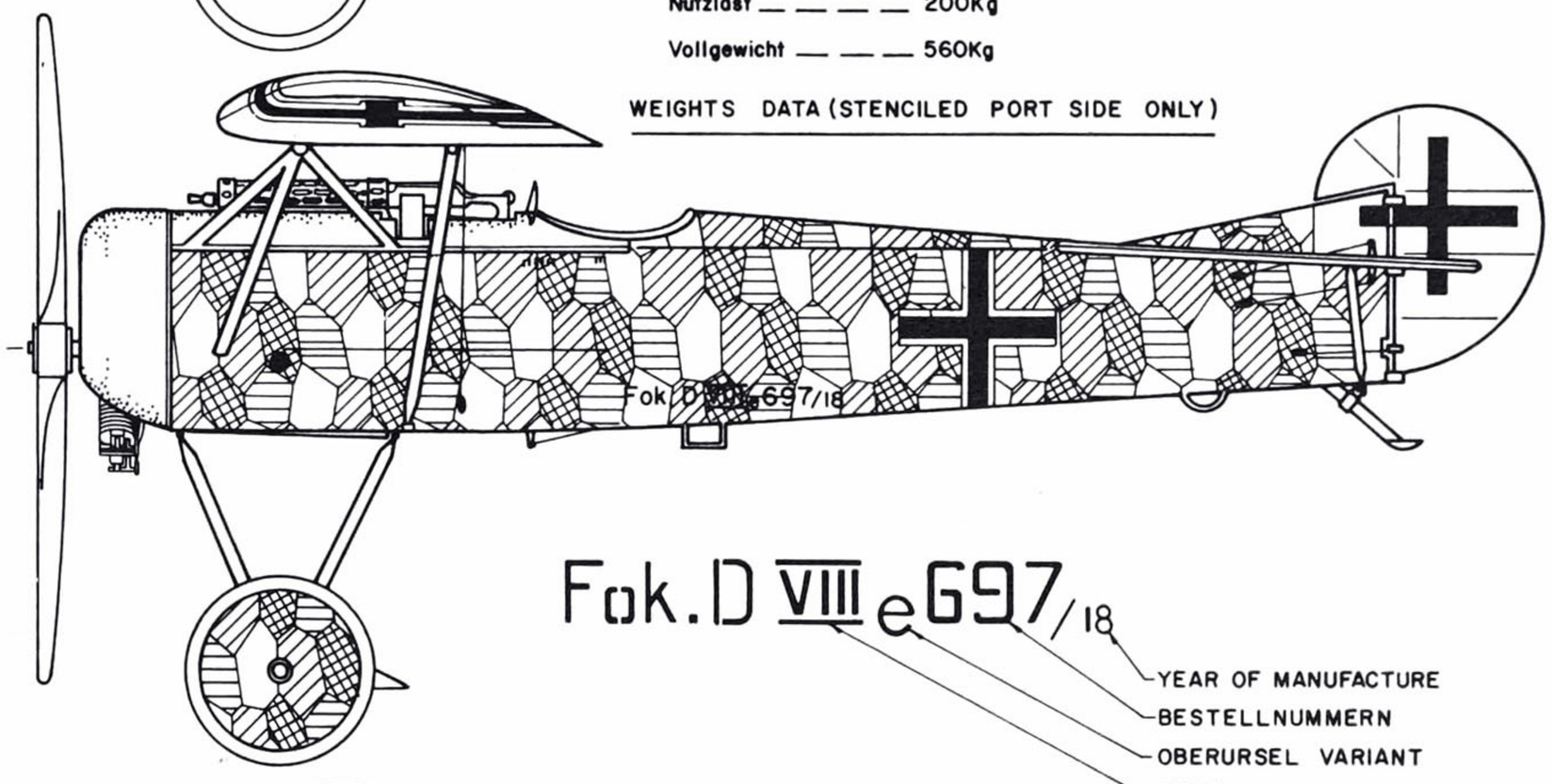

Fok. D VIII e697/18

- YEAR OF MANUFACTURE
- BESTELLNUMMERN
- OBERURSEL VARIANT
- TYPE

CODE BREAKDOWN (STENCILED BOTH SIDES)

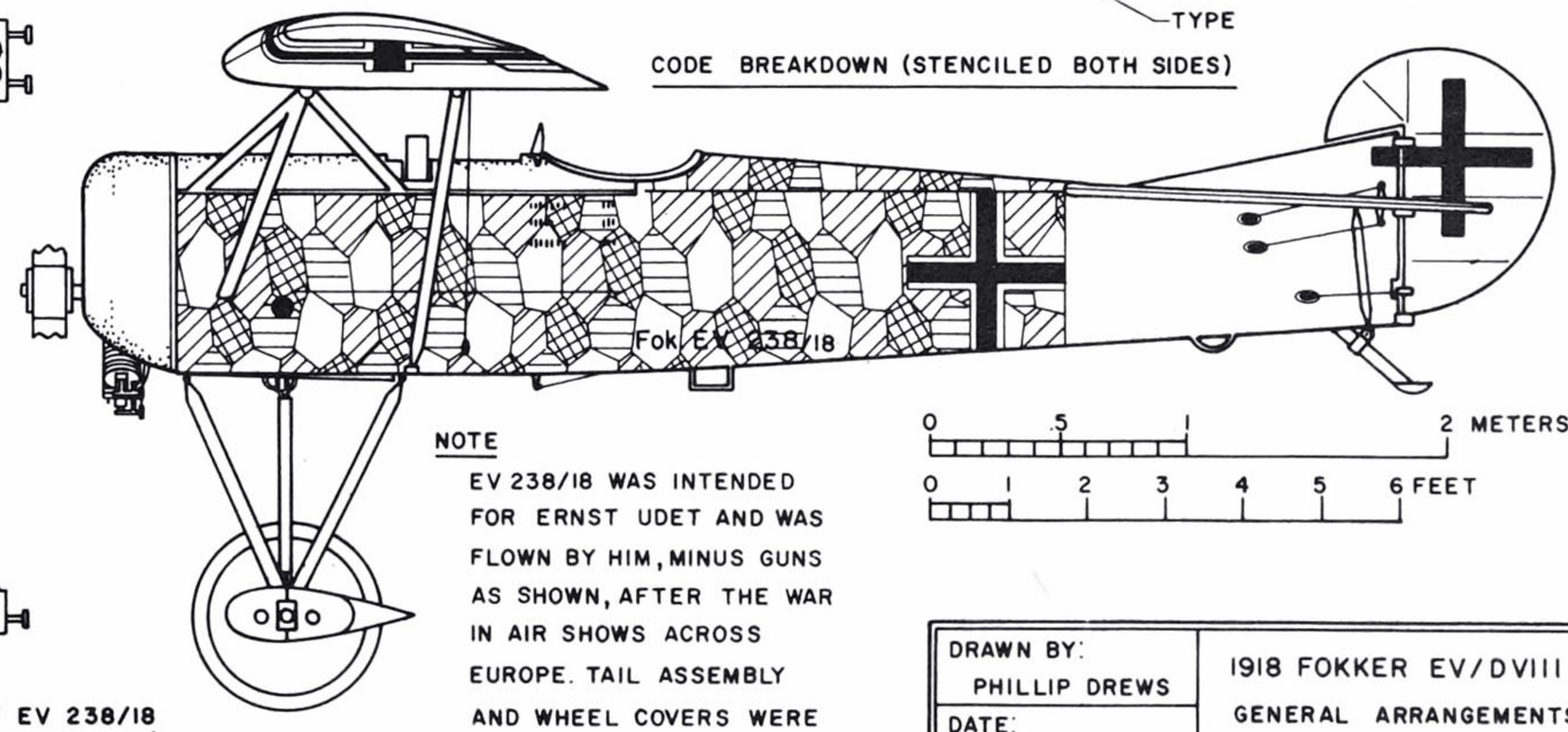

NOTE

EV 238/18 WAS INTENDED FOR ERNST UDET AND WAS FLOWN BY HIM, MINUS GUNS AS SHOWN, AFTER THE WAR IN AIR SHOWS ACROSS EUROPE. TAIL ASSEMBLY AND WHEEL COVERS WERE PAINTED BRIGHT BLUE.

0 .5 1 2 METERS
0 1 2 3 4 5 6 FEET

DRAWN BY: PHILLIP DREWS	1918 FOKKER EV/DVIII GENERAL ARRANGEMENTS
DATE: FEBRUARY 1973	

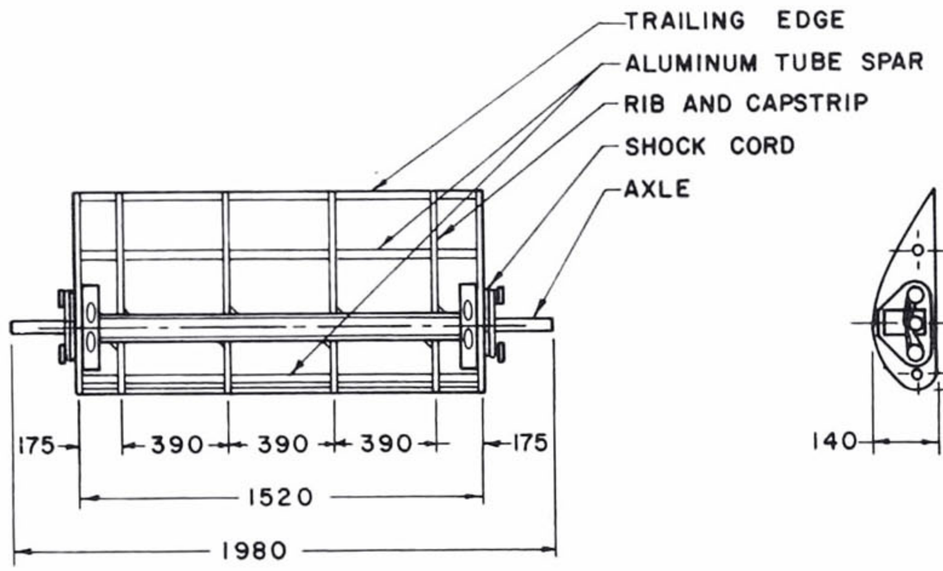

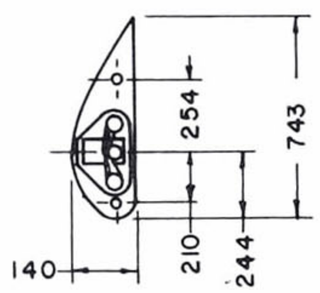

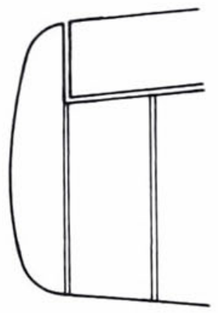

PROTOTYPE WINGTIP

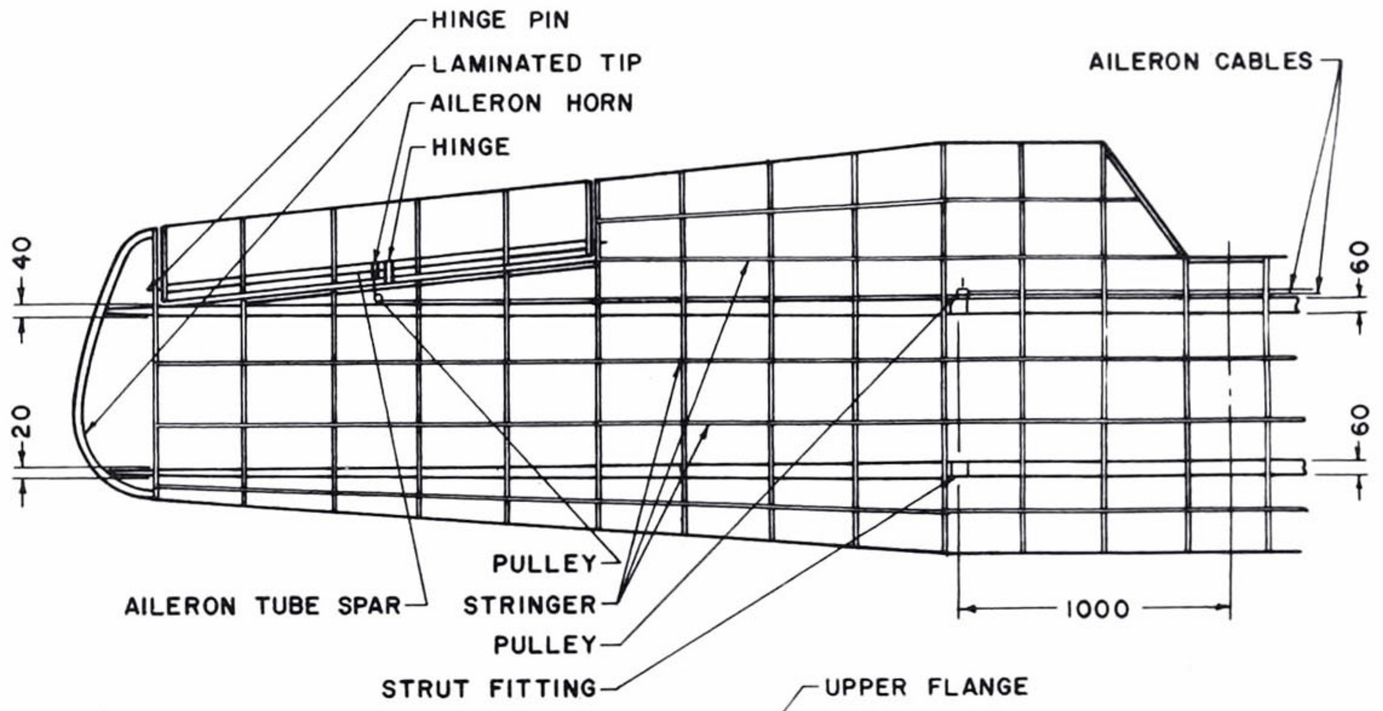

SUBWING LAYOUT

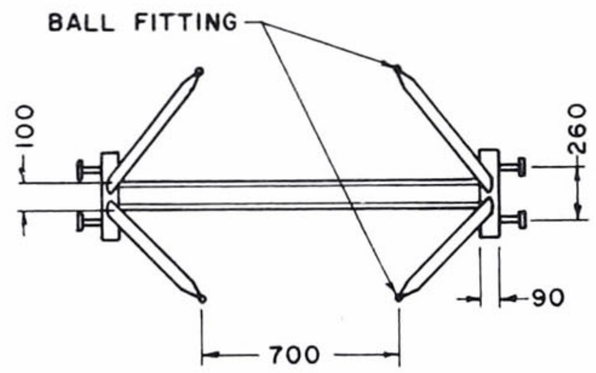

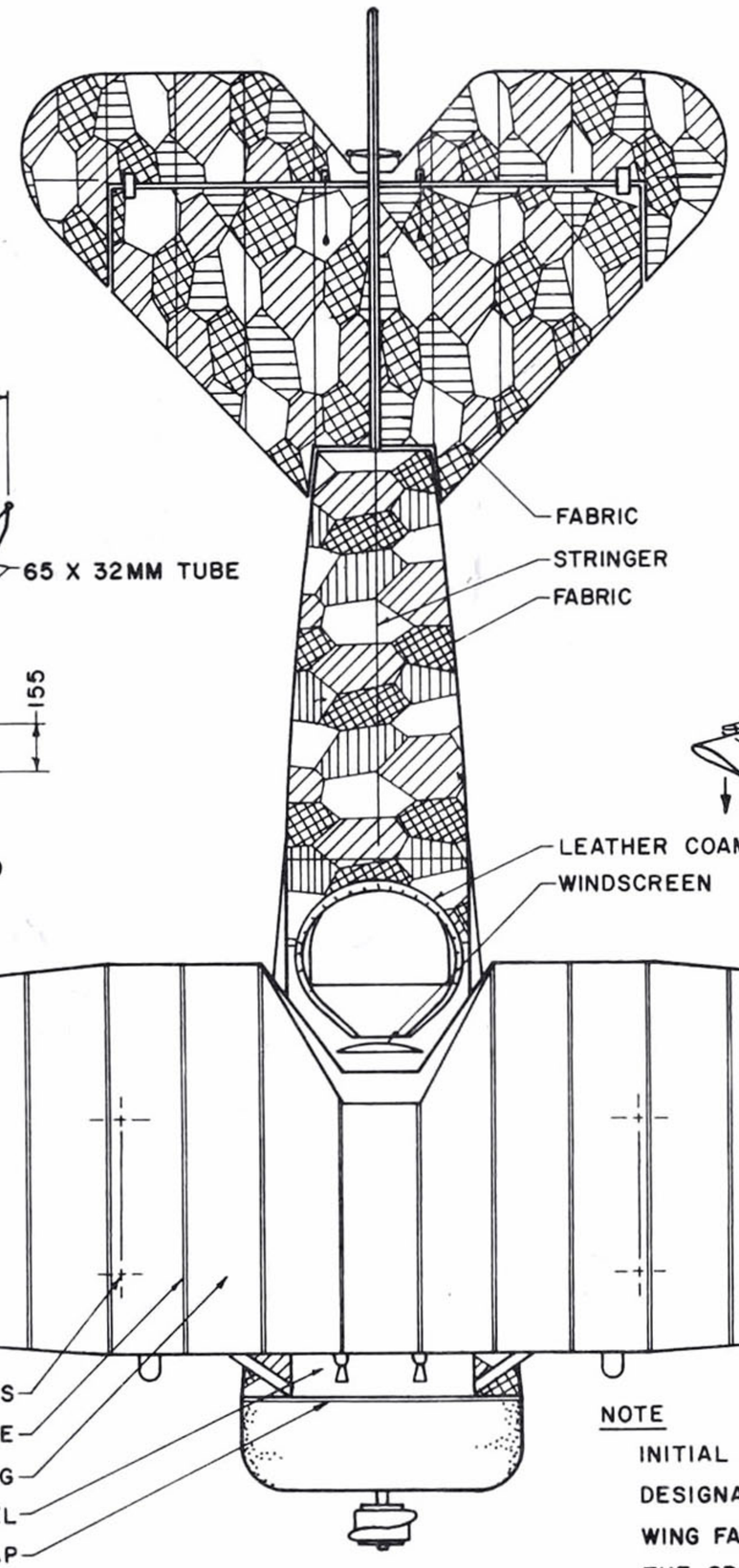

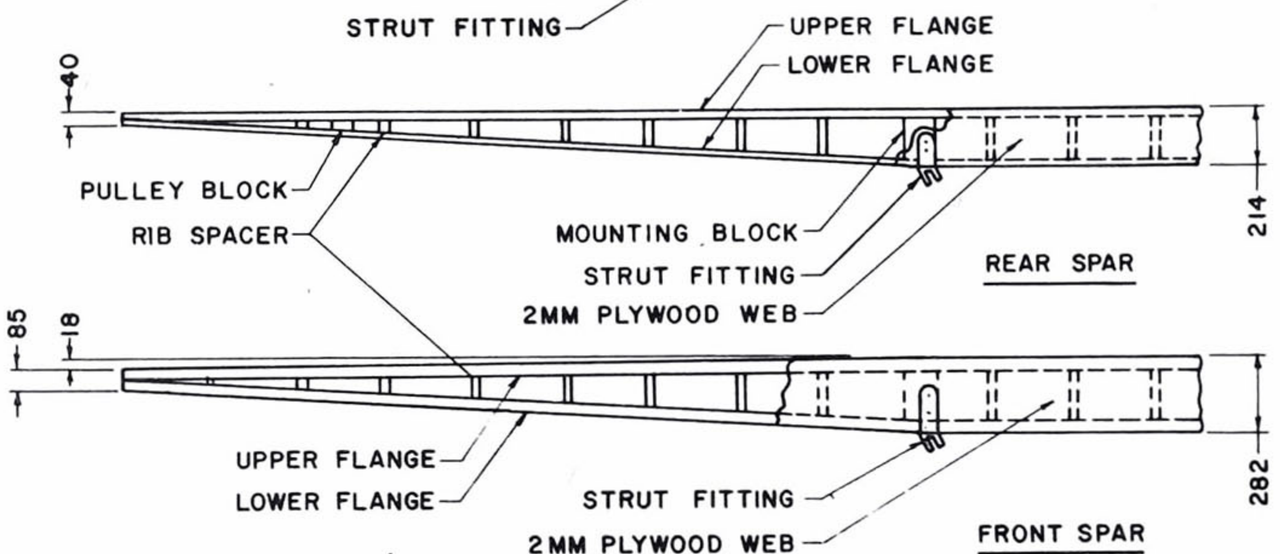

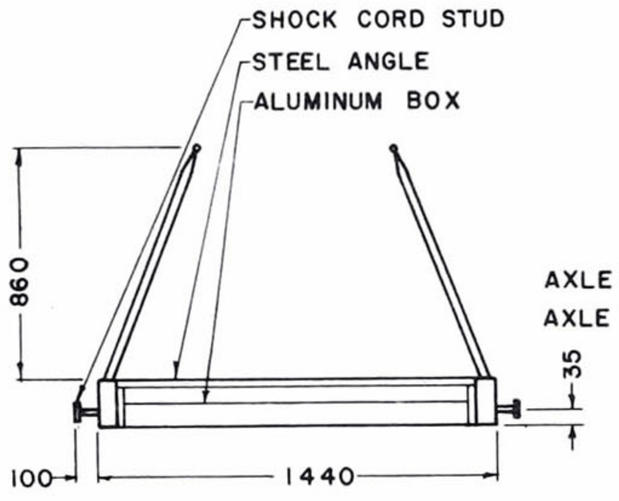

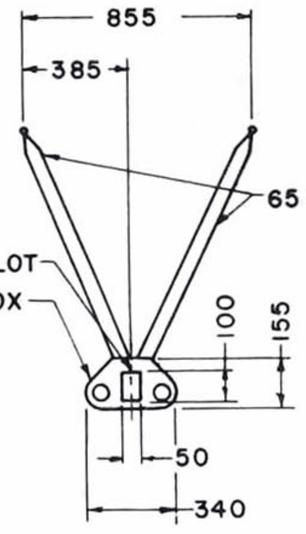

LANDING GEAR LAYOUT

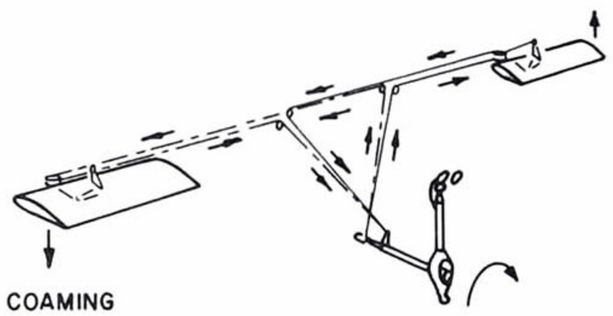

AILERON CONTROL DIAGRAM

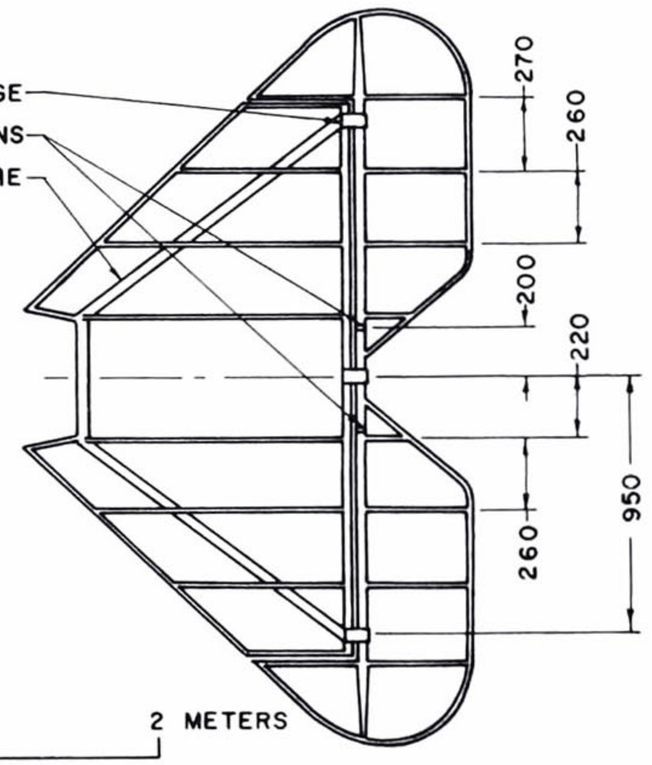

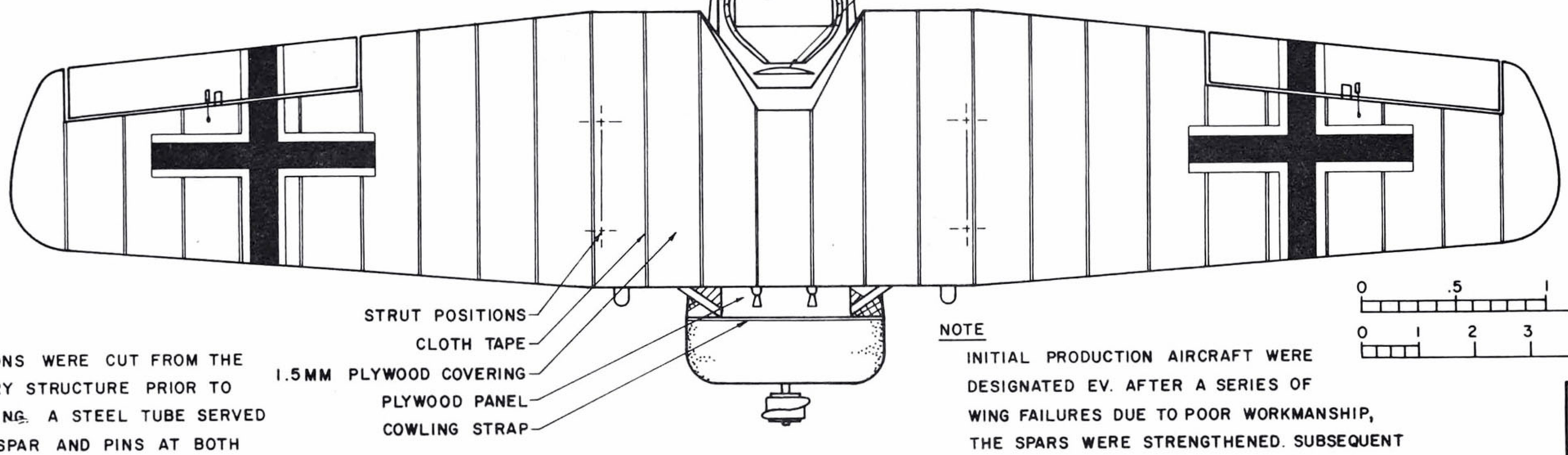

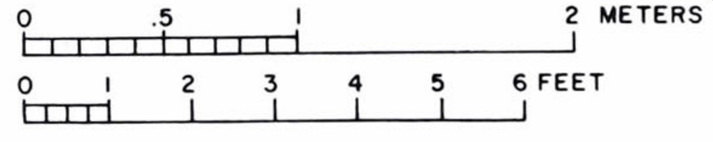

NOTE

AILERONS WERE CUT FROM THE PRIMARY STRUCTURE PRIOR TO COVERING. A STEEL TUBE SERVED AS A SPAR AND PINS AT BOTH ENDS HINGED THEM TO THE MAINPLANE.

NOTE

INITIAL PRODUCTION AIRCRAFT WERE DESIGNATED EV. AFTER A SERIES OF WING FAILURES DUE TO POOR WORKMANSHIP, THE SPARS WERE STRENGTHENED. SUBSEQUENT AIRCRAFT AND THOSE REFITTED WITH THE MODIFIED WINGS WERE DESIGNATED D VIII.

DRAWN BY PHILLIP DREWS	1918 FOKKER EV/DVIII WING AND LANDING GEAR DETAILS
DATE: FEBRUARY 1973	

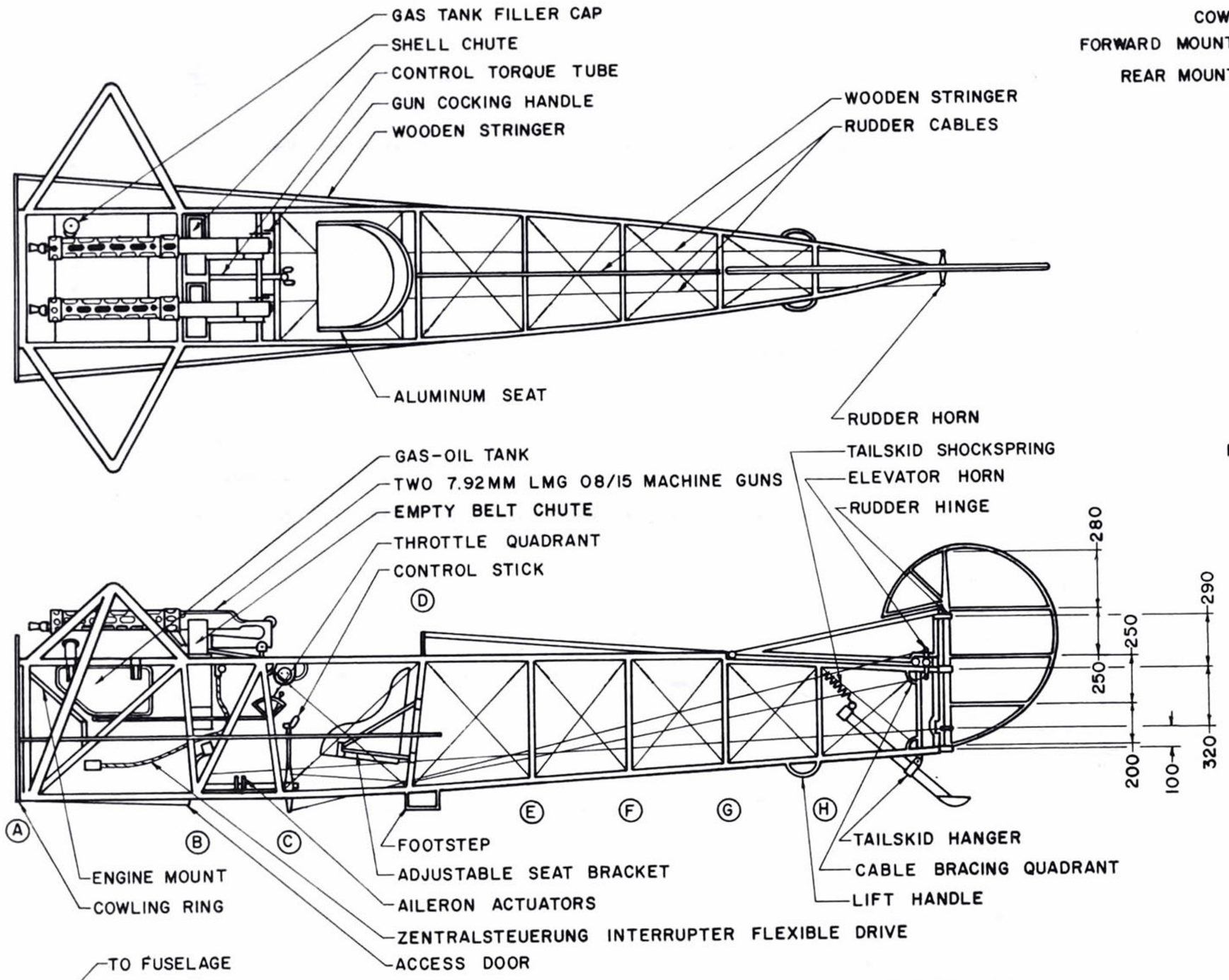

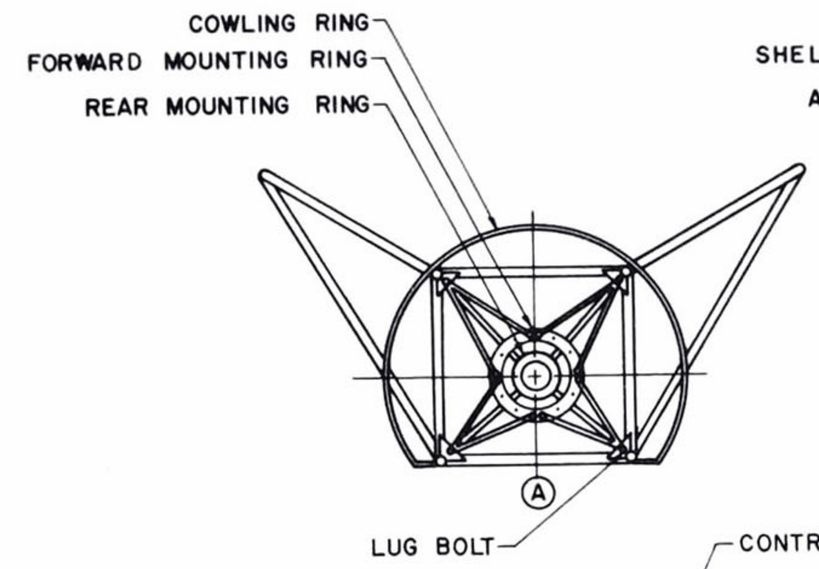

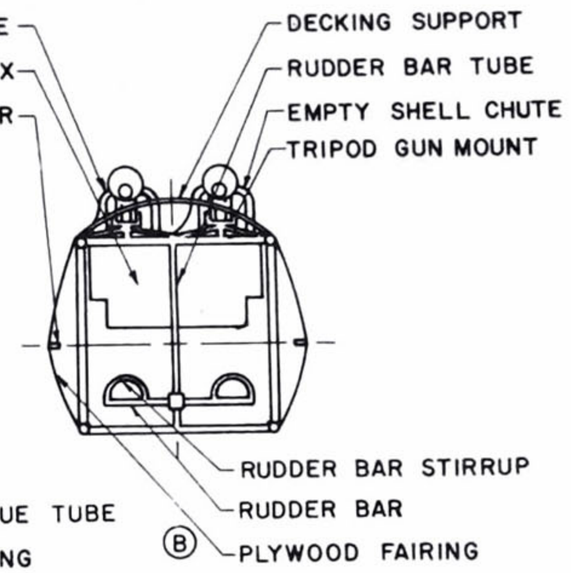

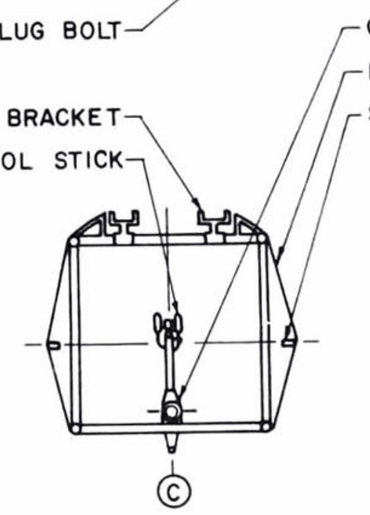

NOTE
SLIP-TUBES ON FUSELAGE FRAME GIVES SEAT ADJUSTMENT.

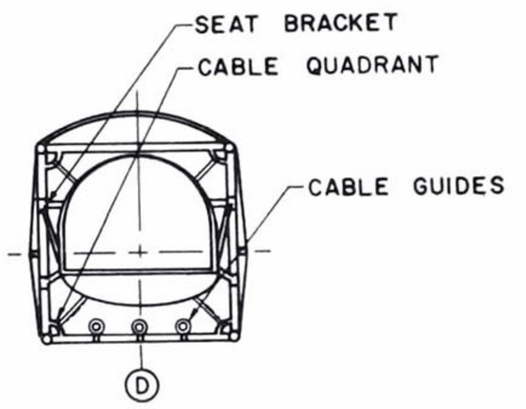

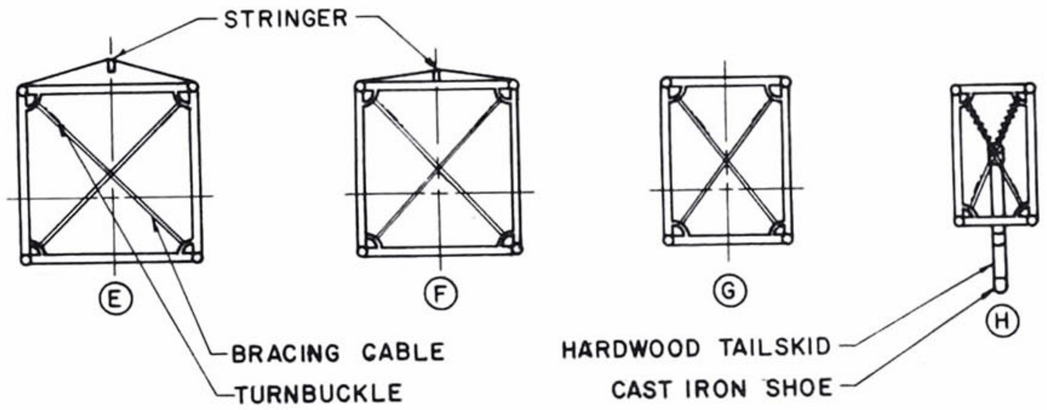

NOTE
SINGLE CABLE WAS LOOPED THROUGH CORRESPONDING QUADRANTS AND MATED TO A SINGLE TURNBUCKLE. NO ANCHORING CLEVIS WAS NEEDED.

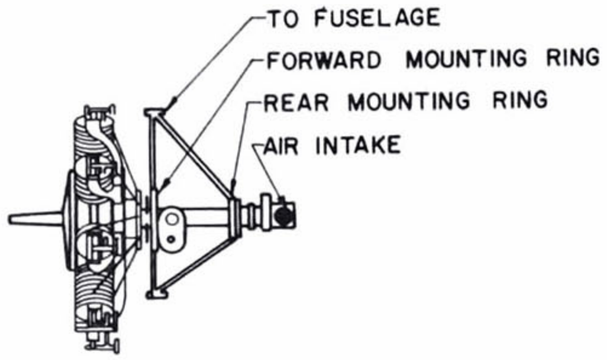

ENGINE INSTALLATION

NOTE
ENGINE AND MOUNT WERE REMOVABLE AS A SINGLE UNIT

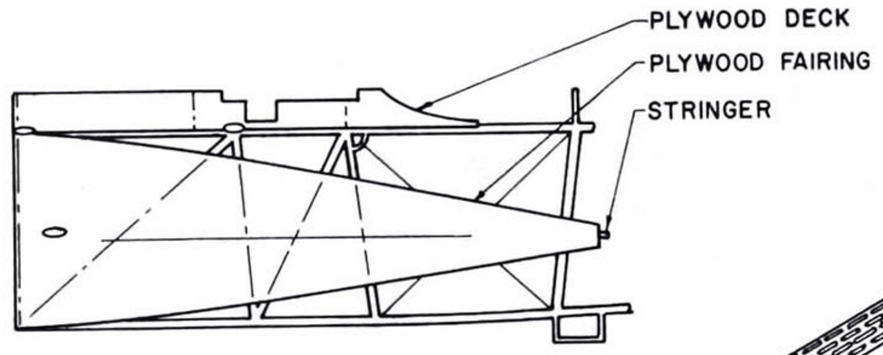

FAIRING DETAIL

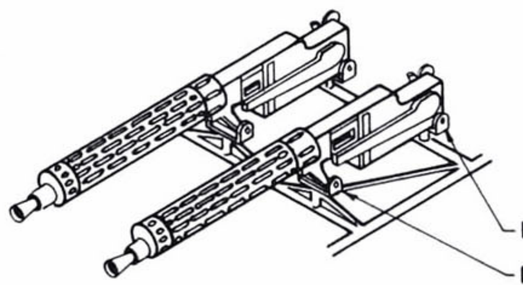

MACHINE GUN DETAIL

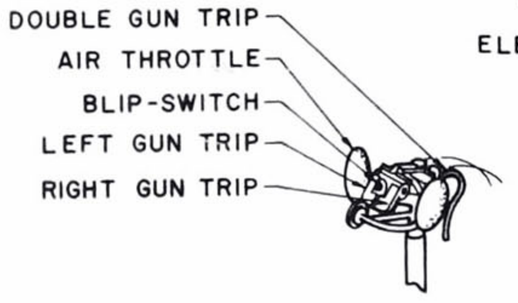

GRIP DETAIL

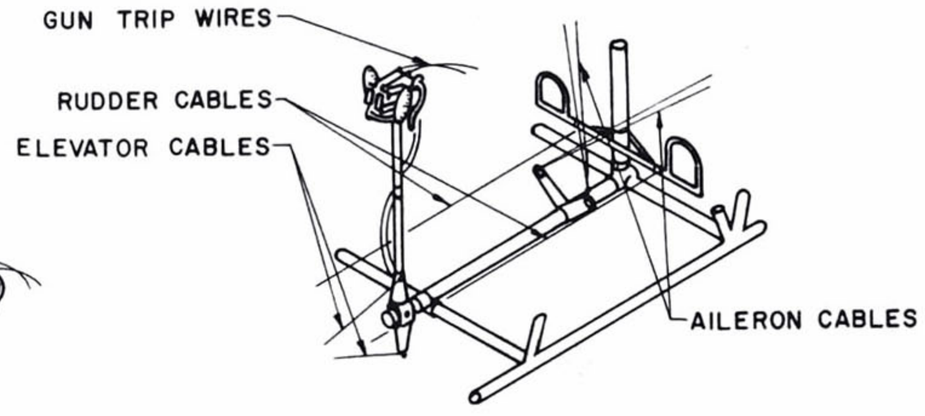

FLIGHT CONTROL DETAIL

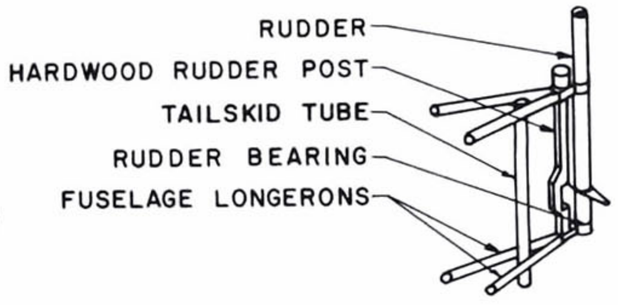

TAIL SECTION DETAIL

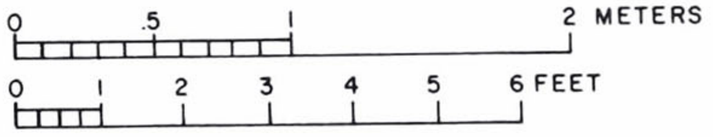

DRAWN BY PHILLIP DREWS	1918 FOKKER EV/DVIII FUSELAGE DETAILS
DATE: FEBRUARY 1973	

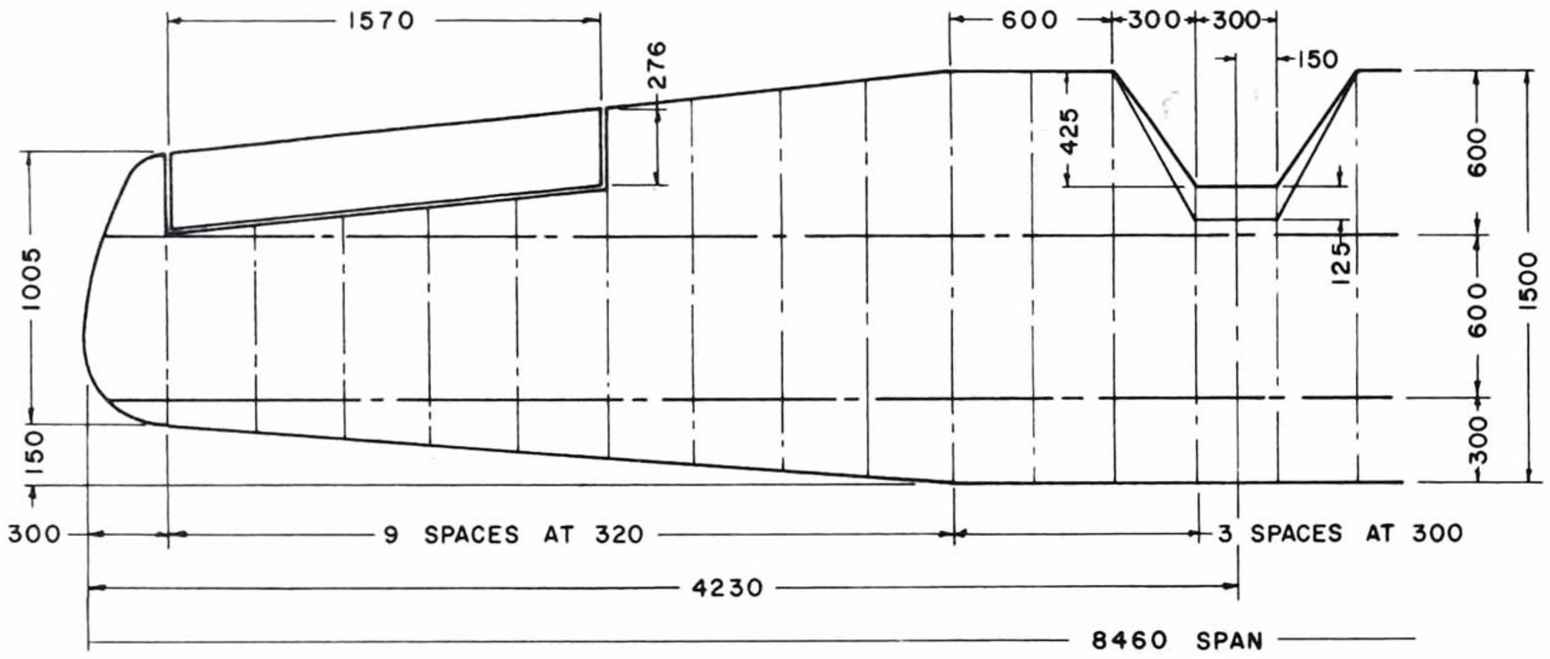

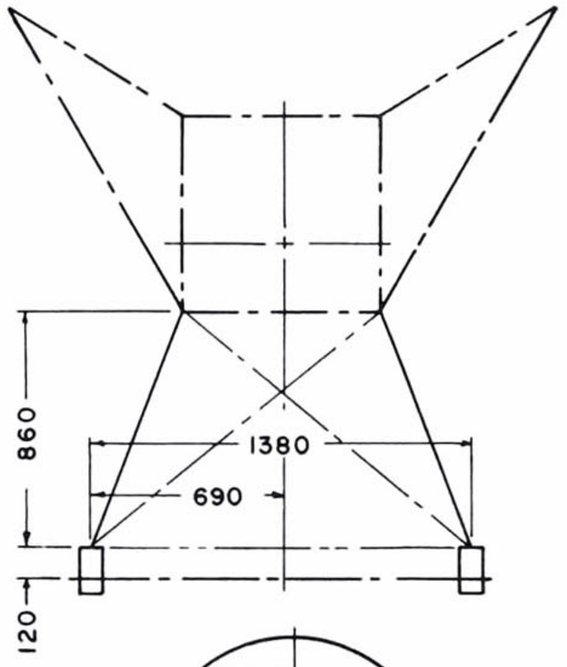

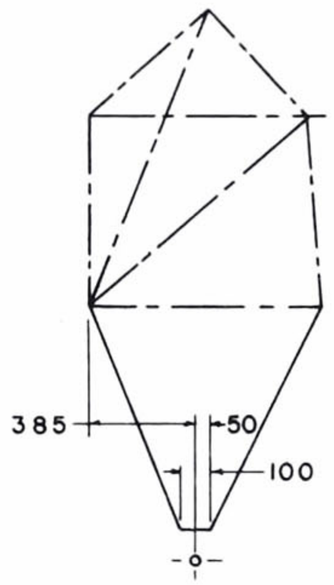

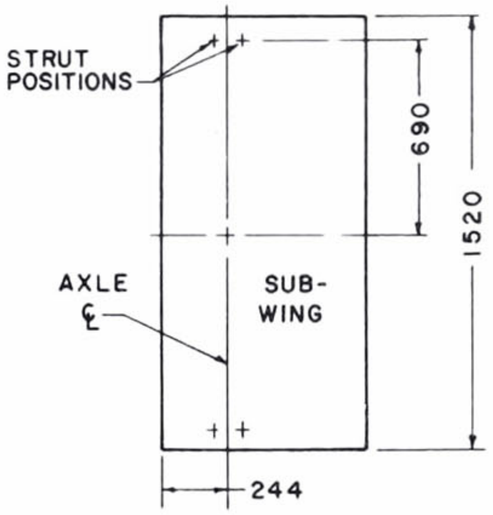

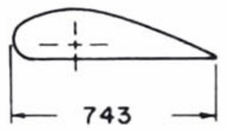

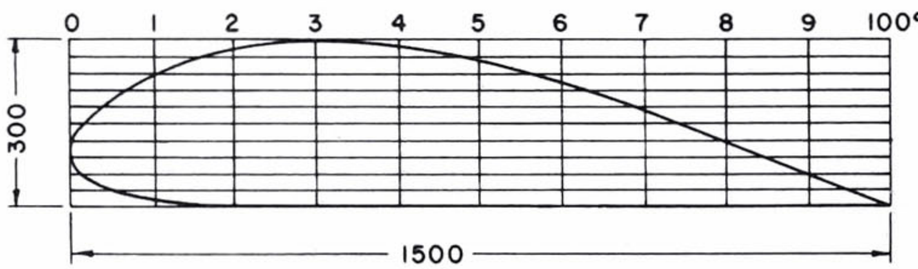

WING RIB AT STRUT ATTACHMENT POINTS

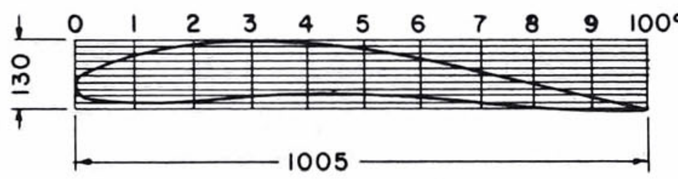

WING RIB AT TIP

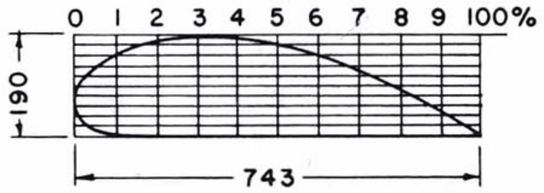

SUBWING

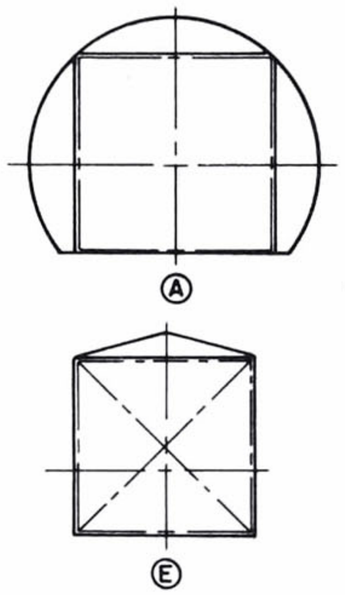

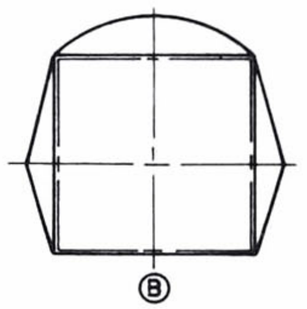

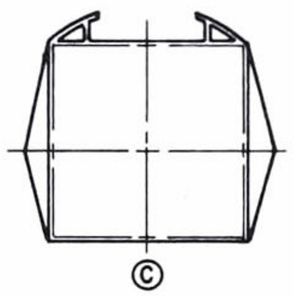

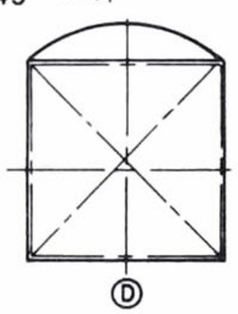

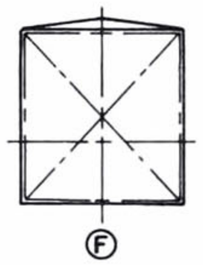

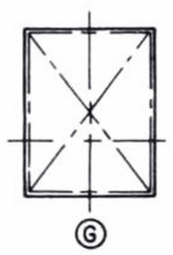

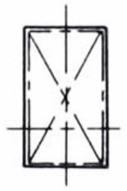



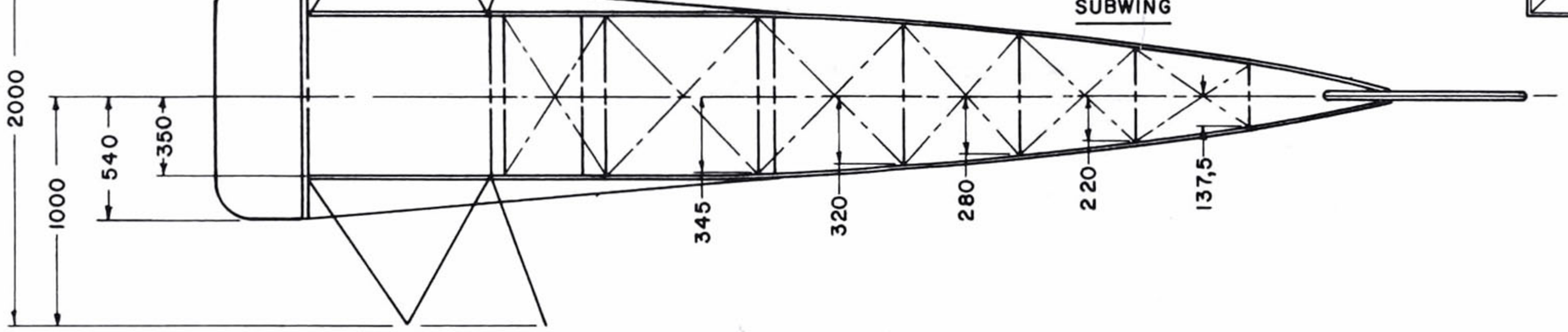

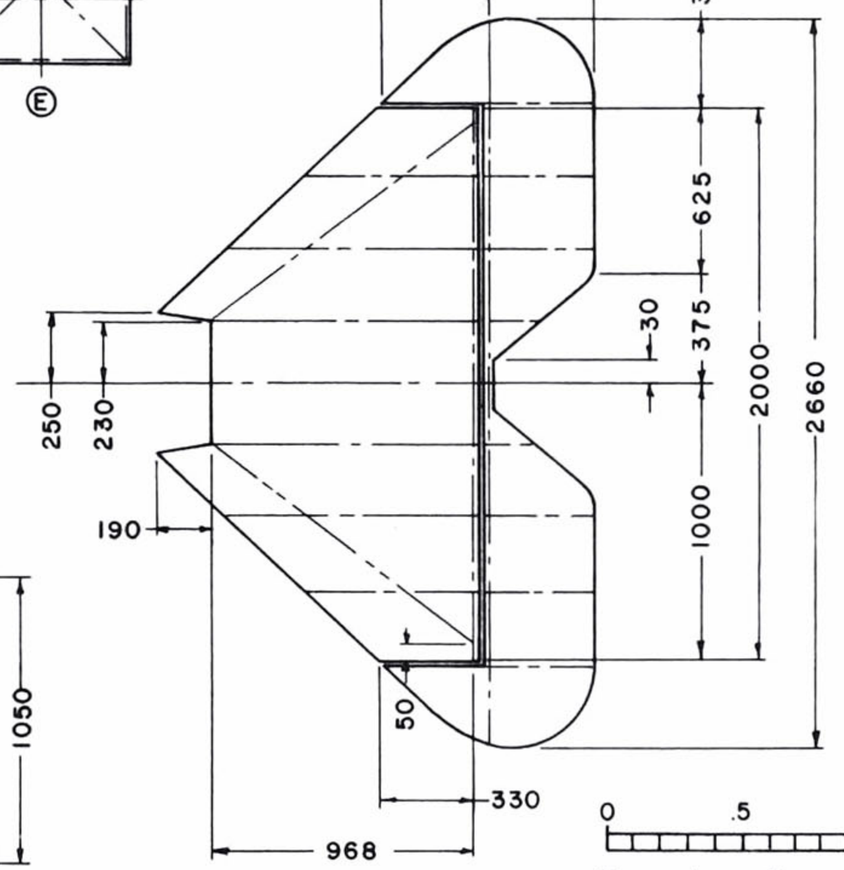

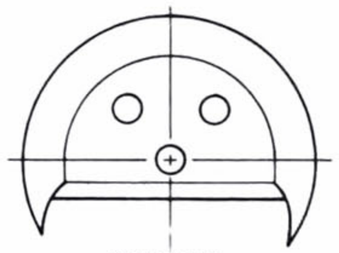

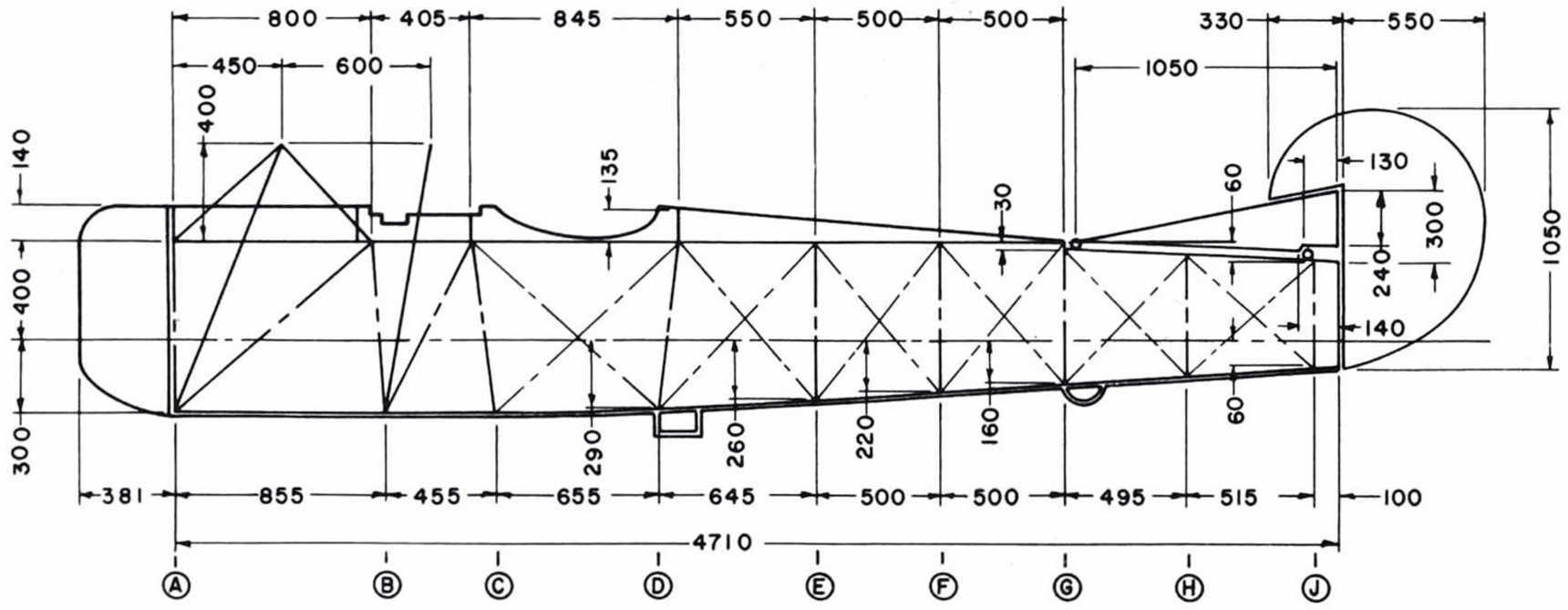

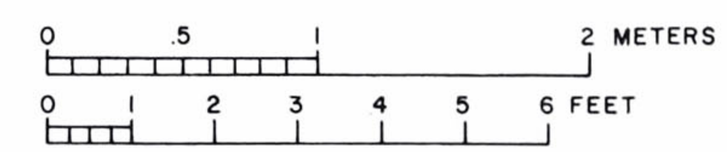

DRAWN BY: PHILLIP DREWS	1918 FOKKER EV/DVIII
DATE: FEBRUARY 1973	GENERAL LAYOUT

Hansa-Brandenburg

drawings by WILLIS NYE

C.I

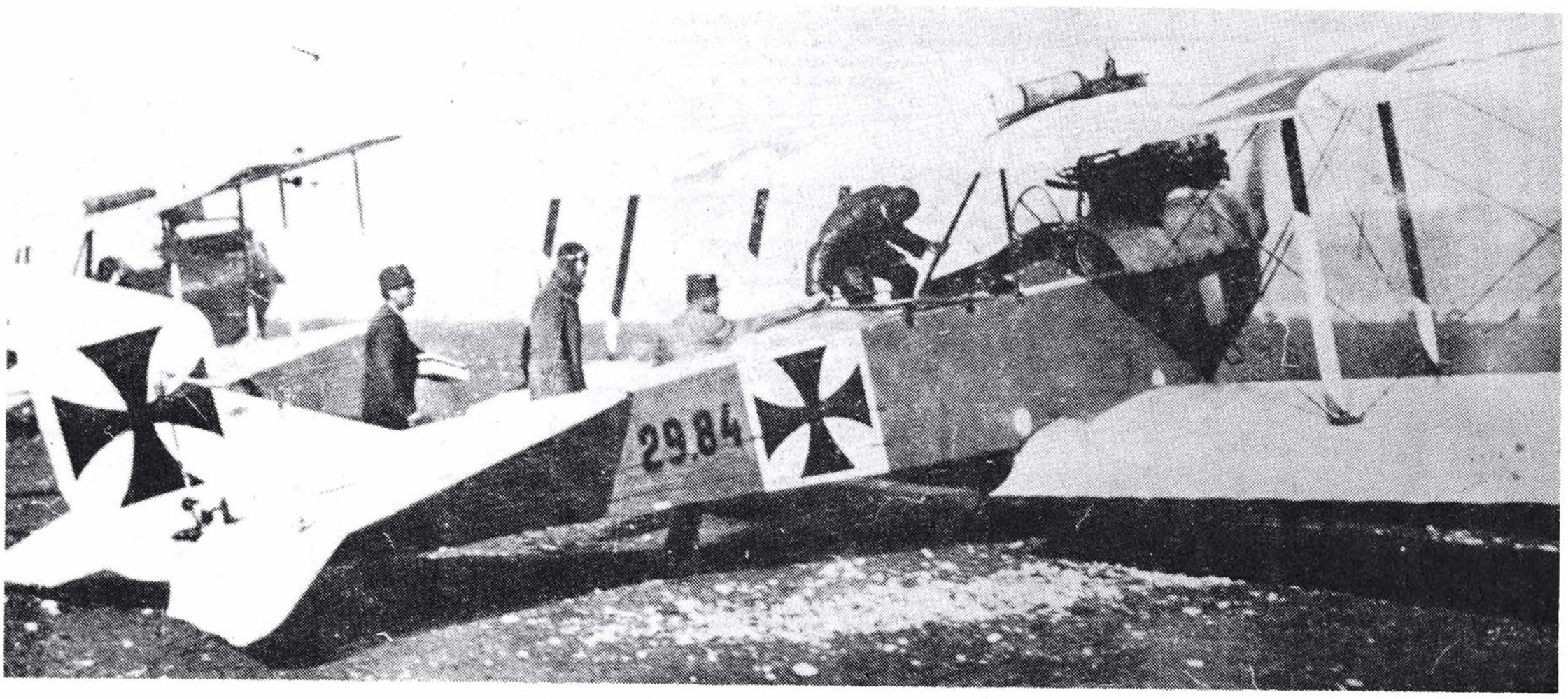

Having a top speed of a little over 100 mph, the C.I was still able to carry a heavy load but was vulnerable to Allied fighters. Photo courtesy of Leonard Opdycke, World War I Aeroplanes.

ERNST HEINKEL designed this big two-seater for the German Brandenburg firm, and it was built under license in Austria. Powered by a variety of engines of 160-230 hp, the C.I carried a heavy load with good performance, cruising at over 100 mph.

Willis Nye's drawing is mistitled Brandenburg LDD: this was a smaller Austrian two-seater, sometimes referred to as "The Little Brandenburg," to distinguish it from the C.I, "The Big Brandenburg."

There are none left. □

HANSA-BRANDENBURG "MODEL LDD"

RESPECTIVE WEIGHTS OF COMPONENTS OF AIRPLANE	
AIRPLANE STRUCTURE, ENGINE, RADIATOR, RADIO, FUEL, OIL, GUNS, ETC.	614 KG.
WATER FOR RADIATOR	43
TAIL SURFACES (VERTICAL AND HORIZONTAL)	19
WINGS (TOP AND BOTTOM) INCLUDING CONTROLS	122
FIXED MACHINE GUN MOUNTED ON UPPER WING	30
ACCESSORIES (MISCELLANEOUS)	15
MOBILE MACHINE GUN AND AMMUNITION	30
INSTRUMENTS AND MOUNTING	5
RADIO EQUIPMENT, TRAILING ANTENNA	15
PILOT AND OBSERVER	150
FUEL (FUSELAGE TANK)	100
OIL (ENGINE CRANKCASE)	15
FUEL (EMERGENCY FUEL TANK UPPER WING)	70
INTERPLANE STRUTS	20
TOTAL AIRPLANE WEIGHT	1,248 KG.

THE FUEL SYSTEM CONSISTS OF THE MAIN FUSELAGE TANK AND AN EMERGENCY TANK MOUNTED ON UPPER WING. FUEL WAS SUPPLIED BY GRAVITY TO THE ENGINE. FUEL WAS PUMPED TO UPPER TANK BY PILOT OPERATING A FORCE PUMP IN SERIES WITH FUSELAGE TANK.

THIS AIRPLANE IS KNOWN AS THE HANSA-BRANDENBURG AND WAS THE AUSTRIAN VERSION OF THE GERMAN ALBATROSS TYPE. IT WAS INTENDED FOR AIR RECONNOISSANCE FUNCTIONS. THE AIRPLANE WAS FIRST DESIGNED IN 1914 AND FLOWN ON THE EASTERN FRONT. THE AIRPLANE WAS BUILT BY AN AIRCRAFT CONCERN THAT BUILT SEAPLANES FOR THE GERMAN NAVY.

THIS AIRPLANE WAS EASY PREY TO ALLIED FIGHTERS DUE TO ITS POOR PERFORMANCE, LOW ENGINE POWER, AND SLUGGISH MANEUVERABILITY.

VARIOUS TYPES OF WATERCOOLED ENGINES WERE INSTALLED INCLUDING 200 H.P. WARSKALOWSKI.

THE AIRPLANE LANDING GEAR COULD BE INTERCHANGED FOR SKIS FOR WINTER OPERATIONS.

THERE WERE SEVERAL VERSIONS OF THIS AIRPLANE ALL DIFFERING IN MINOR DETAILS OF CONSTRUCTION OR ENGINE INSTALLATION.

THE HIGH SPEED WAS 96 M.P.H. AND THE RANGE ABOUT 325 MILES IN STILL AIR.

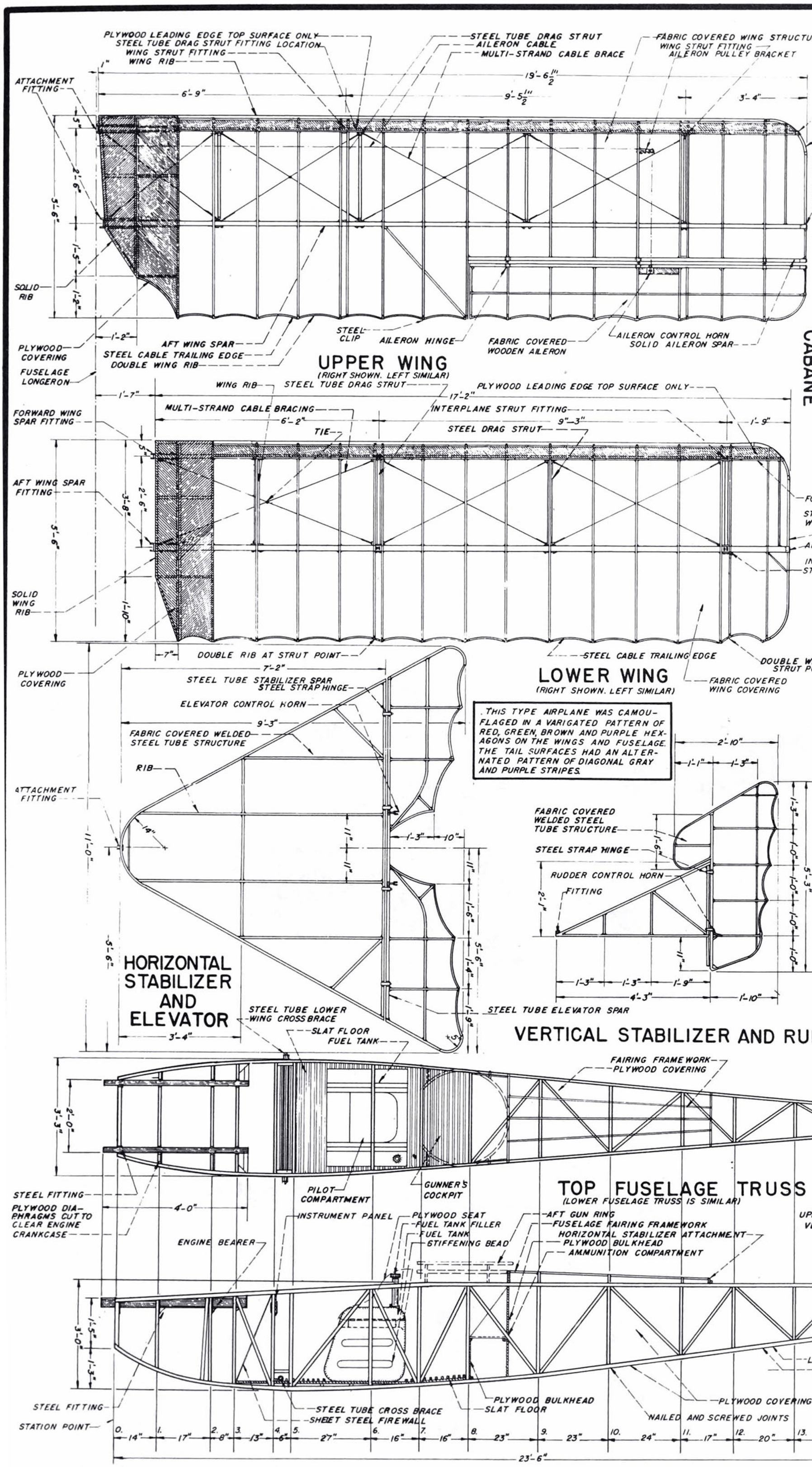
PLYWOOD LEADING EDGE TOP SURFACE ONLY
STEEL TUBE DRAG STRUT FITTING LOCATION
WING STRUT FITTING
WING RIB
STEEL TUBE DRAG STRUT
AILERON CABLE
MULTI-STRAND CABLE BRACE
FABRIC COVERED WING STRUCTURE
WING STRUT FITTING
AILERON PULLEY BRACKET
STEEL TUBE WING TIP
FORWARD SPAR
SPAR CLIP
ATTACHMENT FITTING
SOLID RIB
PLYWOOD COVERING
FUSELAGE LONGERON
AFT WING SPAR
STEEL CABLE TRAILING EDGE
DOUBLE WING RIB
STEEL CLIP
AILERON HINGE
FABRIC COVERED WOODEN AILERON
AILERON CONTROL HORN
SOLID AILERON SPAR
UPPER WING
(RIGHT SHOWN. LEFT SIMILAR)
WING RIB
STEEL TUBE DRAG STRUT
PLYWOOD LEADING EDGE TOP SURFACE ONLY
MULTI-STRAND CABLE BRACING
INTERPLANE STRUT FITTING
FORWARD WING SPAR FITTING
TIE
STEEL DRAG STRUT
AFT WING SPAR FITTING
SOLID WING RIB
FORWARD SPAR
STEEL TUBE WING TIP
AFT SPAR
INTERPLANE STRUT FITTING
DOUBLE RIB AT STRUT POINT
STEEL CABLE TRAILING EDGE
DOUBLE WING RIB AT STRUT POINT
FABRIC COVERED WING COVERING
LOWER WING
(RIGHT SHOWN. LEFT SIMILAR)
PLYWOOD COVERING
STEEL TUBE STABILIZER SPAR
STEEL STRAP HINGE
ELEVATOR CONTROL HORN
FABRIC COVERED WELDED STEEL TUBE STRUCTURE
RIB
ATTACHMENT FITTING
HORIZONTAL STABILIZER AND ELEVATOR
STEEL TUBE LOWER WING CROSS BRACE
SLAT FLOOR FUEL TANK
. THIS TYPE AIRPLANE WAS CAMOUFLAGED IN A VARIGATED PATTERN OF RED, GREEN, BROWN AND PURPLE HEXAGONS ON THE WINGS AND FUSELAGE. THE TAIL SURFACES HAD AN ALTERNATED PATTERN OF DIAGONAL GRAY AND PURPLE STRIPES.
FABRIC COVERED WELDED STEEL TUBE STRUCTURE
STEEL STRAP HINGE
RUDDER CONTROL HORN
FITTING
STEEL TUBE ELEVATOR SPAR
VERTICAL STABILIZER AND RUDDER
FAIRING FRAMEWORK
PLYWOOD COVERING
TAIL SKID SUPPORT
STEEL FITTING
PLYWOOD DIAPHRAGMS CUT TO CLEAR ENGINE CRANKCASE
PILOT COMPARTMENT
GUNNER'S COCKPIT
ENGINE BEARER
INSTRUMENT PANEL
PLYWOOD SEAT
FUEL TANK FILLER
FUEL TANK
STIFFENING BEAD
AFT GUN RING
FUSELAGE FAIRING FRAMEWORK
HORIZONTAL STABILIZER ATTACHMENT
PLYWOOD BULKHEAD
AMMUNITION COMPARTMENT
UPPER LONGEON
VERTICAL STRUT
TAIL POST
LOWER LONGERON
LOWER STRUT BRACING SAME AS THE TOP
TAIL SKID SUPPORT
STEEL TUBE CROSS BRACE
SHEET STEEL FIREWALL
PLYWOOD BULKHEAD
SLAT FLOOR
NAILED AND SCREWED JOINTS
PLYWOOD COVERING
STATION POINT
0. 14" 1. 17" 2. 8" 3. 13" 4. 6" 5. 27" 6. 16" 7. 16" 8. 23" 9. 23" 10. 24" 11. 17" 12. 20" 13. 17" 14. 17" 15. 24" 16.
23'-6"
SIDE FUSELAGE TRUSS
CABANE
RIVETED AND WELDED CORNER BRACE AND WING FITTING
STEEL CLIP
WEB STIFFENER
AFT SPAR LOWER CAP STRIP
FAIRING
FUSELAGE FITTING
SYNTHETIC RUBBER HIGH PRESSURE TIRE
FORE AND AFT BRACE CABLE
STEP
PLYWOOD (TOP SURFACE ONLY)
FORWARD SPAR
PLYWOOD WEB
SOLID LEADING EDGE
FAIRED SPREADER TUBE
RUBBER SHOCK CORD
LANDING GEAR
FAIRED STEEL STRUT
TIE WIRE SPOKE WHEEL FAIRED WITH FABRIC
FUSELAGE FITTING
5'-10"
17"
FOOT STEP
CABLE BRACE FITTING
FAIRED STEEL STRUT
CABANE
M.G. MOUNT
UPPER WING
FRONT VIEW
MOUNTING QUADRANT
WATER COOLED MACHINE GUN CARTRIDGE MAGAZINE
SERVICE FUEL TANK
AILERON HORN
FIXED MACHINE GUN
(UPPER WING)
TYPICAL WING RIB
GUSSET
LOWER CAP STRIP
SPRUCE CAP STRIP CUTOUT
PLYWOOD WEB STIFFENER
THE FABRIC WAS OF COTTON OF AVERAGE GRADE. IT WAS STITCHED TO EACH RIB WITH LINEN THREAD AND EACH LINE OF STITCHES WAS COVERED WITH DOPED TAPE.
WING RIBS WERE NAILED AND GLUED
TRAILING EDGE WAS FLEXIBLE.
CONVENTIONAL WATER COOLED MACHINE GUN WAS MOUNTED ON UPPER WING. IT WAS FIRED BY A LANYARD OPERATED BY PILOT. IT WAS NOT SYNCHRONIZED. IT WAS MOUNTED ABOVE THE PROPELLER.

Hansa-Brandenburg W.29

drawings by TAGE LARSEN

ERNST Heinkel designed the W.29 for the Brandenburg factory in 1918. It was used on the North Sea, its most famous pilot being Oberleutenant Christiensen. It was later built in Denmark and served several countries in modified forms almost until WW II.

One Brandenburg seaplane, the later W.33, is being restored in Finland. □

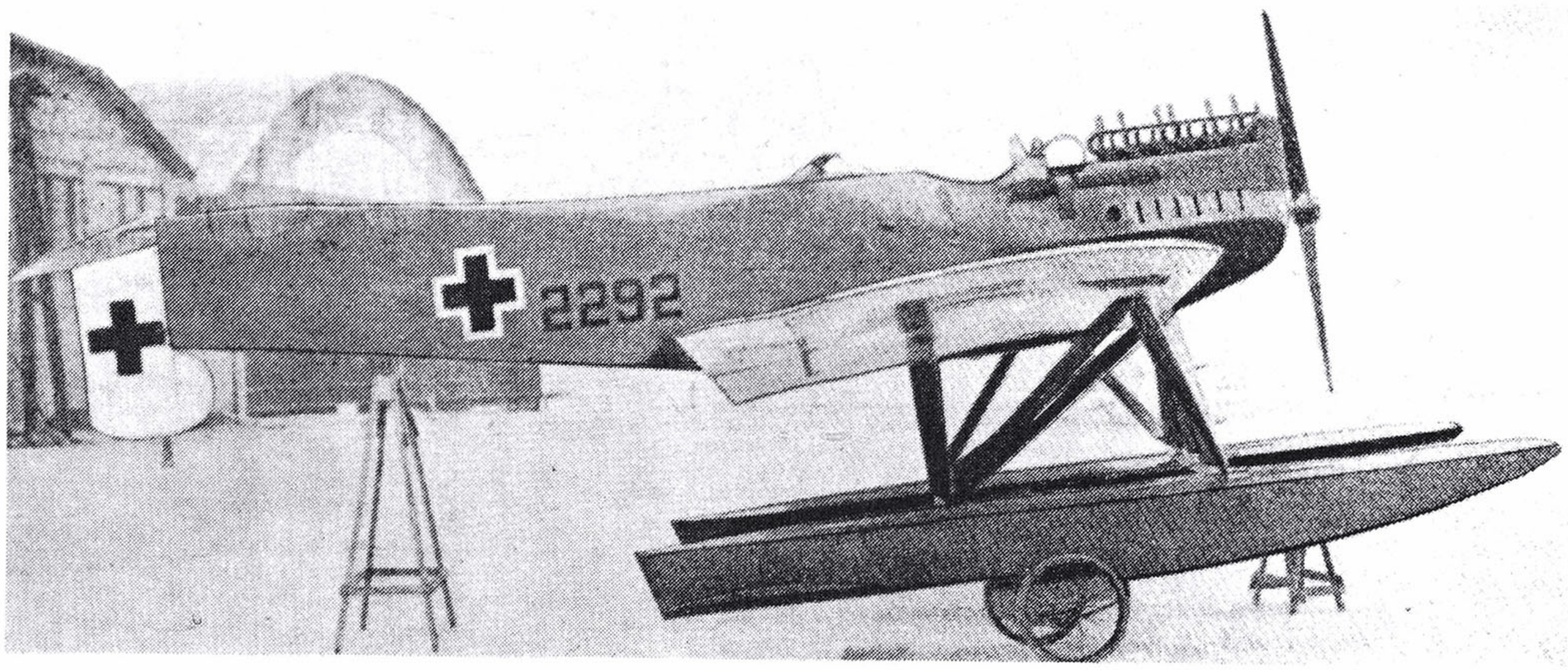

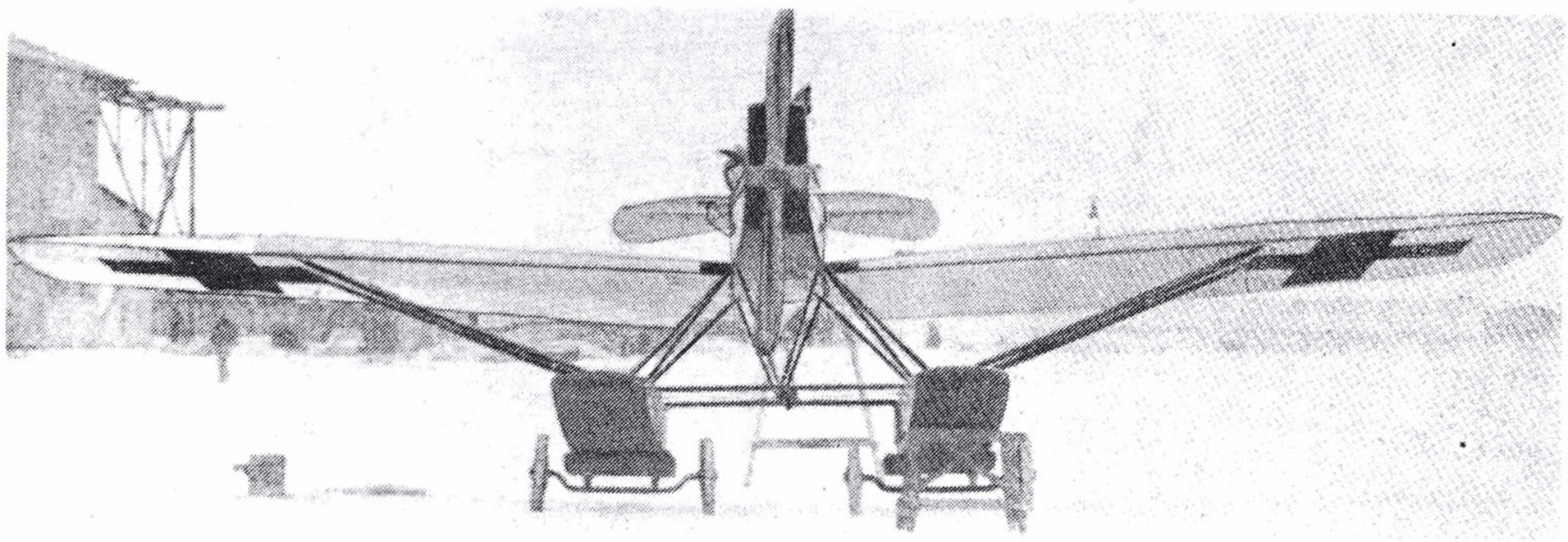

The Hansa-Brandenburg W.29 had several unique design features for its time. The structure was almost entirely from wood and explored the cantilever concept. "Jane's History of Aviation" photo.

30'-6"
9.350

EAR.
POW Y
A 6-CYL. BENZ
ENGINE.

BENZ ENGINES RATED AT 150, 185 AND 195 HP WERE USED IN GERMAN BRANDENBURGERS.

SHORT EXHAUST STUBS

LONG MANIFOLD

A

AUXILIARY FUEL TANK ON DANISH PLANES FROM 1925

FOOT STEPS

18'-7"
5 660

DANISH ROUNDELS ON UPPER WING SURFACES

B

MOVABLE 7.9 MM PARABELLUM GUN

TOP VIEW OF FLOAT

WATERTIGHT INSPECTION DOORS

C

2292

GERMAN W.29'S WERE DARK GREY ALL OVER EXCEPT FOR THE RUDDER, WHICH WAS WHITE. BLACK NUMERALS AND BLACK CROSSES OUTLINED IN WHITE. (MARKINGS VARIED CONSIDERABLY)

WING WALK (BOTH WINGS)

M

EMPTY WEIGHT	2.200 LBS	
" "	998 KG	
LOADED WEIGHT	3.285 LBS	
" "	1.490 KG	

TOP SPED	103 MPH	165 KM/H
CRUISING	87 "	140 "
LANDING	47 "	75 "
RANGE	326 MLS	525 KM

D

O

N

N

E

GERMAN MARKINGS IN SAME POSITION ABOVE AND BELOW WING.

M

N

Hansa - Brandenburg
W.29 (H.M.I)

Tage

DETACHABLE WIND SCREEN FOR OBSERVER'S SEAT INTRODUCED 1925

29

(F)

ONE OF 15 W.29'S BUILT BY THE NAVAL DOCKYARD OF COPENHAGEN, DENMARK. ALSO THE 160 HP ENGINE WAS DESIGNED AND BUILT BY THE DOCKYARD (ORLOGS VAERFTET).

GERMAN AND EARLY DANISH W.29'S HAD SIX INDIVIDUAL EXHAUST STUBS. DANISH PLANES LATER CHANGED TO LONG MANIFOLDS.

FIXED ARMAMENT ON GERMAN W.29'S CONSISTED OF TWO 7.9 MM SPANDAU GUNS, ONE ON EACH SIDE OF THE FORWARD FUSELAGE. THE REAR SEAT GUNNER OPERATED A MOVABLE 7.9 MM PARABELLUM GUN.

DANISH W.29'S WERE ARMED WITH A FIXED SYNCHRONIZED 7.9 MM VICKERS GUN AND ONE OR TWO RING-MOUNTED DANISH DISA (MADSEN) GUNS IN THE REAR SEAT.

INSPECTION DOOR

11'-11" 3.620

8'-11" 2.700

WINDOW IN FLOOR UNDER OBSERVER / GUNNER'S COMPARTMENT.

FOOT STEPS

PERSISTANT STABILITY PROBLEMS WERE FINALLY OVERCOME BY INTRODUCING LARGER ELEVATORS IN 1925.

9'-4" 2.840

WOODEN O.V. PROPELLER WITH BRASS REINFORCED TIPS. BENZ ENGINE TURNED OPPOSITE WAY ROUND

DANISH PLANES WERE ORIGINALLY PAINTED DARK GREY ALL OVER WITH WHITE NUMBERS, BUT LATER CHANGED TO SILVER WITH BLACK NUMBERS. RED-WHITE FLAGS & ROUNDELS

VICKERS GUN
RADIATOR
WING WALK (CORRUGATED ALUMINUM)
MANIFOLD
FOOT STEP
PITOT TUBE
AUX. TANK

SPAN 44'-4" — " — 13.510

FEET 0 1 2 3 4 5 6 7 8 9 10 11 12 13 14

METRES 0 1 2 3

Junkers D.I

drawing by CHARLES GRAHAM

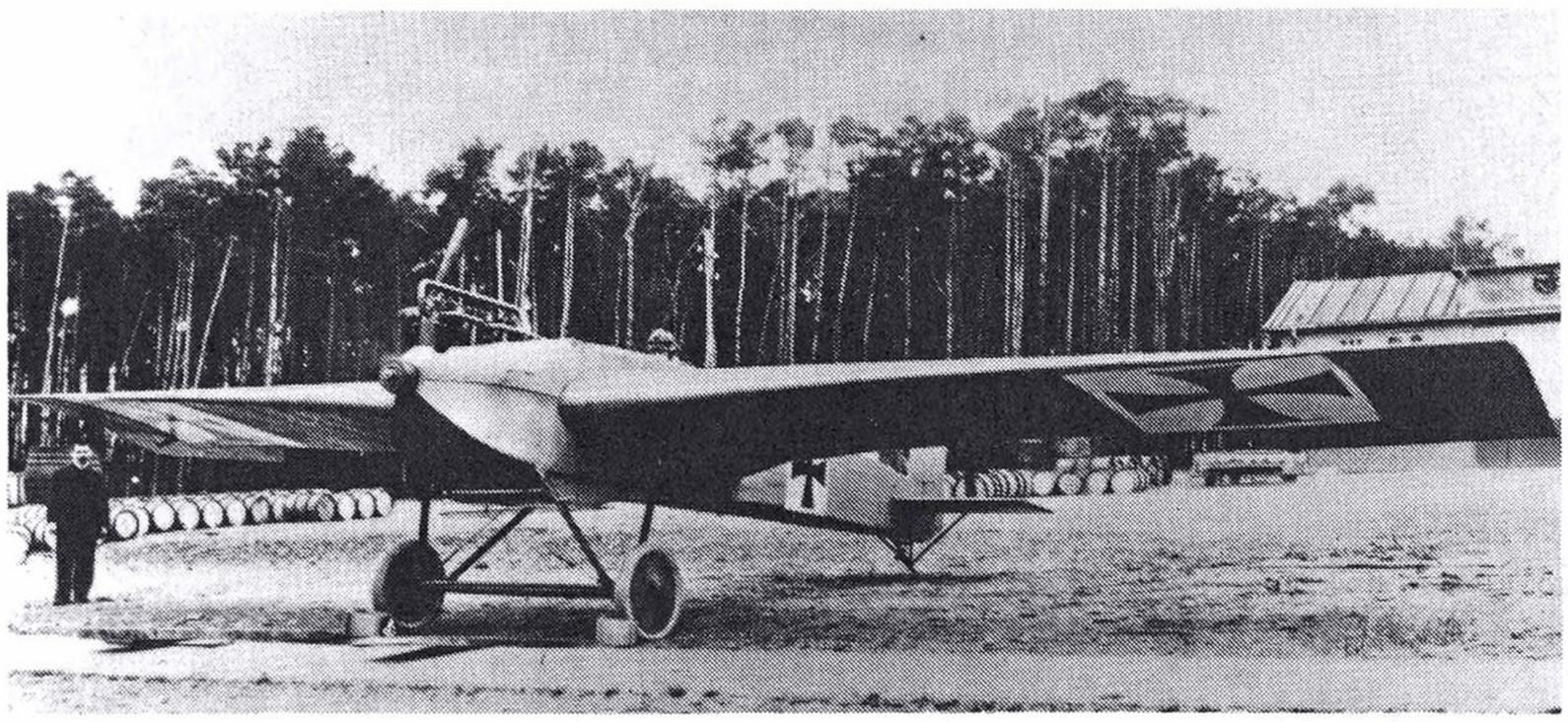

Junkers first design, the J 1, paved the way to success for the firm.

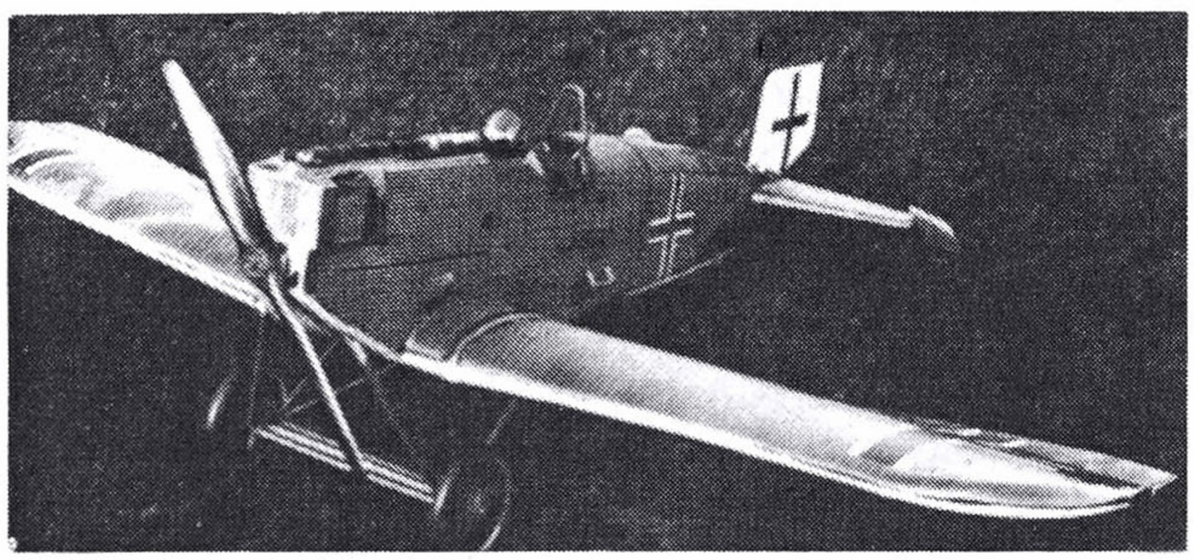

The Junkers D.1, above and below, was all-metal with full cantilever wings. "Jane's Encyclopedia of the World's Aircraft" photo.

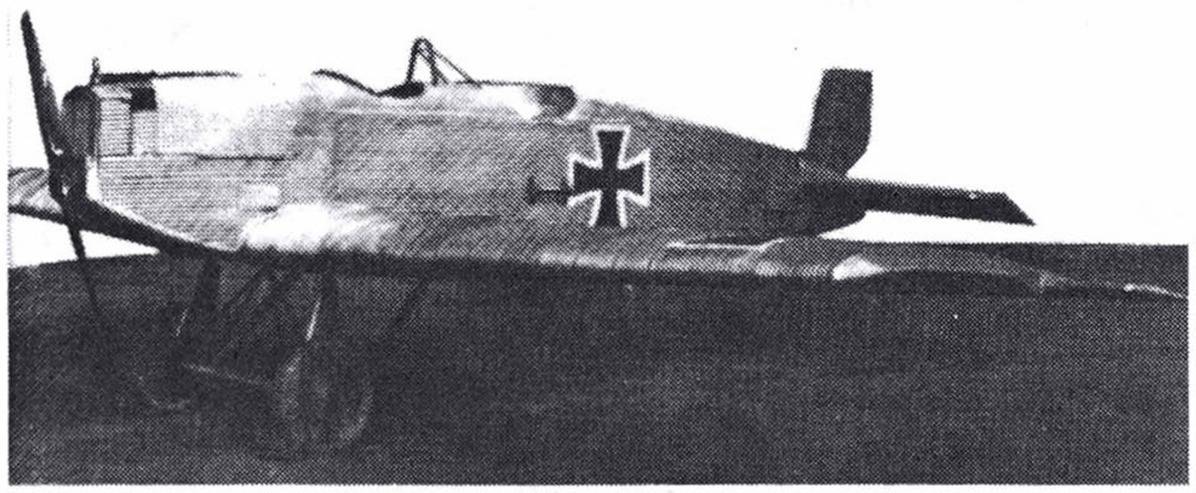

THE FIRST JUNKERS factory design was the J 1 (Army designation E.I); it was known as The Tin Donkey, and only one was built. The 9th Junkers design, the J 9, appeared in October 1917, and with its 160 hp Mercedes was entered in the fighter competitions of 1918. The Army ordered it built as the D.I. Armament consisted of a pair of fixed, forward-firing Spandau guns ahead of the cockpit.

Because of lack of experience with the aircraft's then-unconventional metal construction, only forty-one D.1s were completed and delivered to the Front before the Armistice in November 1918. The aircraft featured a number of unique innovations, one of which was a full cantilever wing.

Four Junkers all-metal monoplanes of the WW I period survive in museums. □

This extraordinary aircraft was to WWI what the Me 262 was to WWII. So advanced were the construction details and general configuration that other designers were 10 to 15 years catching up. Only 41 were built & little is known of the D-1's combat record, but it's innovations were an influence to the end of propeller driven fighter plane design.

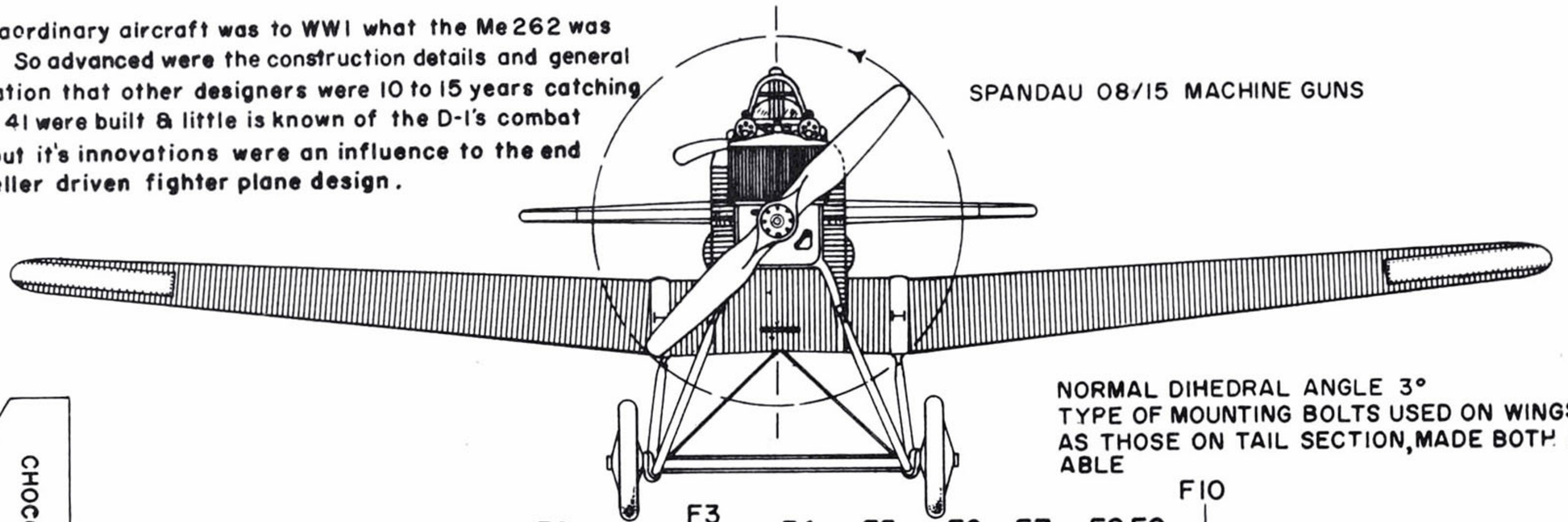

NORMAL DIHEDRAL ANGLE 3°
TYPE OF MOUNTING BOLTS USED ON WINGS, AS WELL AS THOSE ON TAIL SECTION, MADE BOTH ADJUSTABLE

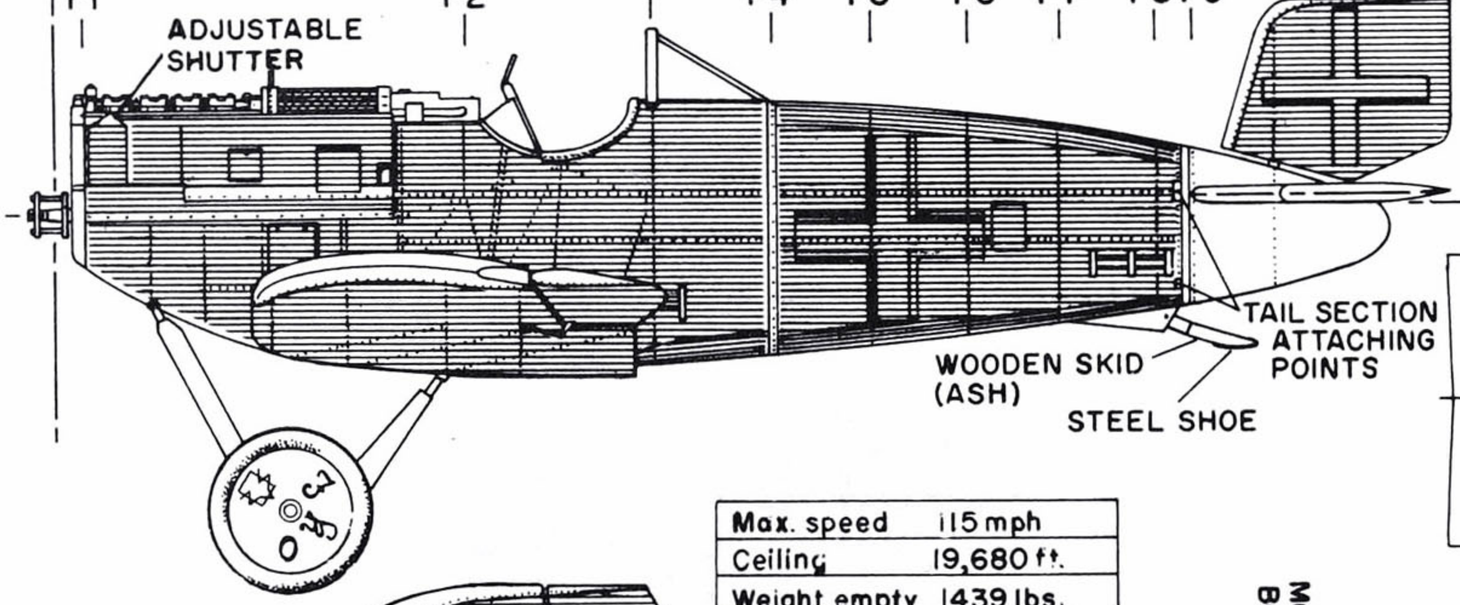

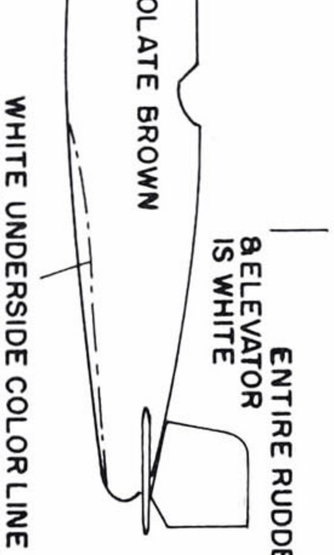

Max. speed	115 mph
Ceiling	19,680 ft.
Weight empty	1439 lbs.
" gross	1841 "
Time/Ht.	5.8/6500
	9.8/9800
	14.8/13,100
	22.17/16,400

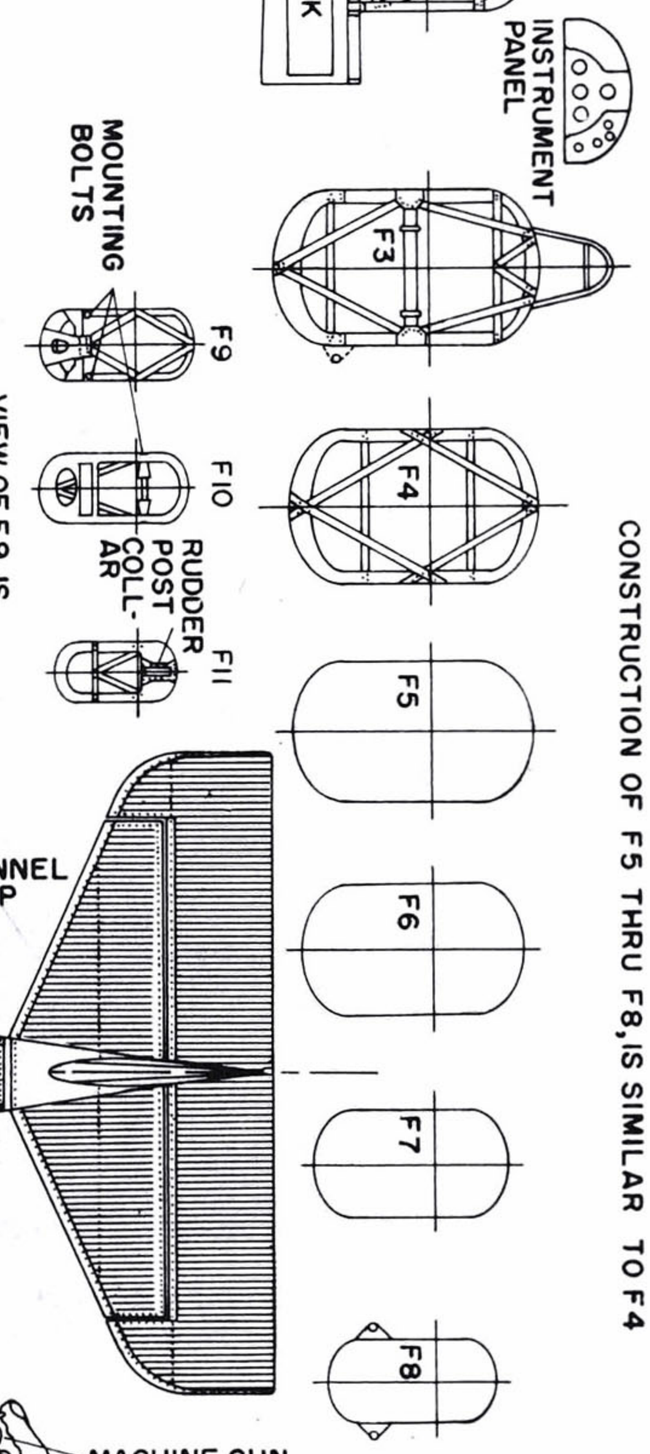



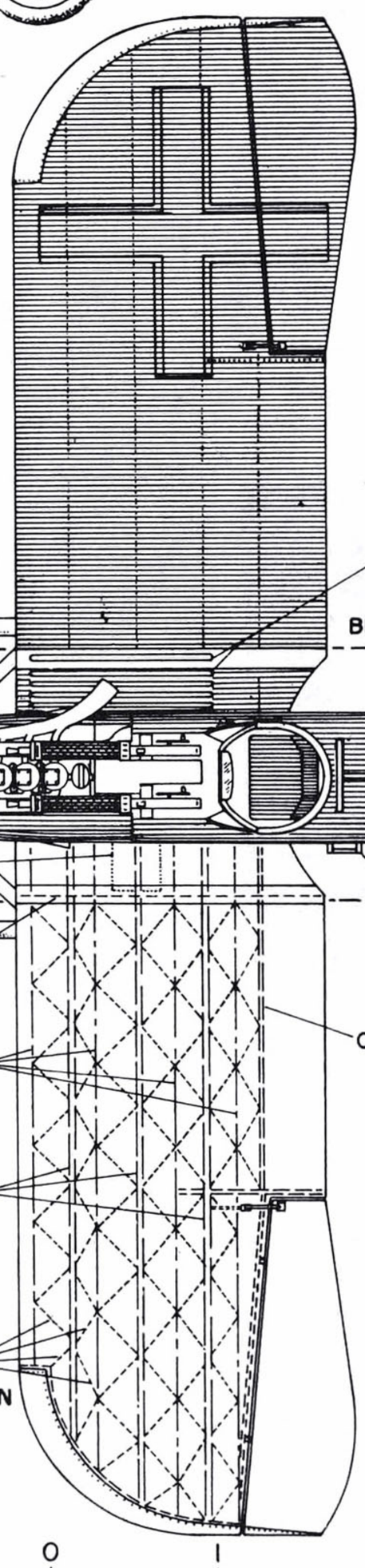

For more info on the engine see M.A.N. Aug.'48, for Wylam's plans of the Mecedes F-1466D3A

0 1 2 METERS 3
0 5 FEET 10

Junkers D-1. 1918

Drawn by C. Graham
Engine: 180 h.p. Mercedes
Designed by: Prof. Hugo Junkers

Loening M-8

drawings by TOM STARK

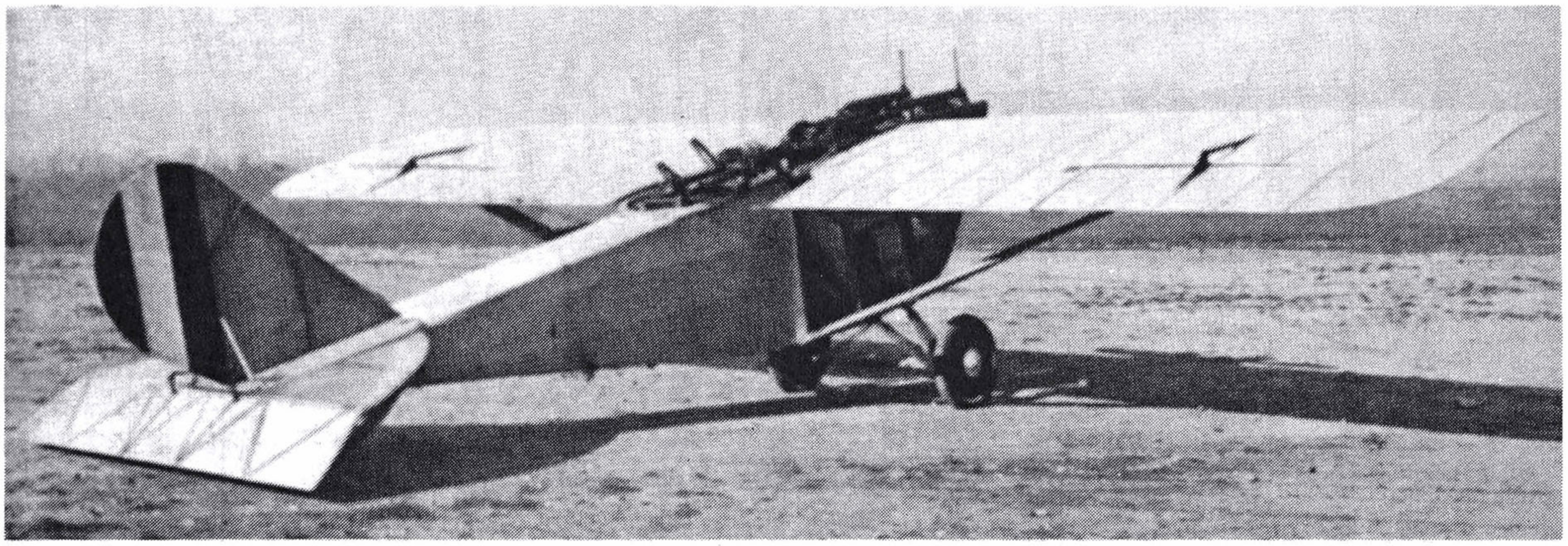

Although too late to see action in WW I, the Loening M-8 was to establish several world aviation records. "Jane's All the World's Aircraft" photo.

THE LOENING M-8 was described by Grover Loening as "nearer to being inspired than anything I ever did." While its pot-bellied appearance may be anything but inspired by modern standards, when it was designed it represented quite an advancement over the biplanes that dominated that era. It pioneered the strut-braced high-wing configuration and the use of lifting struts that characterized so many commercial airplanes a few years later, including Lindberg's Ryan NYP.

The M-8 was designed near the close of World War I and grew out of America's desire to contribute first line fighting airplanes to the war. The American aircraft industry had not been able to develop and build combat airplanes, and our pilots flew French and British designs in combat. The two-place Bristol Fighter served as the model for the M-8, but was a model in capability and characteristics only, since the M-8 had another requirement—ease of rapid manufacture. In this it succeeded very well, having only one-fifth the number of fittings and requiring only one-fourth the manufacturing time as the Bristol. In addition, it weighed 500 pounds less than the Bristol while carrying the same military load, but at a speed 30 mph faster.



Lifting strut wing braces designed for the M-8 were a breakthrough that has been carried over into lightplane designs of current manufacturing.

By the time the prototype was flying, the Armistice was signed and plans to build 5,000 M-8s were dropped. Only two were built for the Army and four for the Navy, and they served as engine testbeds, racing planes, and research vehicles. In December 1918, one broke the world's altitude record for carrying one and two passengers.

None survive. □

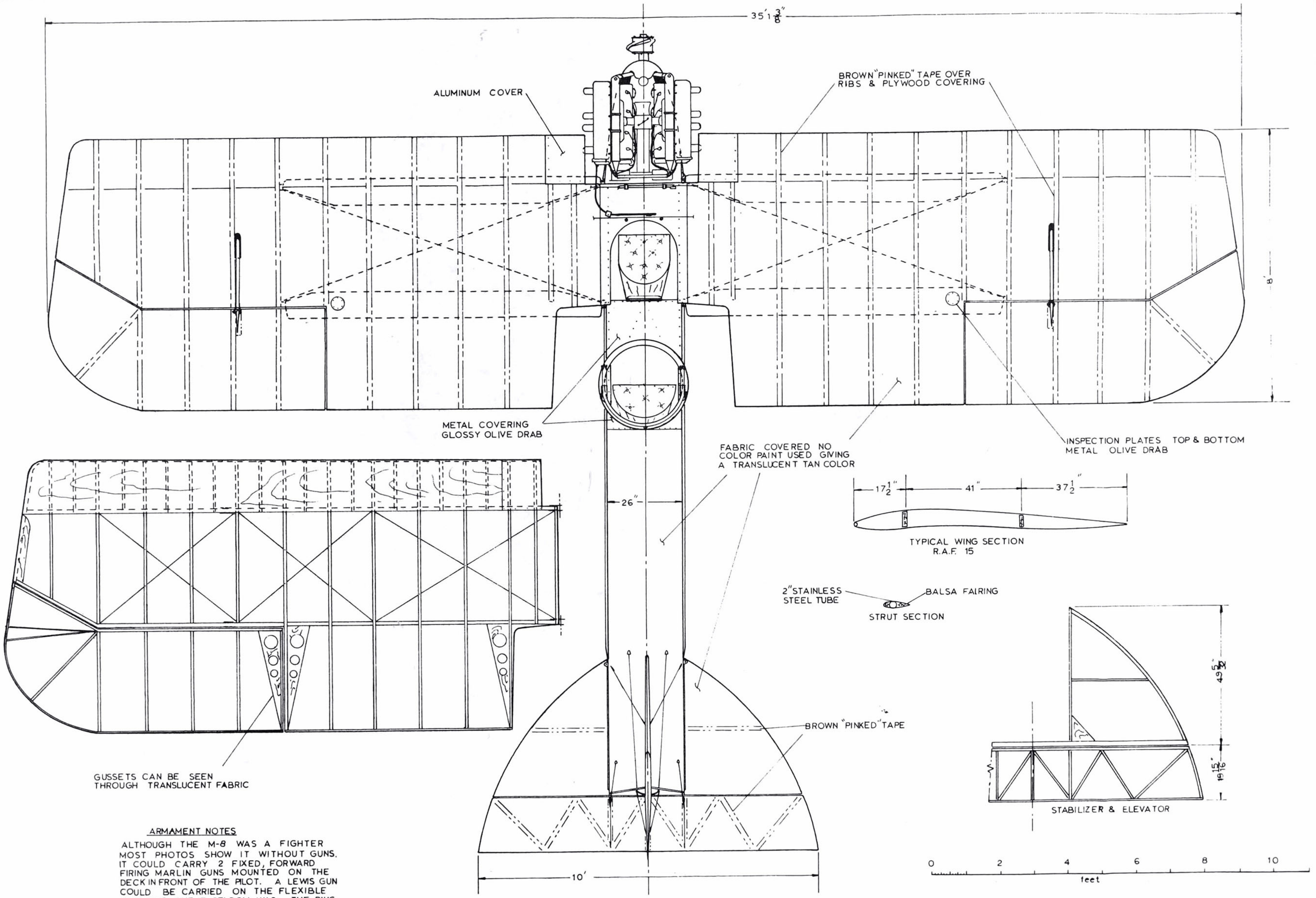

ARMAMENT NOTES

ALTHOUGH THE M-8 WAS A FIGHTER MOST PHOTOS SHOW IT WITHOUT GUNS. IT COULD CARRY 2 FIXED, FORWARD FIRING MARLIN GUNS MOUNTED ON THE DECK IN FRONT OF THE PILOT. A LEWIS GUN COULD BE CARRIED ON THE FLEXIBLE GUN RING BUT IT SELDOM WAS. THE RING WAS ALWAYS MOUNTED FOR BALANCE.

LOENING M-8's ALSO CALLED WRIGHT-MARTIN M-8's WERE BUILT IN LIMITED NUMBERS FOR THE ARMY AND NAVY. THERE WERE VARIATIONS BETWEEN INDIVIDUAL AIRPLANES AND AIRPLANES UNDERWENT MODIFICATIONS IN SERVICE. VISIBLE VARIATIONS WERE: WING TIP SHAPE, ROOT CUT-OUT, SPAN, CHORD, OVERALL COLOR SCHEME, WINDOWS, COWL DETAILS, AND CONTROL CABLE RUNS. DRAWING IS ARMY M-8 AS IT WAS WHEN PHOTOS USAF NEG. #'s 1777 THRU 1780 WERE TAKEN.

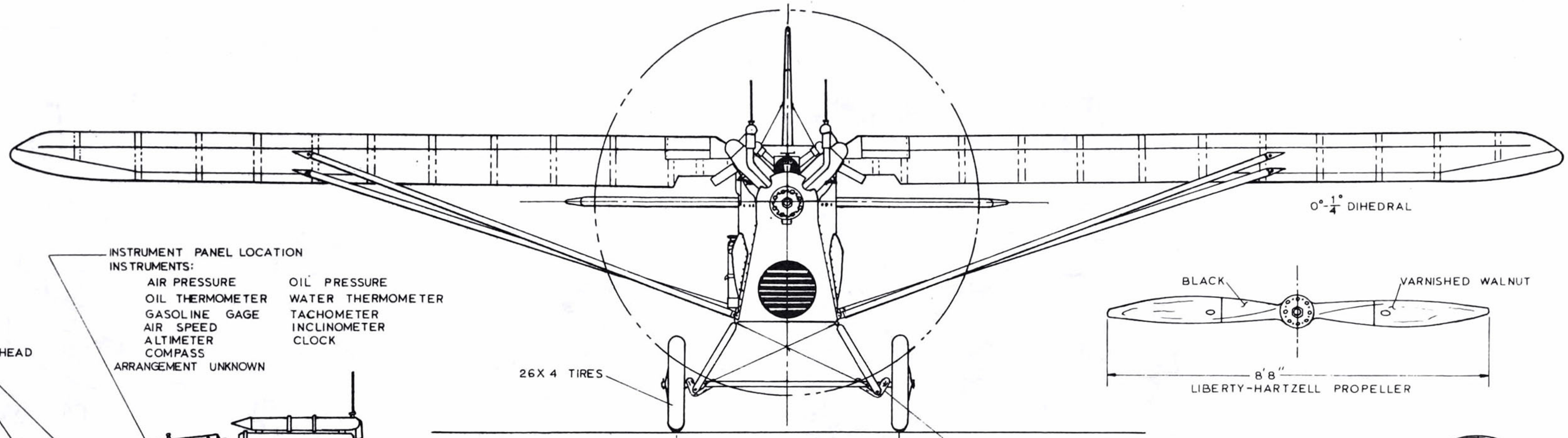

INSTRUMENT PANEL LOCATION
INSTRUMENTS:

AIR PRESSURE	OIL PRESSURE
OIL THERMOMETER	WATER THERMOMETER
GASOLINE GAGE	TACHOMETER
AIR SPEED	INCLINOMETER
ALTIMETER	CLOCK
COMPASS	

ARRANGEMENT UNKNOWN

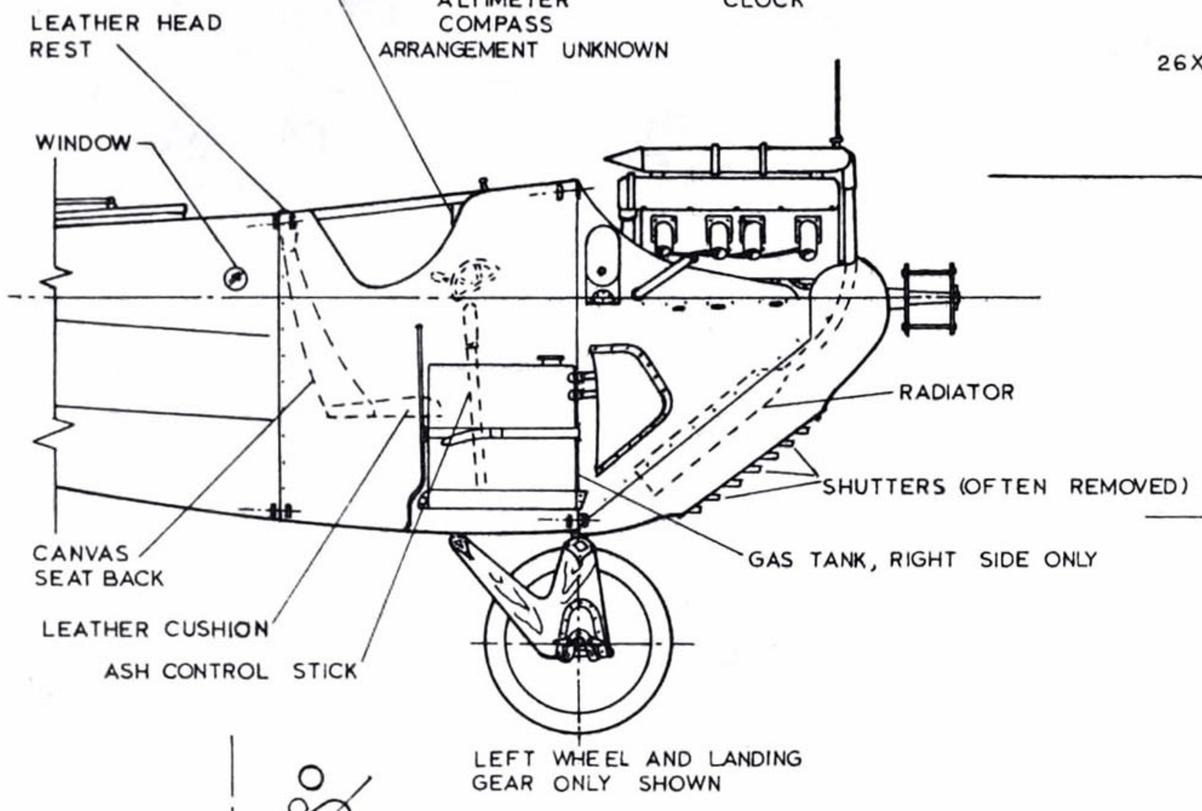

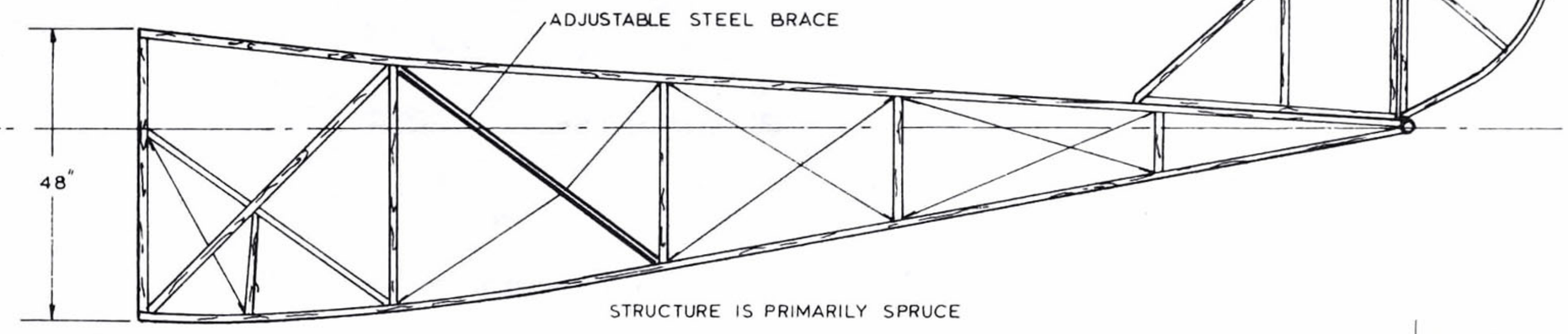

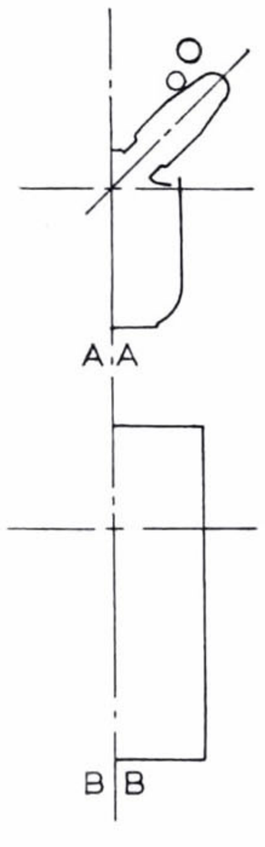

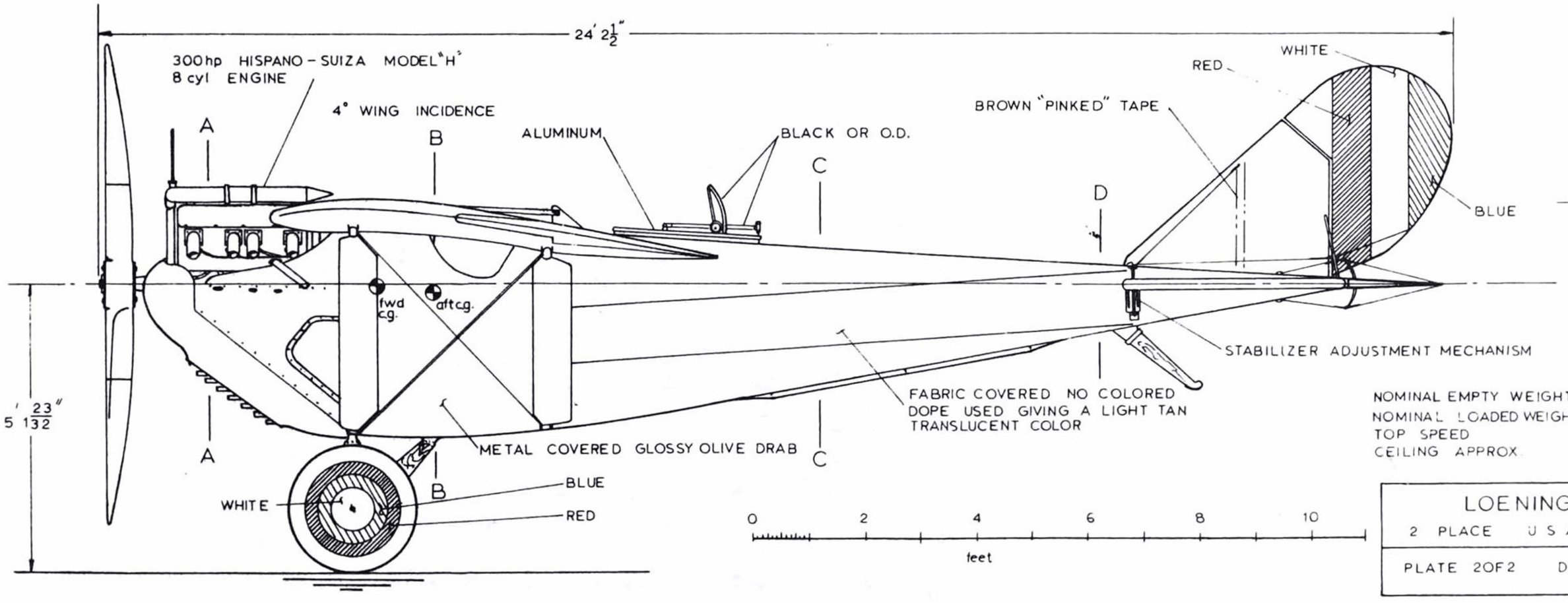

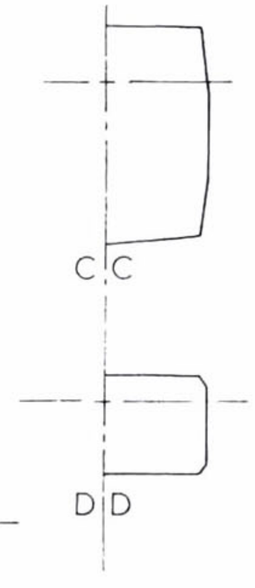

NOMINAL EMPTY WEIGHT	1660 #
NOMINAL LOADED WEIGHT	2600 #
TOP SPEED	145 mph
CEILING APPROX.	20,000 ft.

LOENING M-8
2 PLACE U S ARMY FIGHTER 1918
PLATE 2OF2 DRAWN BY [illegible] 28 DEC. 69

Nieuport Nighthawk

drawings by JOSEPH NIETO

THE BRITISH Nieuport Nighthawk was chosen for mass production by the Royal Air Force because of its remarkable performance and because it had been designed to use many S.E.5 parts. It also met the strength requirements as demonstrated by load tests throughout the entire machine. The general arrangements regarding position and accessibility of guns, instruments, etc., provided the facilities most suitable to combat conditions, aided by a minimum "blind" area. Intended for quick mass production of a "knock-out-punch" fighter to finish up the war, it was a bit late for front line service before the armistice. The Nighthawk was fully capable of carrying on for the RAF where the S.E.5 and Snipe had left off. As the RAF's first truly modern radial-powered production airplane, the Nighthawk was powered by a 9-cylinder 320-hp A.B.C. Dragonfly air-cooled engine, giving it a climb rate of 1,500 fpm and a top speed of 151 mph.

Built by Nieuport and the General Aircraft Co. Ltd. of Cricklewood, London, it was designed by H.P. Folland, formerly of the Royal Aircraft Factory.

The nearest thing to a surviving Nighthawk is one of the existing seven S.E.5a's. □

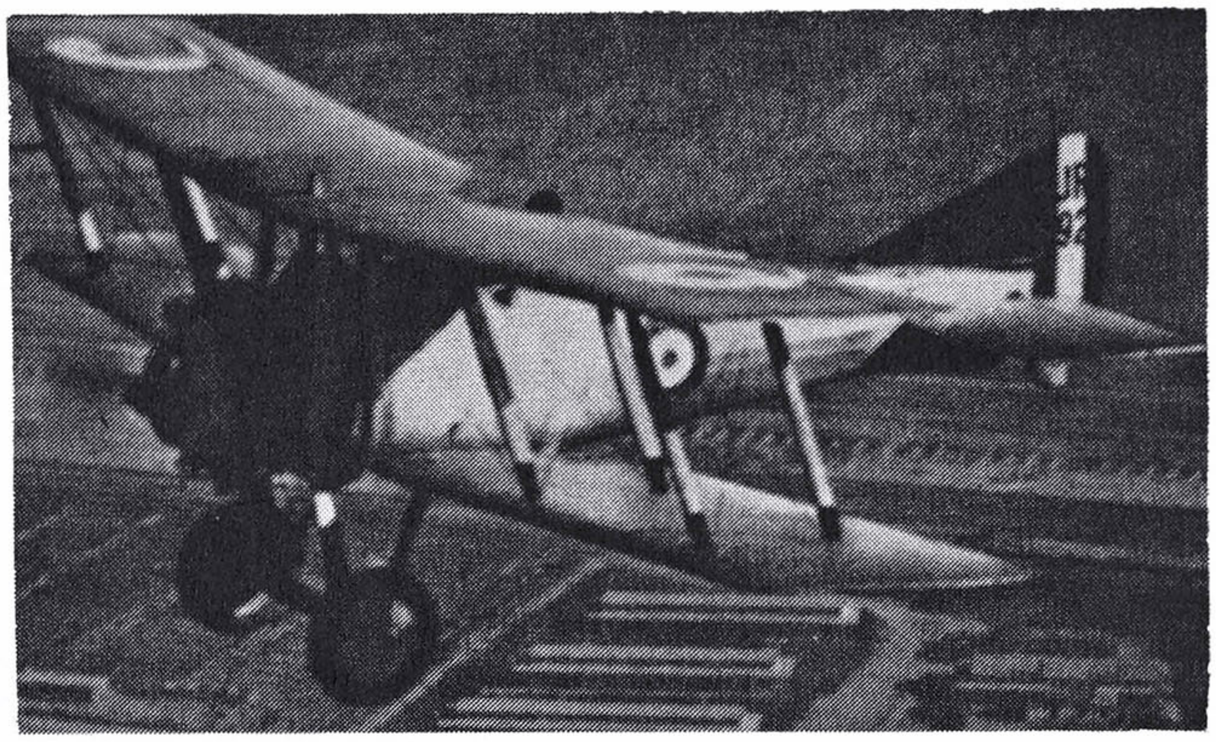

Too late to see service in WW I, the Nieuport Nighthawk carried British fighter pilots for nearly a decade, almost into WW II. "Aircraft of the Royal Air Force, 1918-1957" photo.

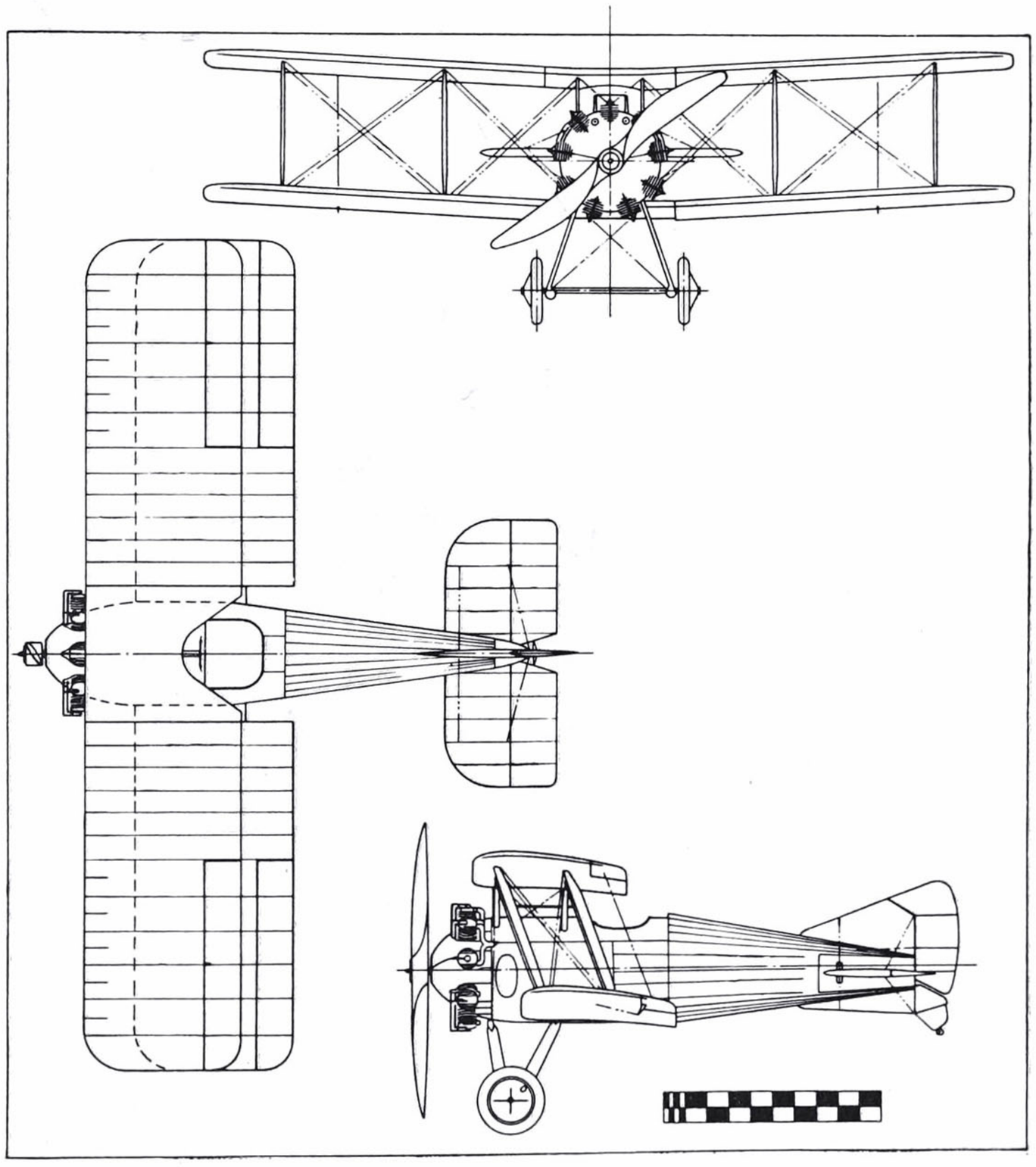

AIR AGE INC. 551 FIFTH AVE., NEW YORK, 17, N.Y.

SCALE: 1'-1"-0" | GENERAL ARRANGEMENTS & CONSTRUCTIONAL DETAILS. BRITAIN'S 1918 R.A.F. NIEUPORT-

FULL SIZE: 1'-0" | COPYRIGHT BY: Joseph Nieto.

Nighthawk.

B-B

A-A

C-C

~FUSELAGE SECTION OUTLINES~

LINEN TAPE, ½" WIDE WAS GLUED OVER ENDS OF RIBS & FLAP SPAR. APPLIED TO ALL RIBS ENDING AT FLAP SPAR.

FAIRING WAS FITTED AFTER FABRIC WAS PUT ON.

FAIRING STRIP TO BUTT UP AGAINST RIB AS SHOWN.

FAIRING STRIP GLUED & SCREWED TO SPAR.

SECTION ON LINE X, Y.

DRAIN EYELETS ON UNDER SURFACE ONLY, ALONG TRAILING EDGE, BOTH WINGS.

℄ OF WING PANEL HINGE.

AILERON CONTROL CABLE & SHAFT.

LOWER WING PANEL OUTLINE. (REF.)

11'-9"

AILERON HINGE ℄

4'-9.8"

(X) (Y)

9.8" 13" 6.5" | 8.7" 8.7" 9.1" 7.2" 7.4" 9.0" 9.2" 9.8" 9.8" 9.8"

2'-11.8" | 2'-9.25" | 2'-8.8" | 20.7" | 19.65"

5'-5.8" | 3'-3.35"

℄ OUTER STRUTS. ℄ INNER STRUTS.

SCARF JOINT, GLUED AND SCREWED, THEN WAS BOUND WITH CORD, AND VARNISHED.

CHORD LATHS WERE GLUED & SCREWED TO RIBS.

STRINGERS WERE GLUED AND BRADDED TO CHOCKS ON ALL RIBS.

SCARF JOINT.

SECTION SHOWING JOINTS IN FLANGES OF RIBS BETWEEN JOINTS A, B, & C, D.

12" 11½" 11½" 12½"

℄ SHIP. VERTICAL FIN. (REF.)

6" 5½" 5½" 5½" 5½"

2'-4" 3'-9"

FOREMOST POINT, SHIP. (REF.)

CENTER SECTION. (REF.)

19½"

℄ UPPER & LOWER SPARS.

19½" STAGGER.

CHORD. 5'-3" (BOTH WINGS.)

LOWER WING PANEL. (REF.)

DETAIL ②

DETAIL ③

17.2" 12.75" 8.75"

℄ THRUST.

3'-7.15" 2'-1.95" 7.2" 11.35"

ALUMIN. ALLOY. WOOD

2.5"

STABILIZER. (REF.)

TOP, SIDE & BOTTOM STRINGERS NOT SHOWN, FOR CLARITY.

B B C C A A

SHOCK CORDS.

FOREMOST POINT OF SHIP. (REF.)

DETAIL ①

TAPE

DETAIL ⑤

PRESSED PLATE FITTING.

ENDS OF D, BEADED THROUGH F.

WASHER BRAZED TO RIVET D.

TAPE

DETAIL ④

OVERALL LENGTH. 18'-6"

7 GAL. GRAV. FUEL TANK IN C.C.

4 GAL. OIL TANK IN NOSE.

2'-4½"

4'-6"

STABILIZER WAS ADJUSTABLE IN AIR.

ONE INTAKE VALVE.

EXHAUST PORT ON EACH SIDE. "STACKS" NOT SHOWN.

TWO EXHAUST VALVES, OPERATED FROM ONE CAMSHAFT.

MAX. HEIGHT. 9'-3"

℄ ENGINE

GENERATOR.

TAPE.

26×4 TYRE.

13"

3'-1½" 13'5"

MAIN PETROL, PORT SIDE, BETWEEN FUSELAGE FRAME & BODY SIDE, 16½ GALS. SIMILAR TANK, IN SAME POSITION ON STARBOARD SIDE, ALSO 16½ GALS.

STEEL SHOE

BLUE WHITE RED

THE COLOR SCHEME OF THE NIEUPORT NIGHTHAWK, APPEARS TO HAVE BEEN MUCH THE SAME AS THE SE-5, SOPWITH SNIPE, AND OTHER LAND-BASED BRITISH PURSUITS OF 1918. THE FUSELAGE, TAIL, LANDING GEAR & UPPER WING SURFACES & STRUTS, OLIVE-DRAB (KHAKI.) SURFACES BENEATH WINGS & TAIL, EITHER LIGHT-IVORY OR VERY LIGHT SKY BLUE. OTHER COLORS, AS NOTED.

ILLUSTRATED BY DETAILS 1 TO 5 AT RIGHT, IS THE UNIQUE METHOD CHARACTERIZING THE UNITING OF WOOD TO WOOD & METAL TO WOOD IN THE FUSELAGE OF THE NIEUP. NIGHTHAWK. USING A PRESSED PLATE FITTING WITH FIVE STAY-WIRE ANCHORAGES, A FLANGED TUBE D AND WASHER E, ARE BRAZED TO IT TO FACILITATE ASSEMBLY. LONGERON A, IS DRILLED TO RECEIVE TUBE D, THE END OF WHICH WHEN PASSED THRU' WASHER F, IS BEADED OVER AS AT G. CROSS-BAR C, IS HELD BETWEEN PRESSED FITTING & WASHER F BY TUBULAR RIVET J, STRUT B, IT'S END BOUND BY TAPE, IS FIXED IN POSITION BY HOLE DRILLED TO RECEIVE WOOD PEG H, DRIVEN DOWN THRU' BORE OF TUBE RIVET D.

The British Nieuport "Night Hawk" Fighting Scout Of World War I, Is From Several Points Of View, A Particularly Interesting Subject Of Aircraft Study. Having Been The Latest Type Fighter Chosen For Mass Production By The Royal Air Force Before The Armistice, It Was The First Airplane Specification Issued By The R.A.F. In 1918. Most Compelling Reasons For The Night Hawk's Selection Were, That It's Very Remarkable Performance Full Filled R.A.F. Requirements. It Also Met Required Strength Demonstrated By Load Tests Throughout The Entire Machine., The General Arrangements Regarding Position & Accessibility Of Guns, Instruments, Etc, Provided The Most Suitable Facilities To Combat Conditions, Added By A Minimum Blind Area. The General Design Of The Night Hawk, Was Intended Primarily Adaptable For Quick Mass Production Of A "Knock-Out-Punch" Fighter To

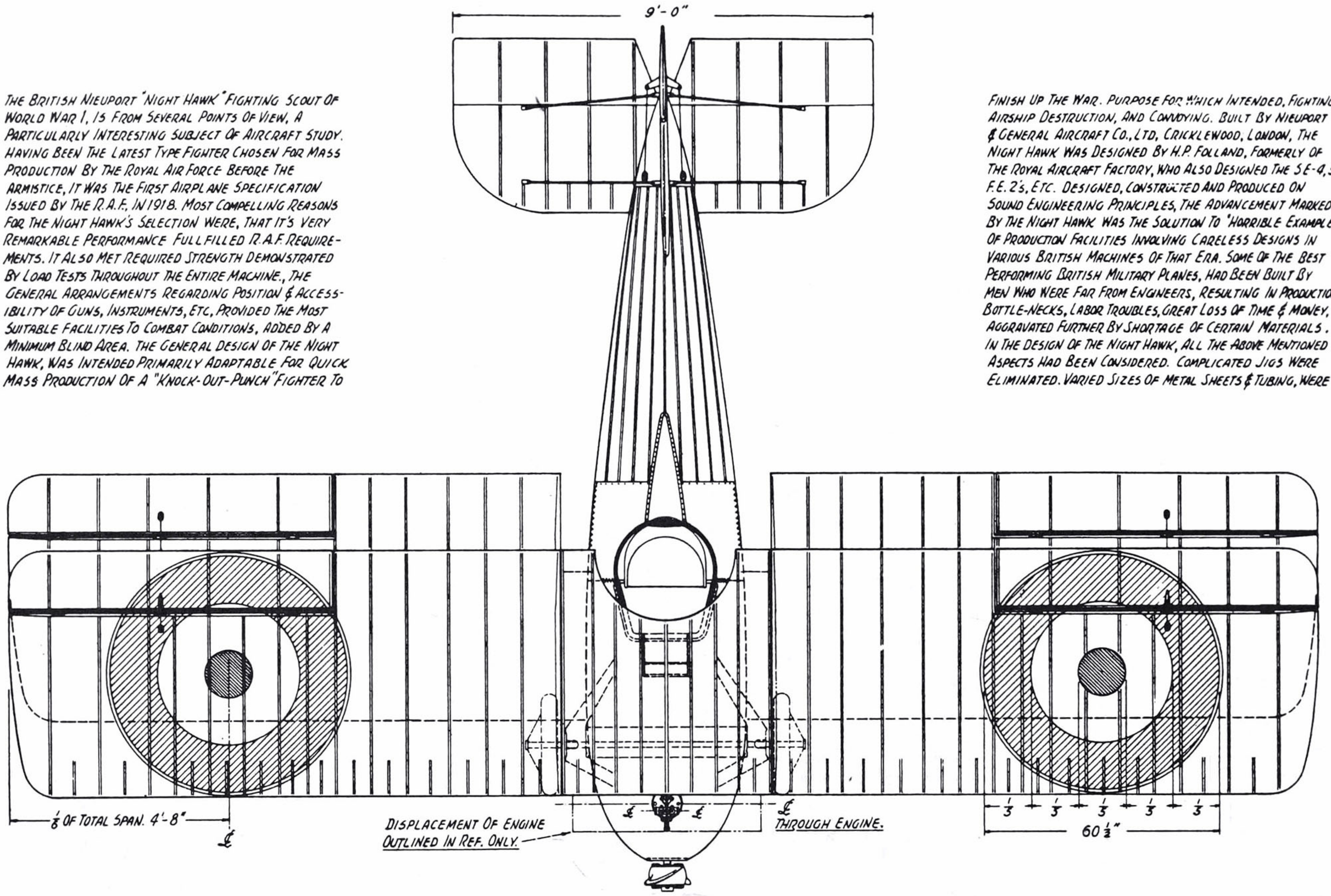

Finish Up The War. Purpose For Which Intended, Fighting, Airship Destruction, And Convoying. Built By Nieuport & General Aircraft Co., Ltd, Cricklewood, London, The Night Hawk Was Designed By H.P. Folland, Formerly Of The Royal Aircraft Factory, Who Also Designed The S.E-4, S. F.E. 2's, Etc. Designed, Constructed And Produced On Sound Engineering Principles, The Advancement Marked By The Night Hawk Was The Solution To "Horrible Examples" Of Production Facilities Involving Careless Designs In Various British Machines Of That Era. Some Of The Best Performing British Military Planes, Had Been Built By Men Who Were Far From Engineers, Resulting In Production Bottle-Necks, Labor Troubles, Great Loss Of Time & Money, Aggravated Further By Shortage Of Certain Materials. In The Design Of The Night Hawk, All The Above Mentioned Aspects Had Been Considered. Complicated Jigs Were Eliminated. Varied Sizes Of Metal Sheets & Tubing, Were No Longer A Production Hindrance. Quantities Of Plentiful, Stock Parts & Fittings Used In S.E-5's, Went Into The New Design. Scrap Materials, Residual From Wing Construction, Were Used In The Fuselage & Tail Frames. Briefly, Standardization, Simplicity & Flexibility Of Production Facility Incorporated In The Night Hawk, Was Further Gratified By It's Excellent And Specific Performance. A Bit Late For Front Line Service Before The Armistice Was Signed, The Night Hawk Was Fully Capable Of Carrying On For The R.A.F., Where The S.E.-5 And The "Snipe" (Which It Resembled) Had Left Off, And Was After "The Big Fuss." Produced In Considerable Quantity, For The Air Force's Peace Program. As The R.A.F's First Truly Modern, Radial Powered Production Airplane, The Night Hawk Was Powered By A 9 Cyl. 320 H.P. "Dragon-Fly" Aircooled Radial Engine, Giving It A Climb Of App. 1500 F.P.M.,

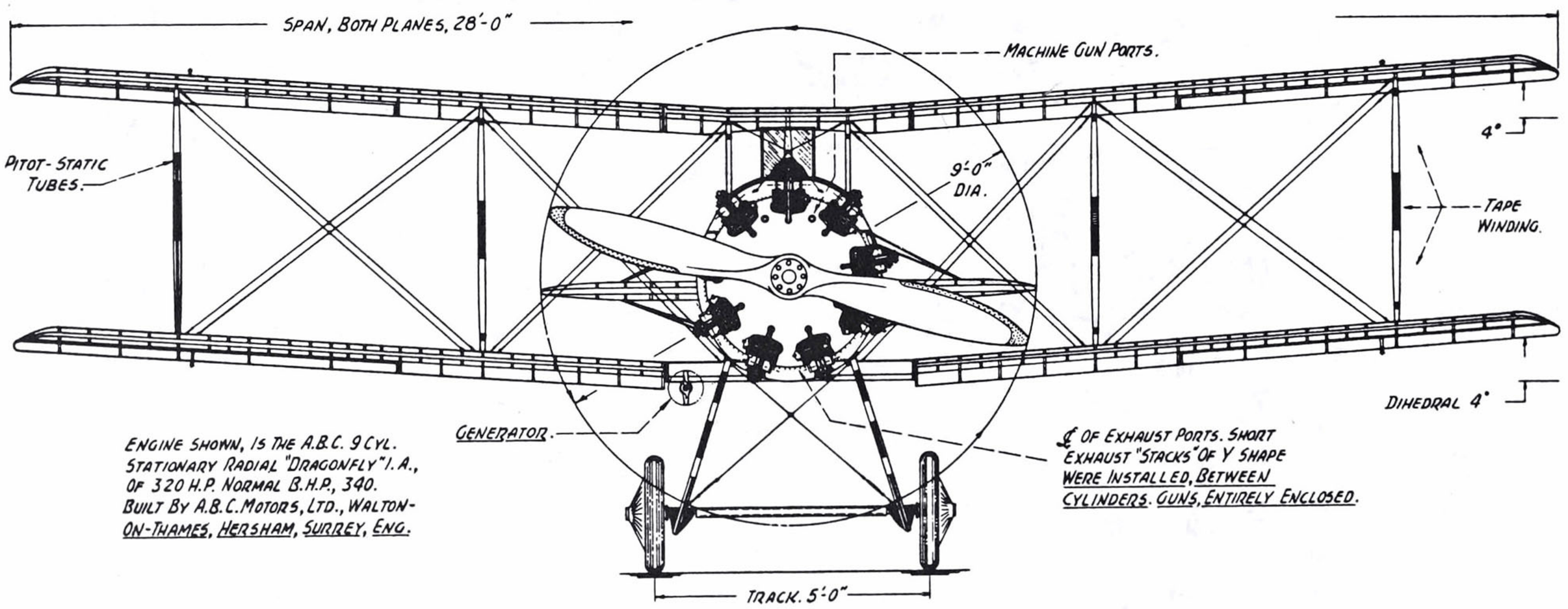

And Top Speed Of 151 M.P.H. With Electrical Clothing Heating Equipment, Oxygen Vaporizer For The Pilot, Three Fuel Tanks, One Oil, Two Automatic Guns, 2000 Rounds Of Ammo, & A Multitude Of Instruments, Fittings & Four 20 LB. Bombs, She Could Climb To 28000 Feet In 25 Min. Specifications: Span, Both Wings, 28'-0". O.A. Length, 18'-6." Max. Height, 9'-3" (Lev. Fl. Pos.) Chord, Both, 63," Incidence, 2½-3°. Dihedral, Both, 4°. Gap. 4'-6". Weights: Empty, 1500 LBS, Wt. Per H.P. 6.62 LBS. Gross, Loaded, 2120 LBS. Fuel Cap. 40 Gals, Oil, 4 Gals. (Lasting 3 Hrs. @ 20000 Ft.) Performance: Speed, At Sea Level, 151 M.P.H. At 10000, 140 M.P.H. At 20000, 121 M.P.H. Landing, 58 M.P.H. Climb, To 5000, 3 Mins., To 10000, 7 Min, To 20000, 20 Mins. Disposable Load Apart From Fuel, 400 Lbs. Total Area Of Wings, 270 □ Total Area Of Tail, 28 □ (Additional Reference Available In "Janes All The World's Aircraft" For 1919.)

Pfalz D.III

drawings by WILLIAM WYLAM

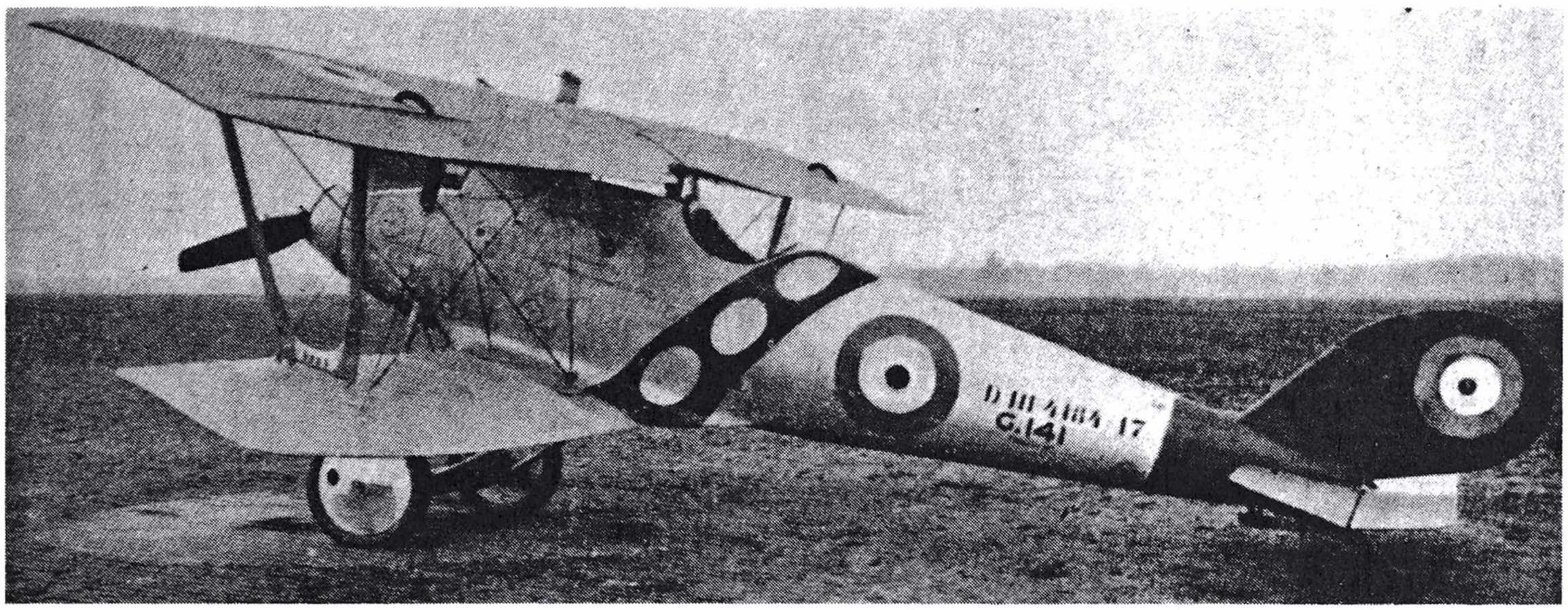

The Pfalz D.III was Germany's attempt to get an edge in the skies over Europe in WW I. Clean in design and very maneuverable, it was still outclassed by Allied aircraft of the era. "Jane's All the World's Aircraft" photos.

The Wylam drawings have been used by countless builders and by the producers of at least one D.III plastic kit. His forward fuselage line under the engine is too full, and the characteristic arrow-shaped profile of the original is lost.

AFTER A SERIES of monoplanes patterned after the French Morane-Saulniers, the D.III was Pfalz's first attempt at producing a modern, high-powered, single-seat fighter. It entered service in 1917 powered by a 160-hp Mercedes engine. Armament was comprised of the usual twin forward-firing Spandaus. Although useful for German units needing replacements, it was considered inferior to other types. Nonetheless, several hundred were built. For the last months of WW I the D.IIIa became available, which was basically a refined D.III with a more powerful (180-hp) engine. Clean in design, light in weight, and very maneuverable, it was one of the first attempts at streamlining by the Germans in order to develop a scout machine with good performance.

No D.III's still exist. □

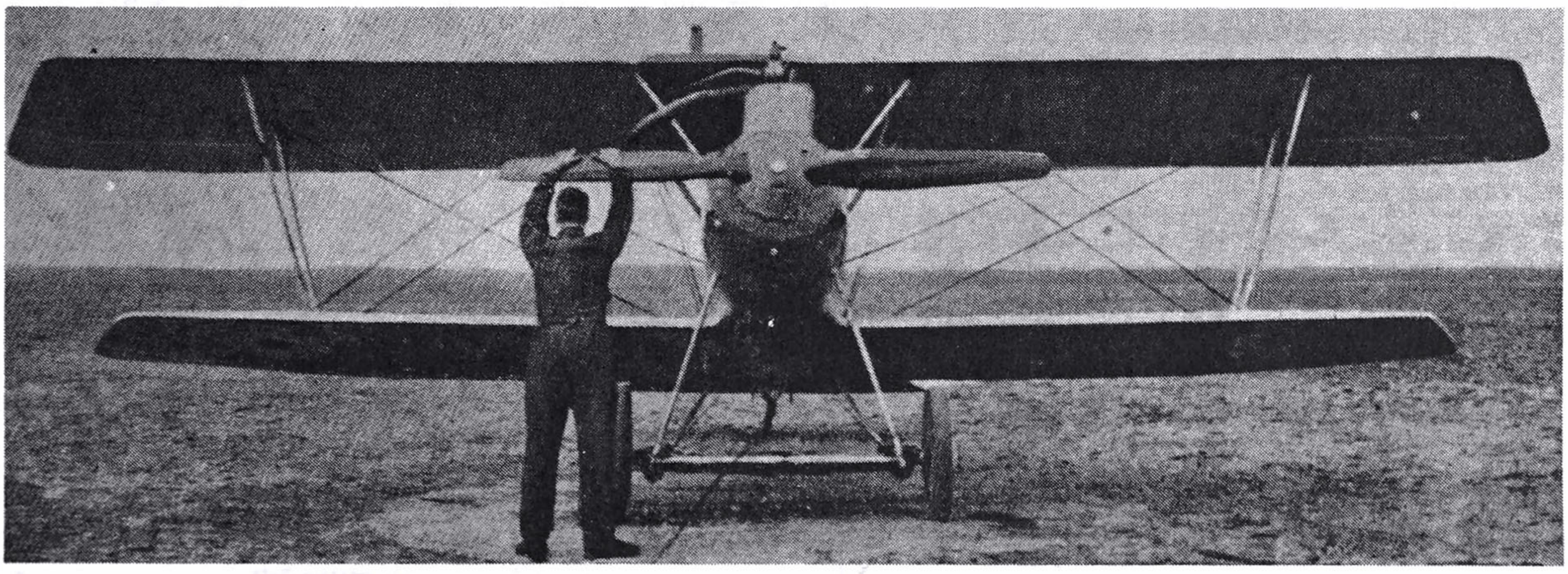

D-3

EARLY D·3 – 160 H.P. MERCEDES
6°20' INCIDENCE (BOTH WINGS) STRUT BRACED HORIZONTAL STABILIZER, UNCOWLED ENGINE, AIR INTAKE ON SPINNER. USED ON EASTERN AND WESTERN FRONTS DURING 1917.

LATE D·3 – 160 H.P. MERCEDES
6°20' UPPER; 3°45' LOWER (INCIDENCE) INVERTED AIRFOIL ON HORIZON. STABILIZER, COWLED ENGINE; AIR INTAKE AT TRAILING EDGE OF SPINNER. USED ON EASTERN, WESTERN & TURKEY FRONTS IN 1917.

D·3A – 180 H.P. MERCEDES
3°45' UPPER; 3°0' LOWER (INCIDENCE) RE-DESIGNED HORIZON. STABILIZER & LOWER WING PANELS; DECREASED GAP. USED ON WESTERN FRONT IN 1918.

AIR AGE INC., 551 FIFTH AVE., NEW YORK 17, N.Y.

SCALE: ¼" : 1'-0"

DATE:

DRAWN BY ... W. A. WYLAM

GENERAL ARRANGEMENTS
GERMAN "PFALZ" FIGHTER

COPYRIGHT 1947 BY WILLIAM A. WYLAM

WHITE TRIM
BLACK
GREEN - FROM HERE BACK
ALUMINUM - HORIZON. STABILIZER
BLACK ON ALUMINUM BACKGROUND
RED - JAGDSTAFFEL 21
BLACK STENCILED SERIAL
III 1370/17
3'-7½"
1'-1¾"
FUEL LINE - AUX. FUEL TANK
AILERON CONTROL CRANK
BEAD GUN SIGHTS
FIXED WINDSHIELD
SHUTTER PUSH-PULL HANDLE
LEATHER PADDING
WATER LINE (TO PUMP)
WATER LINE (TO WING RADIATOR)
AIR INTAKE
GREEN (PILOT'S IDENTIFICATION)
GREEN NOSE & TAIL WAS IDENTIFICATION MARK OF PILOT FOR No. 1370.
23'-2"
5"
9¼"
3'-5¼"
1'-4¾"

STEEL PLATE
PIVOT POINT
ELASTIC SHOCKCORD
BLACK
WHITE
BLACK - JAGDSTAFFEL 37
PILOT'S IDENTIFICATION COLOR WAS PAINTED BETWEEN RINGS, ON SPINNER, AND ON WHEEL HUBS.
4179/17
1'-1"
1'-1¾"
EXPANSION RESERVOR
TANK COVER CAP
FLEXIBLE WINDSHIELD
EMPTY SHELL CASES ACCESS
CARTRIDGE BELT ACCESS
AILERON CONTROL CABLES
PLYWOOD FAIRING PANEL
LANDING GEAR STRUT SOCKET
COOLING AIR OUTLET
LEADING EDGE - MACHINE GUNS
A, D, & E
A & D
C
23'-2"
GREEN (PILOT'S IDENTIFICATION)
CARBURETOR ACCESS DOOR
1'-4¾"
3'-5¼"

2'-5"
5897/18
RUDDER CONTROL CABLE
ELEVATOR CONTROL CABLES
TAIL LIFT HANDHOLE
REMOVABLE BONNET
FIXED SPANDAU M.G.
EMPTY BELT CHUTE
TURNBUCKLES
CABANE SOCKET PLATE
HINGED COVER DOORS - FOOT STEPS
BLACK - PILOT'S IDENTIFICATION: "M" FOR MAIER
METAL PLATE
STEEL TUBING
PRESSURE RELEASE LINE - MAIN TANK
NOTE:
ENTIRE FUSELAGE WAS OF PLYWOOD MONOCOQUE; FINAL COVERING WAS FABRIC.
FRONT VIEW
4'-0"
3'-5¼"
1'-4¾"
13½°
RE-WORKED NOSE
SAME LANDING GEAR ON D·3 AND D·3A
4'-4½"
4'-5"

FUEL LINE (AUX. TANK)
WATER LINE (TO PUMP)
WATER LINE (TO RAD.)
AIR INTAKE
PLAN VIEW
SIDE VIEW
EARLY D·3 EXHAUST MANIFOLD DETAILS
PLAN VIEW
SIDE VIEW
LATE D·3 EXHAUST MANIFOLD DETAILS
FORWARD
D·3A EXHAUST MANIFOLD DETAILS
RED - JAGDSTAFFEL 11 (1918)

NOTE:
ENTIRE LINE OF D·3 & D·3A WERE SPRAYED ALL ALUMINUM.

30'-10½" WING SPAN - BOTH D·3 & D·3A

4" 1½" 1'-6¾" 1'-0" 6" 7" 1'-5½" 1"

D·3A FRONT VIEW SHOWN
LATE D·3 HAD ALMOST SAME FRONT VIEW EXCEPT FOR FRONT VIEW OF WINGS & EXHAUST MANIFOLD

A B C D E
2'-0"

AILERON CONTROL CABLES

25'-5" WING SPAN – D·3A ONLY

26'-7¾" WING SPAN – D·3 ONLY

PROPELLERS:

WOLFF	8'-11" DIA.	D·3 ONLY
LORENZEN	8'-11½" DIA.	D·3 ONLY
AXIAL	9'-4" DIA.	D·3A ONLY
HEINE	9'-1½" DIA.	D·3A ONLY
IMPERIAL	8'-10½" DIA.	D·3A ONLY

WATER LINE TO PUMP
SHUTTER PUSH-PULL HANDLE
EXHAUST MANIFOLD
AIR INTAKE SCOOP
PRESSURE RELEASE LINE

FRONT BAY ONLY
3¼"
4"
2'-6" DIA.
5'-7½" TREAD
3¼"

PET COCK - GRAVITY FUEL LINE (TO CARBURETOR)
AUX. FUEL TANK – 9 GALLONS
AIR INTAKE - OIL COOLER
STEEL STRAP
COOLING AIR OUTLET
ELASTIC SHOCKCORD
COMPRESSION TUBE
FIXED SUB-WING

REAR MOUNTING PLATE
STEEL TUBING
PLAN VIEW
7/8" DIA. COMPRESSION TUBES
STEEL STRAP
FRONT BAY ONLY
FRONT STRUT
D-3A SUB WING
FRONT
REAR STRUT
D-3 SUB-WING
2" DIA. AXLE SHAFT
EARLY D-3 STRUT
FABRIC
PLYWOOD
SECTION "A-A"
ON D-3, SUB-WING WAS BUTTED TO SIDE STRUTS
SIDE-VIEW
AXLE SLOT
COMPRESSION TUBE
SHOCKCORD LOOP
LANDING GEAR DETAILS

NOTES:
1. JAGDSTAFFEL "11" ON D-3A'S SIDE-VIEW SHOULD READ JAGDSTAFFEL "44" ("RED BONNETS").
2. EXHAUST SHOWN (PLAN-VIEW) WAS USED ON D-3A ONLY; FOR D-3 EXHAUST MANIFOLD DETAILS, SEE GENERAL ARRANGEMENT PAGE NO. 1.
3. PFALZ D-3 WERE NOT KNOWN TO BE FINISHED IN STANDARD HEXAGONAL CAMOUFLAGE.

WHITE TRIM (OPTIONAL)

D-3 UPPER & LOWER WINGS

D-3A ONLY

OVERHANG WIRE

LOWER WING SPAR & STRUT DETAILS

RUDDER HORN
ELEVATOR HORN
ELEVATOR HINGE
D-3
D-3A

WATER LINE TO PUMP
WATER LINE TO RADIATOR
WATER EXPANSION RESERVOIR
EXHAUST (D-3A ONLY)
LAMINATED WOOD
WING FUEL TANK
INTAKE MANIFOLD
UPRIGHT ENGINE COWL
AIR INTAKE SCOOP
METAL NOSE COWL

COMPARTMENTS
D-3A WINDSHIELD
FIXED SPANDAU GUNS
AMMUNITION CHUTE
EMPTY BELT CHUTE
GRAVITY FUEL LINE

STARBOARD M.G.
PORT M.G.
WINTER COWL
WINTER PLUG

EARLY D-3 WITH BURIED SPANDAU GUNS
GUNS WERE RE-LOCATED ON EARLY D-3s AS SHOWN ON GENERAL ARRANGEMENT PAGE NO. 1.

AILERON CONTROL CABLE
AILERON BALANCE CABLE
PULLEYS
FALSE SPAR
1'-4 1/4" AIRPLANE
D-3 TIPS
LOWER WING PANEL - D-3A
(D-3 HAD SAME CONSTRUCTION)

PLYWOOD CENTER PANEL
AUXILIARY SPAR
STIFFENER
WELDED STEEL AILERON
AILERON CRANK

COMPRESSION TUBE
TURNBUCKLE & EYELET
CAPSTRIP - UPPER SURFACE ONLY
AILERON CRANK
SLOT
REAR SPAR
FRONT SPAR - MAIN RIB
AILERON HINGE
OVERHANG WIRE (D-3A ONLY)
REAR MOUNTING PLATE
PRESSURE RELEASE LINE
PLYWOOD BUTT JOINT
SPAR ACCESS DOORS

D-3A UPPER & LOWER WINGS

MAIN RIBS CAPSTRIP
PLYWOOD PLATE (RIBS)
PLYWOOD PLATE (SPAR)
UPRIGHT BLOCK

PFALZ D-3 & D-3A SPAR & RIB DETAILS

SHOCKCORD
FIXED SUB-WING
STEEL STRAP
COOLING AIR OUTLET
EXHAUST (D-3A)

BOTTOM VIEW

THANKS TO EVON P. JAMES, ERNEST W. ATKINS & CHARLES DONALD FOR PHOTOGRAPHS.

COPYRIGHT 1947 BY WILLIAM A WYLAM

AIR AGE INC., 551 FIFTH AVE., NEW YORK 17, N.Y.
SCALE: 1/4" = 1'0"
DATE:
DRAWN BY ... W.A.WYLAM

GENERAL ARRANGEMENTS
GERMAN PFALZ FIGHTER
D-3

SEAT SUPPORT RAILS
FIXED STABILIZER PANEL
ENGINE MOUNT RAILS
BONNET SUPPORT FRAME
METAL COWL
PLYWOOD WEBS
FIXED WOODEN FORMS
WELDED ALL STEEL RUDDER
RUDDER SUPPORT
HORIZONTAL STABILIZER WAS SLIDED INTO POSITION, BOLTED TO STERN; AND WAS FIXED TO PANEL BY METAL STRIPS & SCREWS.
D-3
D-3A
WOOD CONSTRUCTED ELEVATOR
FABRIC
PLYWOOD COVERED HORIZONTAL STABIL'R.
AIR PRESS. LINE TO TANK
FUEL LINE (TO CARBURETOR)
PRESS. GAUGE & VALVE
COMPASS
SWITCH PANEL
TACHOMETER
MAIN FUEL TANK
EMPTY SHELL BOX
PADDED RIDGE
M.G. CHARGING HANDLE
ALTIMETER
HAND PUMP
SWITCH PANEL
PIVOTED ARM
COMPASS
SEAT RAIL
FRONT M.G. BRIDGE
EMPTY BELT CHUTE
EMPTY SHELL BOX
MAIN FUEL TANK
ACCESS DOORS
AMMUN. BOX
WATER TEMP.
AIRSPEED
HAND PUMP
SHOULDER STRAP
M.G. CONTROL
SUPPORT PULLEYS
ELEVATOR CONTROL CABLES
RUDDER CONTROL CABLES
AILERON ROCKER ARM
FRONT SUPPORT BEARINGS
RUDDER CONTROL BAR
FLOORBOARD
FUEL LINE TO CARBURETOR
PRESSURE RELEASE LINE
FRONT M.G. BRIDGE
EMPTY SHELL BOX
PLYWOOD SHELF
TANK MOUNT BAND
FUEL TANK COVER CAP
SPAR PLATE
SPAR LUG
AMMUNITION BOX
EMPTY BELT CHUTE
FUEL GAGE
MAIN FUEL TANK
RUDDER BAR
FLOORBOARD
AILERON ROCKER ARM
AILERON CABLES
WING PULLEYS
HINGED ACCESS DOORS
FIXED WINDSHIELD
ALTIMETER
REAR M.G. BRIDGE
AIRSPEED
WATER TEMP. GAGE
HAND PUMP
AIR PRESS. GAGE
ENGINE THROTTLE
M.G. FIRING BUTTONS
PLYWOOD CUT-OUT
GUN SIGHT
M.G. ADJUSTMENT
TACHOMETER
SWITCH PANEL
PRESS. RELIEF VALVE
PIVOTED ARM
ELEVATOR LOCK
COMPASS
PADDED RIDGE
CUSHION
RAIL SUPPORT
AILERON CONTROL CABLE
AILERON BALANCE CABLE
AILERON ROCKER ARM
ELEVATOR CONTROL CABLES
RUDDER CONTROL CABLES
CONTROL COLUMN PULLEYS
CONTROL DIAGRAM
INLET
OUTLET
RADIATOR
MACHINE GUN FIRING BUTTONS
FLEXIBLE GUN CONTROL CABLES
REAR GUIDE SLOT
PUSH-PULL HANDLE
PIVOTED ARM
ELEVATOR LOCK (HAND SCREW)
BALL SOCKET JOINT
RUDDER BAR
WING RADIATOR-SHUTTER PANEL (BOTTOM VIEW)
TWIST GRIP ENGINE THROTTLE
ADJUSTABLE LEATHER STRAP
PIVOTED FOOT PETALS
RUDDER CONTROL CABLE
OFF
ON
PFALZ FLIGHT CONTROLS
RUDDER BAR SUPPORT
FLOORBOARD CUT-OUT
FRONT SUPPORT BEARINGS
AILERON CONTROL CABLES
AILERON BALANCE CABLE
ELEVATOR CONTROL CABLES
REAR SUPPORT BEARINGS

COPYRIGHT 1947 BY WILLIAM A WYLAM

AIR AGE INC., 551 FIFTH AVE., NEW YORK 17, N.Y.

SCALE: 1/4" = 1'-0"

DATE:

DRAWN BY ... W.A.WYLAM

FUSELAGE DETAILS
GERMAN "PFALZ" FIGHTER
D-3

D-3 LOWER WING

REAR SPAR-LOWER ℄
REAR SPAR-UPPER ℄
FRONT SPAR-LOWER ℄
AUX. FUEL TANK
FRONT SPAR-UPPER ℄
WING RADIATOR

AILERON HINGE

D-3A LOWER WING

D-3 AND D-3A UPPER WING

NO DIHEDRAL

1° DIHEDRAL (D-3 & D-3A)

HORIZONTAL THRUST ℄

WHEELS ℄

EARLY D-3 INCIDENCE -6°.20'
LATE D-3 INCIDENCE 3°.45
D-3A INCIDENCE 3°.0'

D-3 : 2°.9½'
D-3A: 2°.7⅞'

HORIZONTAL THRUST ℄

CABANE ℄

STAGGER

HEIGHT OF STRUTS VARIES ACCORDING TO INCIDENCE

OUTBOARD STRUTS

D-3 INCIDENCE -6°.20'
D-3A INCIDENCE 3°.45

D-3

D-3A

CABANE DETAILS

HEIGHT OF CABANE VARIES ACCORDING TO INCIDENCE

D-3 ONLY

LATE D-3 & D-3A

D-3A ONLY

AIRPLANE ℄

ALMOST STRAIGHT FROM J TO P

SHEET METAL LINED M.G. CUTOUTS PARALLEL TO AIRPLANE ℄

SHEET METAL LINED CABLE OUTLETS STRAIGHT FROM H TO P

COWL PLATE ON EXHAUST SIDE-LATE D-3 & D-3A

D-3A WITH REWORKED NOSE

THRUST ℄

STRAIGHT FROM J TO P

5" DIA. OPENING
1'-6" DIA. SPINNER

LOWER WING AIRFOIL

STRAIGHT DECK ON D-3 & D-3A
EARLY D-3 HAD ONLY NOSE COWL

UPPER WING AIRFOIL

CABANE STRUT ATTACHMT PLATES

D-3 NOSE

COPYRIGHT 1947 WILLIAM A. WYLAM

AIR AGE INC., 551 FIFTH AVE., NEW YORK 17, N.Y.	
SCALE: ¼" = 1'-0"	LAYOUT DATA & DETAILS GERMAN PFALZ FIGHTER
DATE:	
DRAWN BY ... W.A.WYLAM	D-3

Pfalz D.XII

drawings by WILLIAM WYLAM

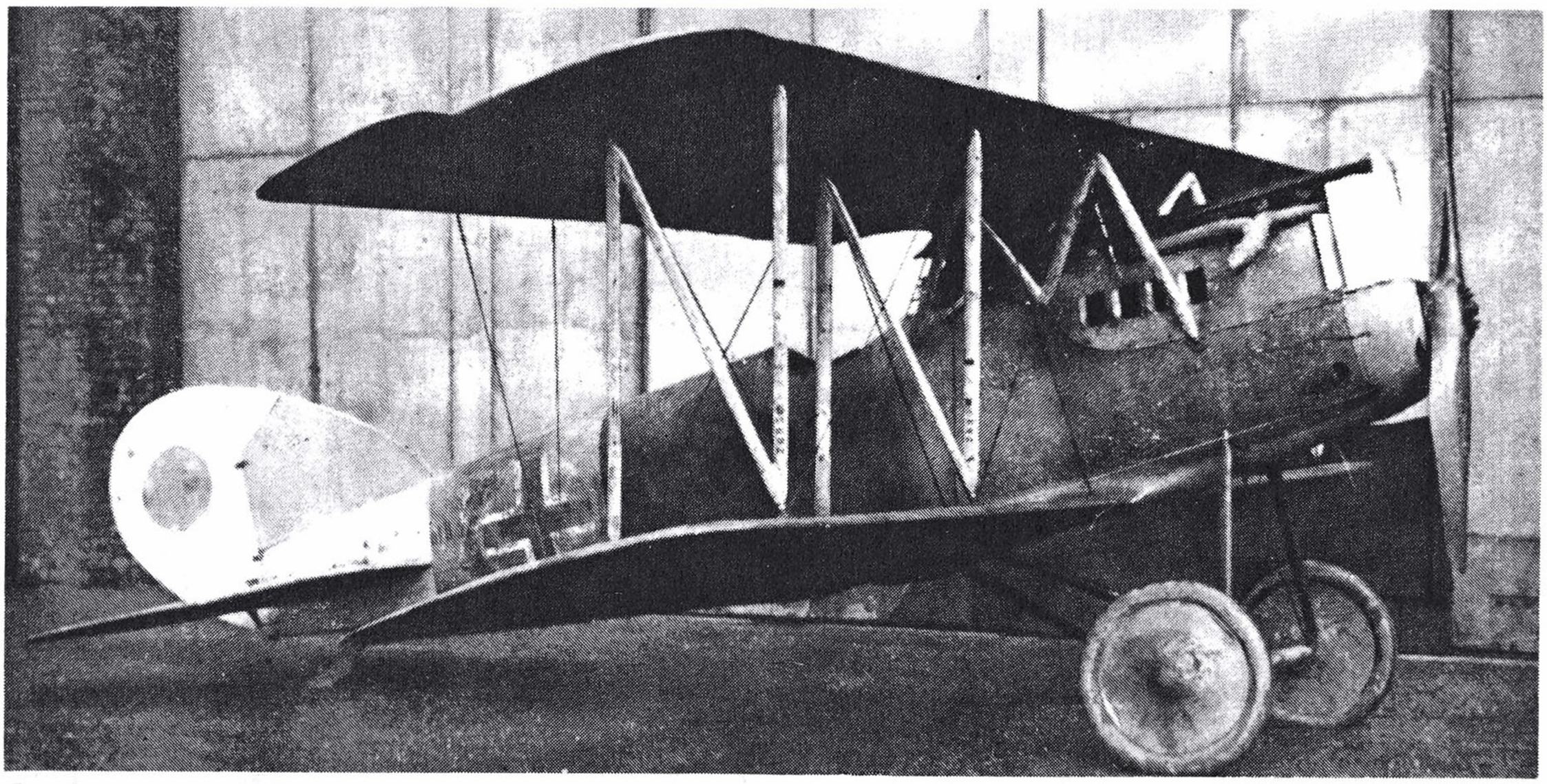

THE PFALZ D.XII was designed late in 1917 as a high-performance single-seat pursuit plane. Economy of construction was a prime prerequisite in view of Germany's increasing shortage of strategic materials, and the airplane was built largely of wood at a time when metal fabrication was coming into the picture. The fuselage utilized plywood skin.

Pilots found the D.XII to be a stable airplane and easy to fly. It required little attention when cruising, although it was somewhat difficult to keep straight on the ground due to a sluggish rudder effect. But mechanics found its two-bay rigging difficult to keep in trim, especially when compared to the wire-less Fokker D.VII.

Beautiful in form, the D.XII was advanced for its time. Equipped with either a Mercedes 160- or 180-hp powerplant, depending on date of manufacture, the engine was cooled by a nose radiator located entirely above the propeller shaft. It had two fuel tanks located in the fuselage and worked under air pressure.

The D.XII reached the front too late in the war to make an imposing record for itself.

There are four left, all in museums. □

This Pfalz D.XII was a rugged design as seen in photo of wreckage below. "Jane's All the World's Aircraft" photos.

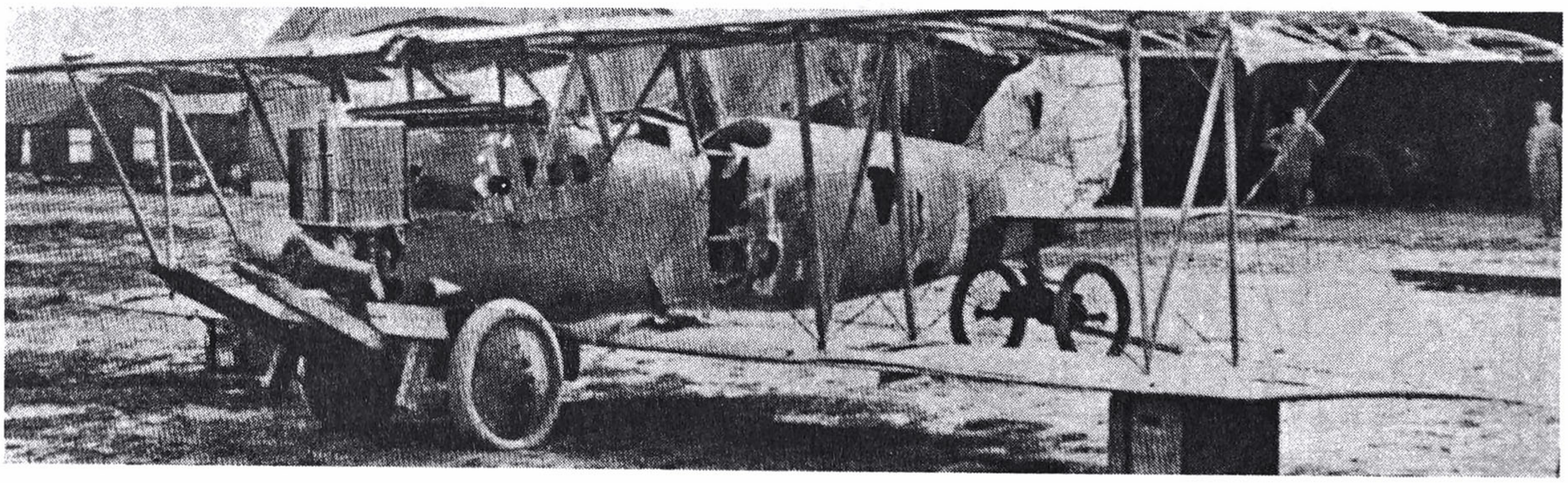

AIR AGE INC., 551 FIFTH AVE., NEW YORK 17, N.Y.

SCALE: 1/4 = 1'-0"

TYPE: FIGHTER

COPYRIGHT 1947
WILLIAM A. WYLAM

GENERAL ARRANGEMENTS
GERMAN "PFALZ" AIRPLANE
D-12

BUILT 1917-18 BY PFALZ FLUGZEUGWERKE G.M.B.H.

21'-5"
No.1 Cylinder
Steel Channel-Gun Mount Brace
Radiator Shutter Panel
Carburetor Access
3'-4 1/4"
2'-10 3/4"
1'-7"
Aileron Crank
M.G.'s Charging Handles
Fixed Windscreen
Aluminum Cowling
Pilot's Identification; Name Unknown
White With Red Trim
Fabric Covered-All White-Black Cross
White - 4th Army
Jagdstaffel 52
Jagdstaffel 51
White
Red
Hinge
2'-3 1/2"
3'-10 1/2"
Fabric
10"
White
Black
Pfal D.XII 3216/18
9'-1 1/2" Dia. Propeller (Heine)
5'-3"
4'-1"
2'-2"
Plywood
Alum. Nose
Alum. Air Scoop
Drift Wire "D"
Fabric Disc
Black Propeller
Flying Position Of Wheels
14°
Cooling Air Outlets
Aluminum Cowl
Aileron Cables
Aluminum Fairings
Wooden Tailskid-Ash
Tail-Dolly Lug
Steel Tailskid Shoe
Water Line From Engine
Brass Tank
2'-0"
Baffle
Shutter Panel
Welded Channel
Water Line To Pump
Brass Oval Tubes
Plywood
Pea Green - Fabric Covered
4'-4 1/4"
Bottom View
Elastic Shockcord
Access Panels - Spar's
Fabric Covered Fin
Aux. & Main Tank Relief
Brace Wires
Drift Wire
Oil Pump Access
Exhaust Manifold
Fixed Wooden Sub-Wing
Strut's Socket Plate
Cooling Air Outlets
Safety Harness
Airspeed Indkator
Empty Clips Chute
Aux. Fuel Tank Fill
Front Gun Mount & Brace
Pressed Dome
Starboard Side
Airspeed Indicator
Rear Gun Mount

Nose Details
Entire Radiator Assembly Was Aluminum Lacquered

Thanks To: Ernest W. Aikens, Peter M. Bowers, Charles Donald & Evon P. James For Use Of Their Photos.

Hinge
1'-10 3/4"
Aileron Crank Slot
Black & White Cross
A
B
C
D
Main Rib
Nose Cap Strip
Center Cap Strip
Ammunition
Aux. Fuel Tank Fill
Pressed Dome
Cooling Air Outlets
Radiator Shutter
Radiator Baffle
Channel-M.G. Brace
Radiator Water Fill
Fixed Windscreen
M.G. Charging Handles
Empty Clips Chute
1'-0"
6"
180 H.P. Mercedes
Spandau Mach. Gun
Threaded Extension (On Dome)
Turnbuckle Fitting
Welded Nut (To "N" Strut)
Compression Tube
Spar
Ball Headed Bolts
Interplanes Strut Fittings

Upper & Lower Wing Details
(Minus Drag Wires & Tubes)

Wing's Color Scheme
Dark Green - Upper Surface
Blue-Grey - Lower Surface
White
Aileron Control Cables
Dark Green Haze
Blue-Grey Haze
Dark Purple (Base)
Pea Green (Base Color)
Dark Green & Pea Green

Semi-Standard Camouflage

Front Bay Only
Air Intake
4"
4 1/4"
2'-4" Dia.
5'-6" Tread

Front Landing Gear Strut Socket Details

PADDED BACKREST
SHOULDER STRAP

AMMUNITION (EMPTY SHELL CASES & CLIPS) WERE DISCHARGED INTO THE AIR AFTER FIRING.- DEFLECTED BY METAL CHUTES.

STEEL SHOCKSPRINGS
FIXED STABILIZER
STEEL PLATE
PLYWOOD PANEL
ELEVATOR CABLE PASS THRU STABILIZER
STRINGER "Z"
STRINGER "Y"
AUX. FUEL TANK
AMMUNITION
MAIN FUEL TANK
ENGINE MOUNT
EMPTY CLIPS CHUTE
AMMUNITION
AUX. FUEL TANK
RUDDER BAR
AIRSPEED
IGNITION
ALTIMETER
THROTTLE
WATER TEMP
AIR PUMP
AIR PRESS
COMPASS (?)
PRESS. RELEASE VALVE
TACHOMETER
MACH. GUN FIRING CONTROL
FLOORBOARD
AILERON CRANKLEVER
DOUBLE ENCLOSED PULLEYS
WELDED ALL STEEL FIN (FABRIC COVERED)
RADIATOR
180 H.P. MERCEDES
AUX. FUEL TANK
AMMUNITION
AIRSPEED
THROTTLE CONTROL COLUMN
AIR PUMP
STRINGER "Y"
STRINGER "Z"
WATER LINE TO PUMP
FUEL LINES
OIL PUMP
WATER LINE TO ENGINE
RUDDER BAR
MAIN FUEL TANK
PLYWOOD FLOORBOARD
RUDDER CABLES
ELEVATOR CABLES
REAR SUPPORT BEARINGS
DOUBLE AILERON PULLEYS
SHOCK SPRING
STEEL FITTINGS
PLYWOOD BOXED FRAME
AILERON CRANK
STEEL TUBING
CAT-STRIP - UPPER SURFACE ONLY
WELDED ALL STEEL

SECTION "R-R"

PLYWOOD REINFORCED BOX

ELEVATOR WAS BUILT IN RIGHT & LEFT HAND UNITS OF WELDED STEEL TUBING.

ELEVATOR

SPAR (TUBING) WAS FLATTENED HOLE DRILLED & 3/16" DIA. ROD INSERTED FOR HINGE AXLE. HINGE WERE EYELETS ON STABILIZER & ELEVATOR

WELDED-ALL STEEL RUDDER
RUDDER HORN (REF. ONLY)
RUDDER FITTING
PLYWOOD COVERED WING-WALK
STEEL WIRE (TRAILING EDGE)
DOUBLE AILERON PULLEYS
AILERON CONTROL CABLES

COMPRESSION TUBE (REF. ONLY)
CROWN LOCK NUT
BALL HEADED BOLT
THREADED EXTENSION (ON DOME)

SECTION "S-S"

MAC. GUN'S FIRING CONTROLS
PADDED HAND-GRIPS
FLEXIBLE GUN CONTROL CABLES
SAME RUDDER BAR AS D-3'S
FLOORBOARD

CONTROL COLUMN MOVEMENT TO LEFT PRODUCES THE CABLE MOVEMENTS AS SHOWN.

AILERON CABLE CONTROL SYSTEM

ELEVATOR CABLES
AILERON CRANK LEVER
AILERON CONTROL CABLES
DOUBLE PULLEYS - ALUM. HOUSING
CONTROL COLUMN SUPPORT SHAFT
SOCKET PLATE - STEEL
STREAMLINED STEEL TUBING
FIXED SPREADERS - STEEL TUBINGS
FIXED WOODEN SUB-WING

2" D.I.A. AXLE SHAFT
3/4" DIA. SPREADER

SECTION "T-T"

FLIGHT CONTROLS

ELASTIC SHOCKCORDS

FRONT

SHOCK STOP GUARD CORD

TRUE PLAN

SHOCK STOP GUARD CORD
SHOCKCORD SLOT

AXLE

NOTES ON PFALZ D-3 & D-12

1. TAPE & PLYWOOD LATTICE WORK ON EARLY D-3'S WERE REMOVED ON LATE D-3'S WINGS.
2. LATE D-3'S FUSELAGE STRUCTURE WAS CHANGED TO STIFFEN THE WEAK SPOTS; ALSO TO CONTROL WARPAGE. LATE D-3'S FUSELAGE DIFFERS IN CONSTRUCTION ONLY.
3. ORIGINAL SINGLE UNIT (ENCLOSED DOUBLE PULLEYS) AILERON CONTROL WAS CHANGED TO CRANK LEVER AS SHOWN IN D-3'S FLIGHT CONTROLS.
4. EXHAUST MANIFOLD (D-123) VARIED DURING PRODUCTION.
5. INSTRUMENT LOCATIONS ALSO DIFFERS ON VARIOUS PRODUCTIONS.

AIR AGE INC., 551 FIFTH AVE., NEW YORK 17, N.Y.

SCALE: 1/4 & 1/2 - 1'-0"

TYPE: FIGHTER

COPYRIGHT 1947 WILLIAM A. WYLAM

FUSELAGE DETAILS
GERMAN "PFALZ" AIRPLANE

D-12

BUILT 1917-18 BY PFALZ FLUGZEUGWERKE G.M.B.H.

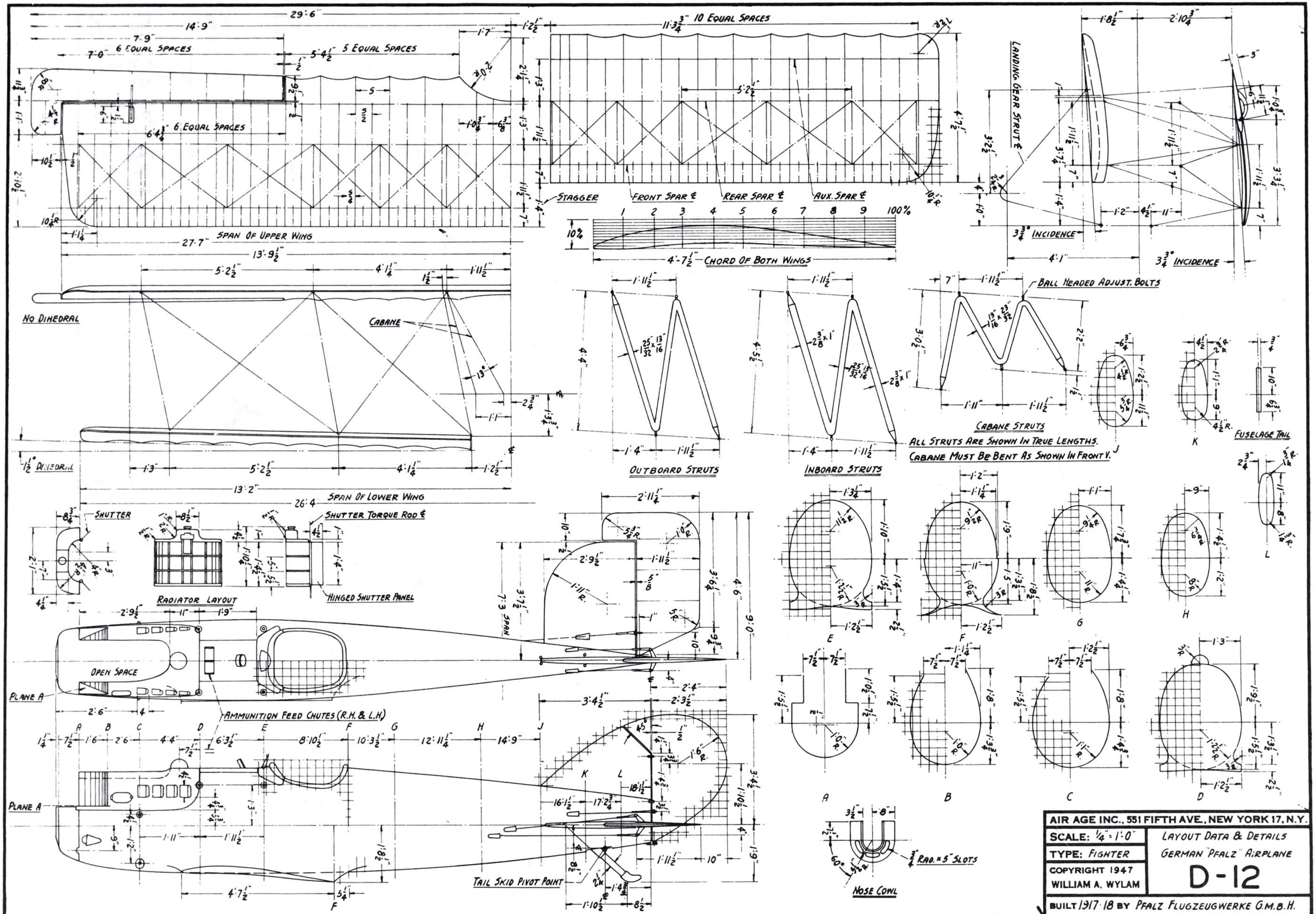

AIR AGE INC., 551 FIFTH AVE., NEW YORK 17, N.Y.

SCALE: 1/4" = 1'-0"	LAYOUT DATA & DETAILS
TYPE: FIGHTER	GERMAN "PFALZ" AIRPLANE
COPYRIGHT 1947 WILLIAM A. WYLAM	D-12
BUILT 1917-18 BY PFALZ FLUGZEUGWERKE G.M.B.H.	

drawing by BARNETT FEINBERG

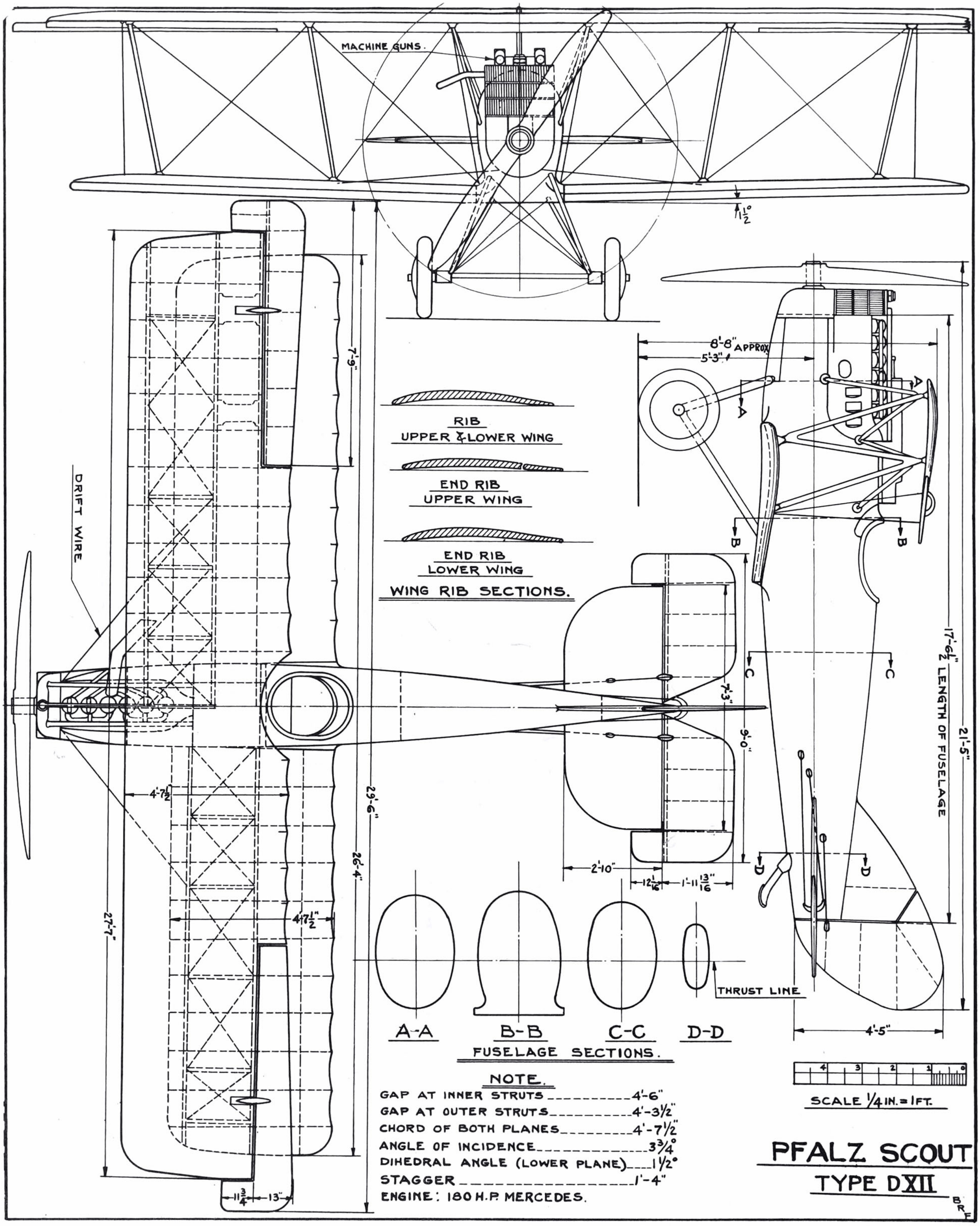

NOTE.

GAP AT INNER STRUTS	4'-6"
GAP AT OUTER STRUTS	4'-3½"
CHORD OF BOTH PLANES	4'-7½"
ANGLE OF INCIDENCE	3¾°
DIHEDRAL ANGLE (LOWER PLANE)	1½°
STAGGER	1'-4"
ENGINE: 180 H.P. MERCEDES.	

PFALZ SCOUT
TYPE DXII

B R F

RAF S.E.5a

drawings by WILLIAM WYLAM

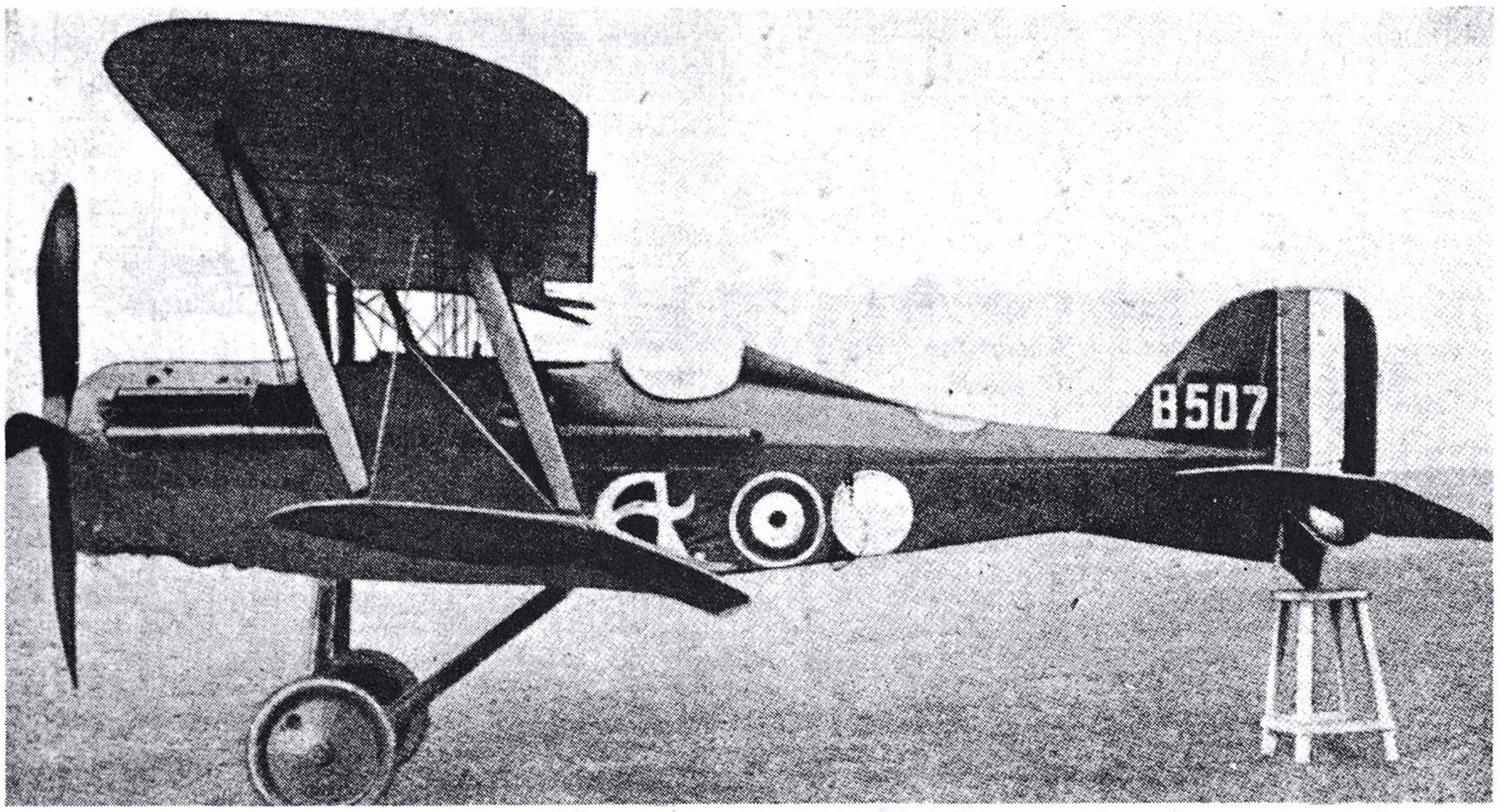

One of the most famous aircraft of WW I was the S.E.5a and it is credited with turning the tide in air supremacy over the Allied forces. "Jane's All the World's Aircraft" photos.

THE SCOUTING Experimental Number 5 was produced by the British Royal Aircraft Factory and appeared at the front during "bloody April" of 1917, the blackest month of the war in terms of casualties for the British RFC. Armed with either two Vickers guns or a Vickers and a Lewis gun, the Scout soon proved a match for the German Albatros, which up until that time had ruled the skies.

The S.E.5, and the later S.E.5a with a geared engine, was renowned for its ruggedness and proof of this fact came during a battle when a pilot actually flew an S.E.5 through the side of a house and emerged unhurt. It was also a favorite for fighter pilots of the Royal Flying Corps. Britain's leading Ace, Major Edward Mannock, scored 50 of his 73 victories while flying the S.E.5 Scout. William Bishop and Ray Collishaw also downed a majority of their credits in this aircraft.

A major contribution to the war effort, the 25th Aero Squadron was formed at Kelly Field in June 1917. The unit was made up of American pilots and ground personnel and their participation in the Great War has gone down in history as one of the turning points in favor of the Allies. The S.E.5 was a great aid to that end. In October 1918, no less than 16 units of the RFC were equipped with the S.E.5 and 5a. The speed of the airplane was reported to be 132 mph at 6,500 feet, with a climb of 765 fpm and a service ceiling of 20,000 feet. □

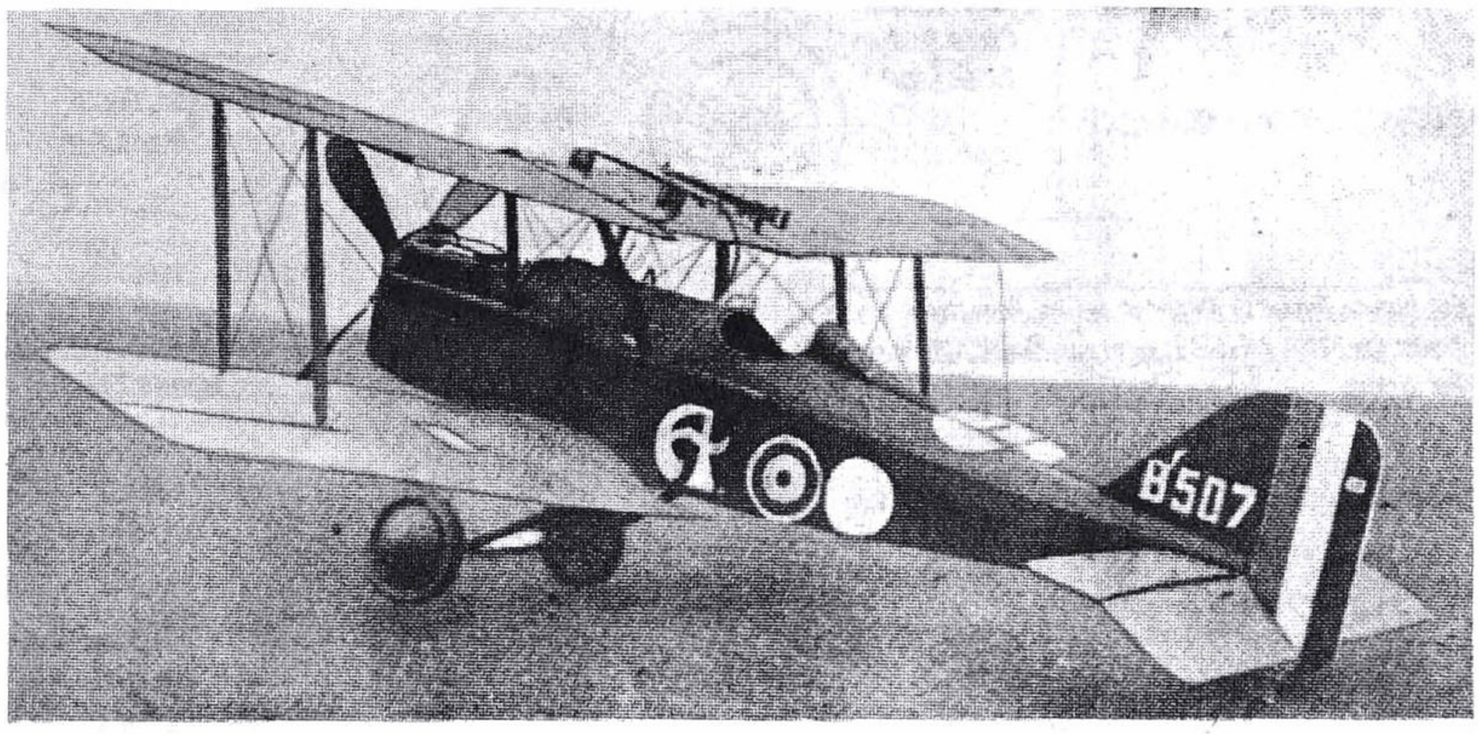

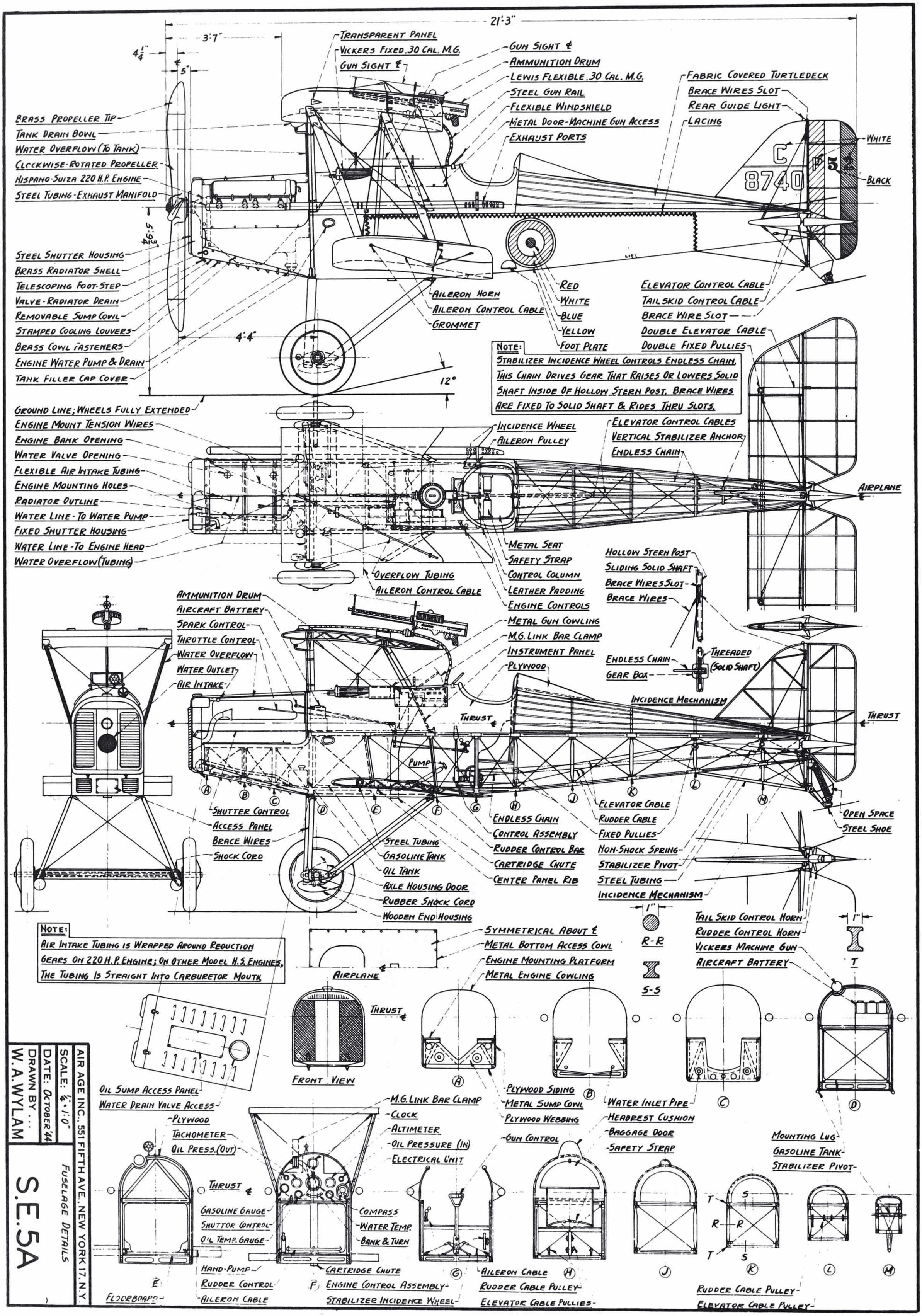
21'-3"
3'-7"
4 1/4"
5"
TRANSPARENT PANEL
VICKERS FIXED .30 CAL. M.G.
GUN SIGHT ℄
GUN SIGHT ℄
AMMUNITION DRUM
LEWIS FLEXIBLE .30 CAL. M.G.
STEEL GUN RAIL
FLEXIBLE WINDSHIELD
METAL DOOR-MACHINE GUN ACCESS
EXHAUST PORTS
FABRIC COVERED TURTLEDECK
BRACE WIRES SLOT
REAR GUIDE LIGHT
LACING
WHITE
BLACK
C 8740 P 52
BRASS PROPELLER TIP
TANK DRAIN BOWL
WATER OVERFLOW (TO TANK)
CLOCKWISE-ROTATED PROPELLER
HISPANO-SUIZA 220 H.P. ENGINE
STEEL TUBING-EXHAUST MANIFOLD
5'-9 3/4"
STEEL SHUTTER HOUSING
BRASS RADIATOR SHELL
TELESCOPING FOOT-STEP
VALVE-RADIATOR DRAIN
REMOVABLE SUMP COWL
STAMPED COOLING LOUVERS
BRASS COWL FASTENERS
ENGINE WATER PUMP & DRAIN
TANK FILLER CAP COVER
4'-4"
12°
AILERON HORN
AILERON CONTROL CABLE
GROMMET
RED
WHITE
BLUE
YELLOW
FOOT PLATE
ELEVATOR CONTROL CABLE
TAILSKID CONTROL CABLE
BRACE WIRE SLOT
DOUBLE ELEVATOR CABLE
DOUBLE FIXED PULLIES
NOTE:
STABILIZER INCIDENCE WHEEL CONTROLS ENDLESS CHAIN. THIS CHAIN DRIVES GEAR THAT RAISES OR LOWERS SOLID SHAFT INSIDE OF HOLLOW STERN POST. BRACE WIRES ARE FIXED TO SOLID SHAFT & RIDES THRU SLOTS.
GROUND LINE; WHEELS FULLY EXTENDED
ENGINE MOUNT TENSION WIRES
ENGINE BANK OPENING
WATER VALVE OPENING
FLEXIBLE AIR INTAKE TUBING
ENGINE MOUNTING HOLES
RADIATOR OUTLINE
WATER LINE-TO WATER PUMP
FIXED SHUTTER HOUSING
WATER LINE-TO ENGINE HEAD
WATER OVERFLOW (TUBING)
INCIDENCE WHEEL
AILERON PULLEY
ELEVATOR CONTROL CABLES
VERTICAL STABILIZER ANCHOR
ENDLESS CHAIN
AIRPLANE
METAL SEAT
SAFETY STRAP
CONTROL COLUMN
LEATHER PADDING
ENGINE CONTROLS
METAL GUN COWLING
M.G. LINK BAR CLAMP
INSTRUMENT PANEL
PLYWOOD
OVERFLOW TUBING
AILERON CONTROL CABLE
HOLLOW STERN POST
SLIDING SOLID SHAFT
BRACE WIRES SLOT
BRACE WIRES
AMMUNITION DRUM
AIRCRAFT BATTERY
SPARK CONTROL
THROTTLE CONTROL
WATER OVERFLOW
WATER OUTLET
AIR INTAKE
ENDLESS CHAIN
GEAR BOX
THREADED (SOLID SHAFT)
INCIDENCE MECHANISM
THRUST
PUMP
THRUST
A
B
C
D
E
F
G
H
J
K
L
M
SHUTTER CONTROL
ACCESS PANEL
BRACE WIRES
SHOCK CORD
STEEL TUBING
GASOLINE TANK
OIL TANK
AXLE HOUSING DOOR
RUBBER SHOCK CORD
WOODEN END HOUSING
ELEVATOR CABLE
RUDDER CABLE
FIXED PULLIES
NON-SHOCK SPRING
STABILIZER PIVOT
STEEL TUBING
INCIDENCE MECHANISM
OPEN SPACE
STEEL SHOE
ENDLESS CHAIN
CONTROL ASSEMBLY
RUDDER CONTROL BAR
CARTRIDGE CHUTE
CENTER PANEL RIB
1"
R-R
S-S
1"
T
TAIL SKID CONTROL HORN
RUDDER CONTROL HORN
VICKERS MACHINE GUN
AIRCRAFT BATTERY
NOTE:
AIR INTAKE TUBING IS WRAPPED AROUND REDUCTION GEARS ON 220 H.P. ENGINE; ON OTHER MODEL H.S. ENGINES, THE TUBING IS STRAIGHT INTO CARBURETOR MOUTH.
SYMMETRICAL ABOUT ℄
METAL BOTTOM ACCESS COWL
ENGINE MOUNTING PLATFORM
METAL ENGINE COWLING
AIRPLANE
THRUST ℄
FRONT VIEW
OIL SUMP ACCESS PANEL
WATER DRAIN VALVE ACCESS
PLYWOOD
TACHOMETER
OIL PRESS. (OUT)
THRUST ℄
GASOLINE GAUGE
SHUTTOR CONTROL
OIL TEMP. GAUGE
HAND-PUMP
RUDDER CONTROL
AILERON CABLE
FLOORBOARD
M.G. LINK BAR CLAMP
CLOCK
ALTIMETER
OIL PRESSURE (IN)
ELECTRICAL UNIT
COMPASS
WATER TEMP.
BANK & TURN
CARTRIDGE CHUTE
ENGINE CONTROL ASSEMBLY
STABILIZER INCIDENCE WHEEL
PLYWOOD SIDING
METAL SUMP COWL
PLYWOOD WEBBING
GUN CONTROL
AILERON CABLE
RUDDER CABLE PULLEY
ELEVATOR CABLE PULLIES
WATER INLET PIPE
HEADREST CUSHION
BAGGAGE DOOR
SAFETY STRAP
MOUNTING LUG
GASOLINE TANK
STABILIZER PIVOT
RUDDER CABLE PULLEY
ELEVATOR CABLE PULLEY
AIR AGE INC., 551 FIFTH AVE., NEW YORK 17, N.Y.
SCALE: 1/2" = 1'-0"
DATE: OCTOBER '44
DRAWN BY ... W.A.WYLAM
S.E.5A
FUSELAGE DETAILS

Model	Engine	H.P.	Gearing	Propeller
S.E.5	Hispano-Suiza	150	Direct	2 Bladed
S.E.5A	Hispano-Suiza	180	Direct	2 Bladed
S.E.5A1	Woolsey "Viper"	180	Direct	2 Bladed
S.E.5A2	Hispano-Suiza	220	Reduction	4 Bladed

S.E.5A - Elliptical Prop.
S.E.5A1 - Offset Prop.
S.E.5 - Square Tip Prop.

Water Valve
Air Intake
Outline 150-180 Hispano-Suiza Engine
21'-3"
8'-0" Dia.
Counter-Clockwise Propeller Rotation
On S.E.5 Only

11'-0"
Brace Wire
Elevator Control Cable
Grommet
Transparent Panel
Double Elevator Cables

1½"
B-B
C-C
Chord
5'-0
Aileron Hinge
10¼" ℄ 2'-4" ℄
Section A-A

Hinge
Solid Spruce Spars
A
11½" ℄ To ℄
¼"
C
B
Solid Compression Ribs
Tension Wires
False Rib
Opening For M.G. Link Bar
Fixed Single Pulley
Single Aileron Cable

Grommet
Aileron Cable
Aileron Hinge
Turnbuckle
Pitot Assembly
Aileron Horn
Yellow
Blue
White
Red
Plywood Center Panel
Exhaust Manifold
Removable Top Cowl
Radiator Shell
Shutter Housing
Tank Drain Bowl
Water Expansion Tank
Tank Cap
Overflow Tubing
Water Valve - Engine Drain
Aileron Cable (To Control) Lower Wing
Aileron Cable (To Opposite Aileron)
Transparent Panel (Lower Surface) Upper Wing
Transparent Panel (Upper Surface) Lower Wing

26'-8 Span
7'-9" Dia. Propeller
4'-0"
Optional Shutter Design
Screened Air Intake
Valve - Radiator Drain
Removable Access Panel
Rubber Shock Cord
Aileron Gap Wire
Door
Axle Housing
End Housing
5'-0" Tread

Door Held Shut By Airstream
Hinge
Door
A-A
Wooden Rib
Fabric Cover
Airplane ℄
Spreaders
℄ Wheel & Axle

Note:
Entire landing gear chassis assembly is rigidly attached to fuselage. Wheel & axle are one assembly. It is held to chassis by rubber shock cords.

Color Scheme
Propeller, Landing Gear — Dull Black
Fuselage & Vertical Stab'r - Khaki
Wings & Horizontal Stab'r. - Buff
Wing Struts, Fuselage Frame - Varnish
Tension Wires, Fittings, Etc. — Aluminum

27½" x 4" Tire
Steel Collar
Bronze Bearing
Fixed Face Plate
Shock Cord Grips
Axle Shaft
Tire
Rim
Nut
Wheel & Axle Assembly

Fixed Side Struts
Fixed Spreaders
Fixed Brace Wires
Wheel & Axle ℄
Landing Gear Chassis Design

AIR AGE INC., 551 FIFTH AVE., NEW YORK 17, N.Y.
Scale: ¼" - 1'-0"
Date: October [illegible]
Drawn by ... W.A. WYLAM
General Arrangement
S.E.5A

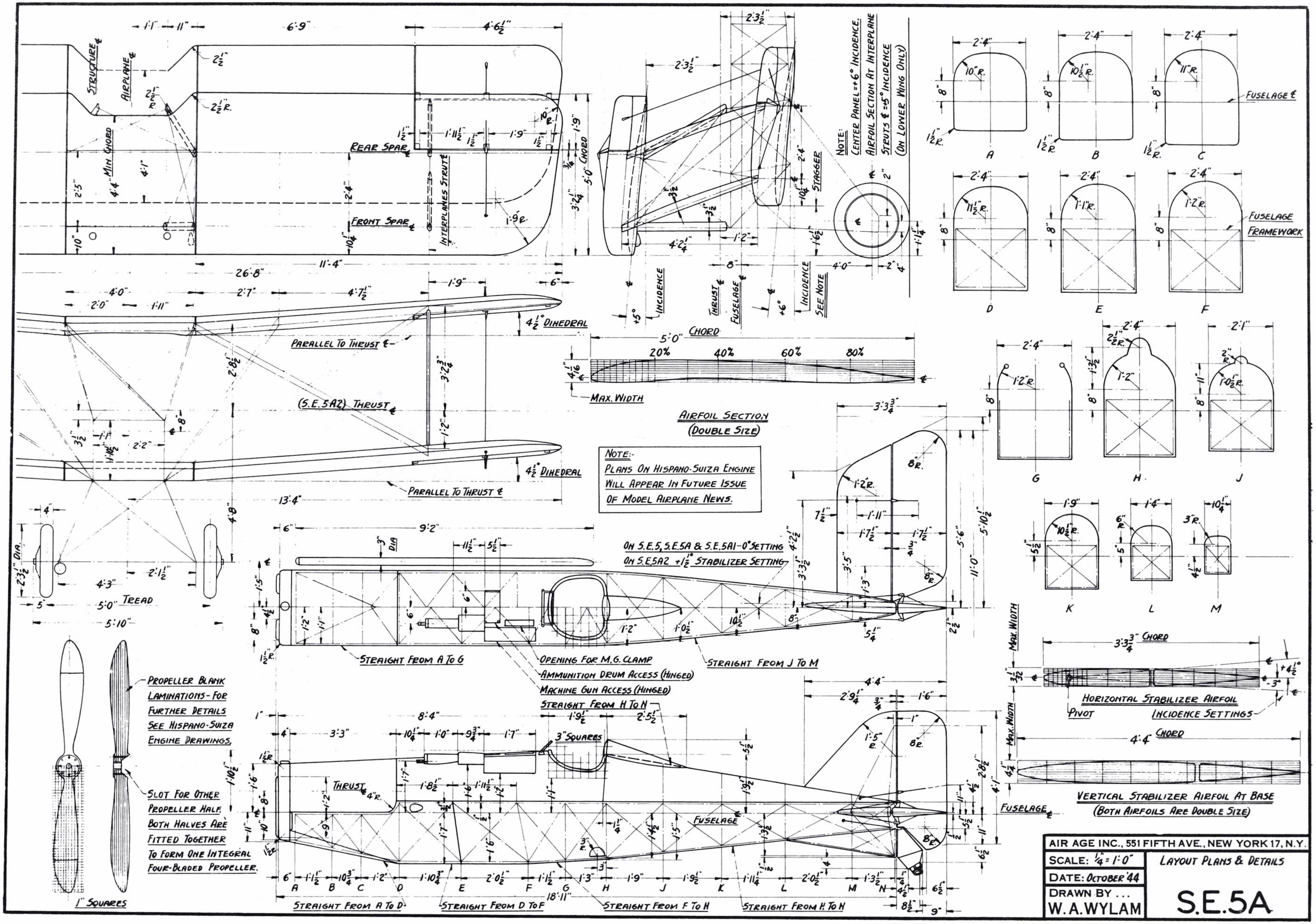

AIR AGE INC., 551 FIFTH AVE., NEW YORK 17, N.Y.	
SCALE: 1/4" = 1'0"	LAYOUT PLANS & DETAILS
DATE: OCTOBER '44	
DRAWN BY ... W. A. WYLAM	S.E.5A

THE TERM "S.E." MEANS SCOUTING EXPERIMENTAL; NOT SOPWITH EXPERIMENTAL AS BELIEVED BY MOST W.W.I FANS. SOPWITH HAD NOTHING TO DO WITH THE S.E.-5; I WISH TO CORRECT THIS ERROR THAT WAS ON THE ORIGINAL DRAWINGS (DECEMBER 1944 M.A.N.) THE WING DIMENSIONS GIVEN IS CORRECT FOR THE S.E.-5A ONLY; THIS WAS DUED TO THE CLOSING OF THE GAPS ($\frac{1}{2}$") WHERE THE WING PANELS WERE ATTACHED TO THE FUSELAGE, AND TO THE CENTER PANEL. (SPAR ATTACHMENT FITTINGS WERE RE-DESIGNED FOR THE S.E.-5A).

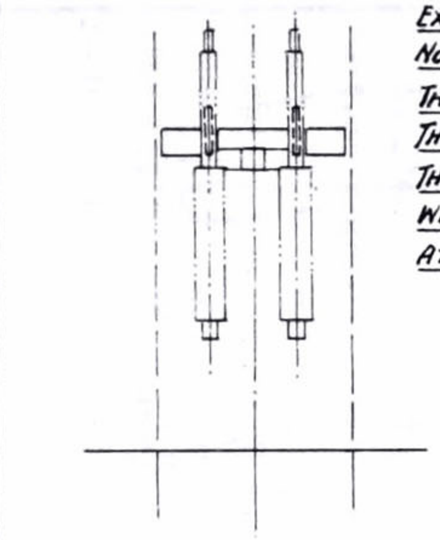

BY PULLING TRIP WIRE IN COCKPIT, THE LEWIS GUN CAN BE PULLED DOWN ON GUN RAIL BY HAND (FOR RE-LOADING). GUN CAN BE SET IN ANY VERTICAL ANGLE (FROM PROPELLER DISC UP TO 45° BY TIGHT PIVOT & LOCK

1915 OR M1919 LEWIS
GUN CONTROL WIRE (OPTIONAL)
TRIP WIRE
LARGE WINDSHIELD
ALDIS GUN SIGHT TUBE (OPTIONAL)
MACHINE GUN BRIDGE
AMMUNITION BOX
EMPTY BELT CASE
EMPTY SHELL CHUTE

TWIN VICKERS MACHINE GUN INSTALLATION

NOTES:
SERIAL NUMBERS WERE PAINTED ON THE FIN OR RUDDER; AND SOMETIMES ON THE FUSELAGE SIDES. FLIGHT COLORS WERE PAINTED ON SHUTTERS, ENGINE COWLS, RADIATOR SHELL, OR WHEEL DISCS.

U.S.A. (KELLY FIELD)
RED
WHITE
BLUE
ORANGE-YELLOW UPPER & LOWER SURFACES OF WINGS & HORIZ. STAB.

U.S.A. (OVERSEAS)
RED
WHITE
BLUE
R.A.F.
WHITE OR BLACK TRIM
No. 1 SQUADRON (R.A.F.)
PILOT IDENTIFICATION (R.A.F.)
U.S.A'S PILOT NUMBER IN SAME POSITIONS

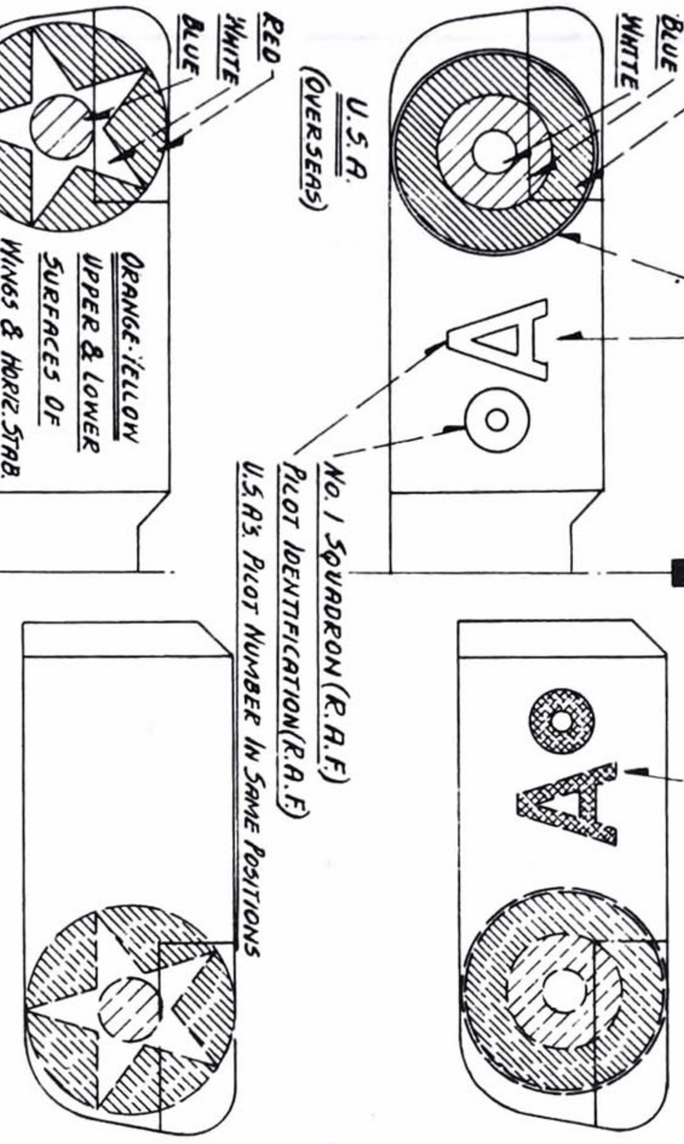

S.E.-5 ONLY (BOTTOM SURFACE OF LOWER WING)

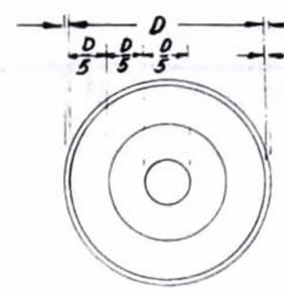

MAX. DIAMETER
EDGE TRIM (WING COCKADES) $\frac{3}{4}$"
EDGE TRIM (FUSELAGE COCKADES) $\frac{1}{4}$"
THE WING COCKADE'S MAX. DIA. WAS 4'-11"; THE FUSELAGE COCKADE'S MAX. DIA. WAS 1'-6". THE EARLY COCKADES HAD NO EDGE TRIM; EDGE TRIM WAS WHITE OR YELLOW.

$\frac{1}{2}$" FROM WING EDGES
WHITE IDENTIFICATION LETTER
WHITE (SAME POSITION ON BOTTOM SURFACE OF FUSELAGE - NO SQUADRON MARKINGS ON WINGS)
BLACK IDENTIFICATION LETTER OR NUMBER SAME COCKADE WITH OR WITHOUT EDGE TRIM (BOTTOM SURFACE OF LOWER WING)

UPPER & LOWER SURFACES OF WING & HORIZ. STABILIZER WERE BUFF (BEFORE 1916); AFTER 1916, THE UPPER SURFACES WERE ALL KHAKI WITH BUFF ON THE LOWER SURFACES OF THE WINGS AND THE HORIZONTAL STABILIZER.

EITHER ALL BLACK WITH WHITE TRIM, ALL WHITE, OR ALL BLACK (INDEX LETTER WAS SEPERATED WHEN ENTIRE SERIAL NUMBER WAS ON ONE LINE)

EITHER ALL WHITE OR ALL BLACK (NIGHT FLIGHTS)

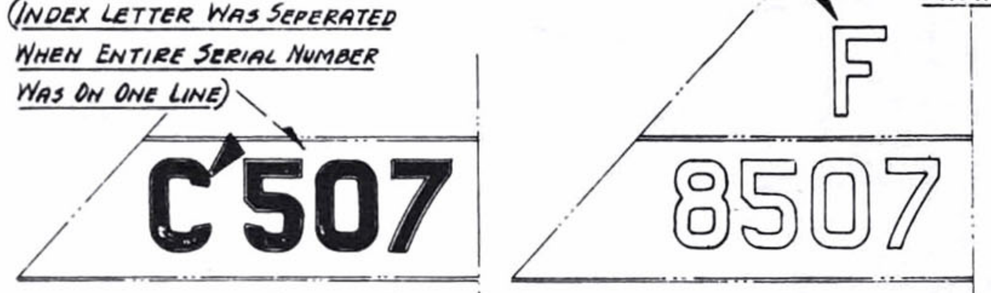

TYPICAL VERTICAL STABILIZER MARKINGS

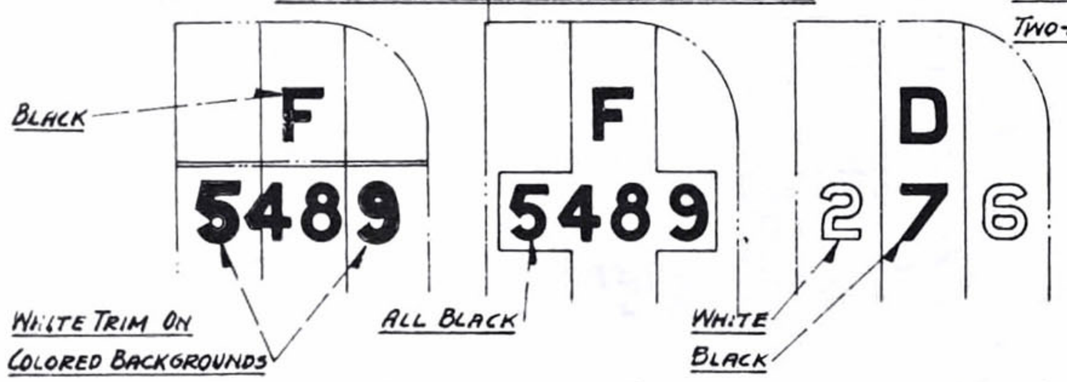

WHITE TRIM ON COLORED BACKGROUNDS
ALL BLACK
WHITE
BLACK

TYPICAL RUDDER MARKINGS



WHITE WITH BLACK TRIM, ALL WHITE OR ALL BLACK
ALL BLACK ON WHITE RECTANGULAR PANEL

TYPICAL FUSELAGE MARKINGS (AFT OF COCKADE)

AMERICAN SQUADRONS WITH THE R.A.F. HAD SAME COLOR JOB AS THE S.E.-5A. WITH CHANGE ON COCKADES.

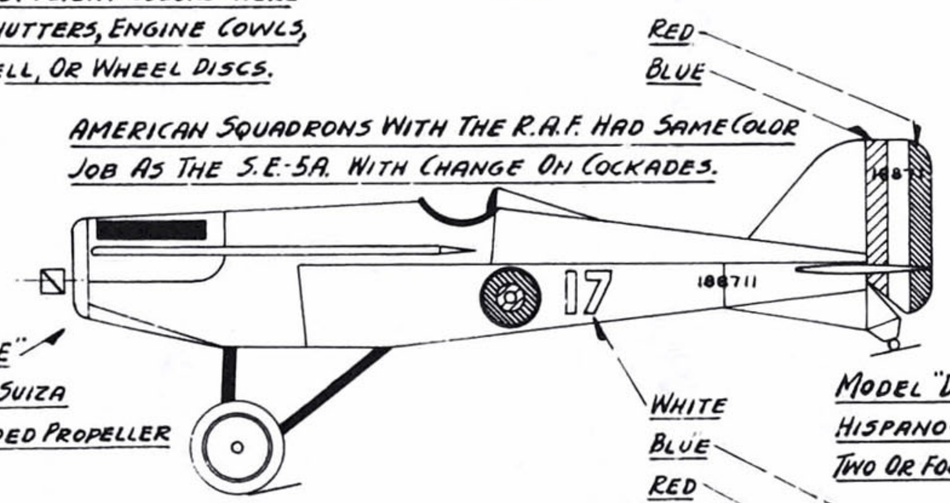

MODEL "E" HISPANO-SUIZA TWO-BLADED PROPELLER
WHITE
BLUE
RED

MODEL "D" & "E" HISPANO-SUIZA TWO OR FOUR BLADED PROP.
BLACK (STEEL)
KHAKI DISC

AMERICAN TRAINING S.E.-5A'S AT KELLY FIELD HAD KHAKI FUSELAGE AND VERTICAL STABILIZER. THE WINGS AND HORIZONTAL STABILIZER WERE ALL ORANGE-YELLOW

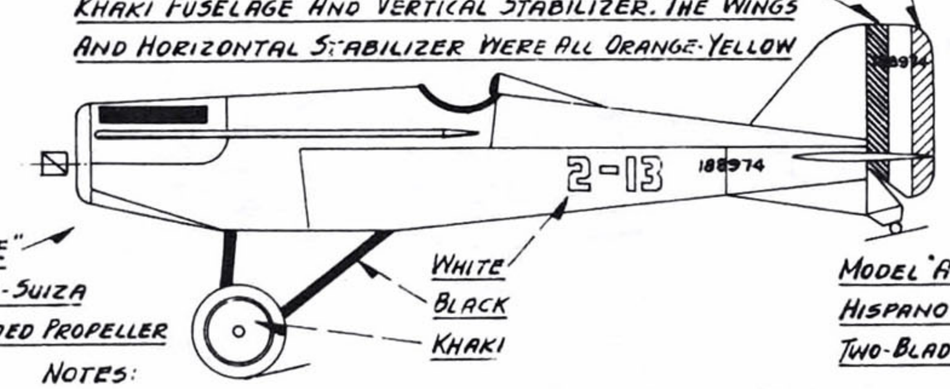

MODEL "E" HISPANO-SUIZA TWO-BLADED PROPELLER
WHITE
BLACK
KHAKI

MODEL "A" SERIES HISPANO-SUIZA TWO-BLADED PROPELLER
KHAKI (WOOD)
SILVER OR KHAKI

21'-3" S.E.-5A ONLY

ENTIRE FUSELAGE, VERT. STAB., & WING STRUTS WERE KHAKI. BLACK PROPELLER

HEADREST WAS OPTIONAL ON S.E.-5 & S.E.-5A

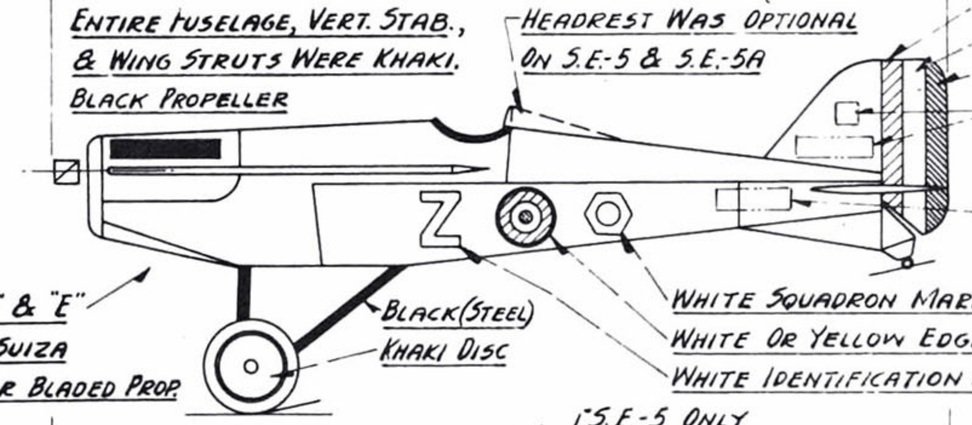

BLUE
WHITE
RED
SERIAL NUMBER POSITIONS

WHITE SQUADRON MARKINGS
WHITE OR YELLOW EDGE TRIM
WHITE IDENTIFICATION LETTER OR NUMBER

20'-10½" S.E.-5 ONLY

EARLY S.E.-5 WERE ALL SILVER WITH KHAKI WING STRUTS AND LANDING GEAR (LATE S.E.-5 WERE ALL KHAKI)

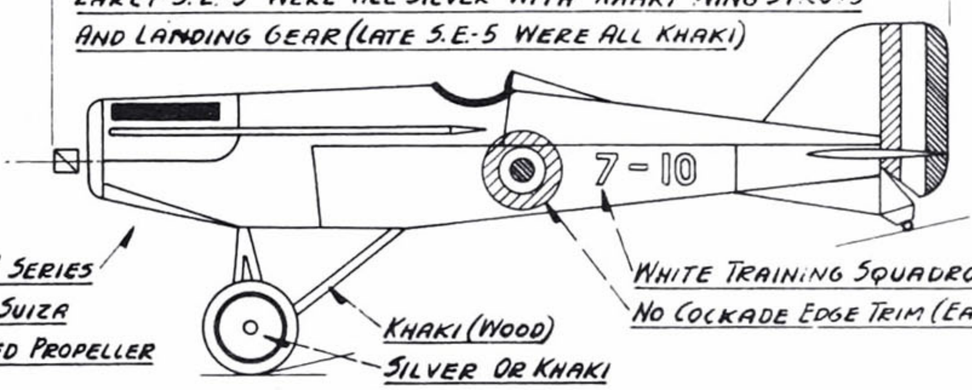

WHITE TRAINING SQUADRON NUMBERS
NO COCKADE EDGE TRIM (EARLY S.E.-5)

NOTES:
IT IS ALMOST IMPOSSIBLE TO LIST ALL SQUADRONS AS TO THIER EQUIPMENTS SUCH AS SINGLE OR TWIN VICKERS, 1915 OR M1919 LEWIS, TWO OR FOUR BLADED PROPELLER, SMALL OR LARGE WINDSHIELD, DIRECT OR REDUCTION GEARED ENGINE (S.E.-5A OPTIONAL), WITH OR WITHOUT HEADREST, OR CORRECT SERIAL NUMBERS FOR THE MISSING SQUADRONS (WERE REMOVED FROM PHOTOGRAPHS BY CENSORS OF WORLD WAR I). THE KNOWN SQUADRONS THIER SERIAL NUMBERS, AND PILOT'S IDENTIFICATIONS & NUMBERS ARE ON THE SQUADRON MARKING PAGE.
THANKS TO OWEN G. THETFORD & LEONARD BRIDGEMAN OF PADGATE & LONDON, ENGLAND.

AIR AGE INC., 551 FIFTH AVE., NEW YORK 17, N.Y.	
SCALE:	COLOR SCHEME DETAILS U.S.A. AND R.A.F.
DATE:	
DRAWN BY ... W.A.WYLAM	S.E.-5

drawings by WILLIAM WYLAM

RAF S.E.5a Squadron Markings

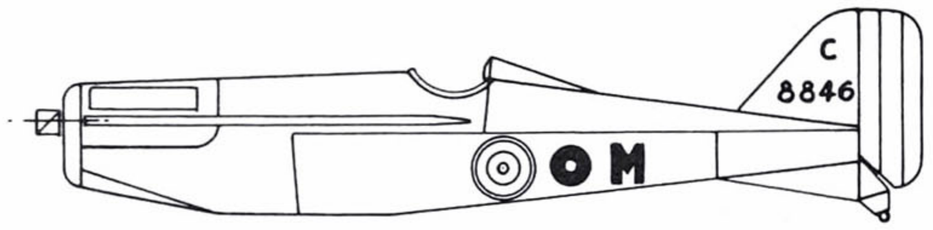

No. 1 Squadron

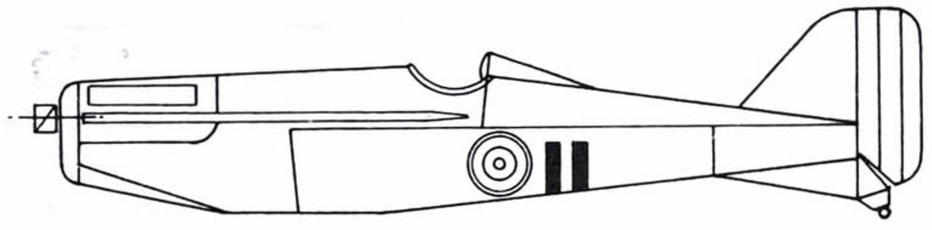

No. 41 Squadron

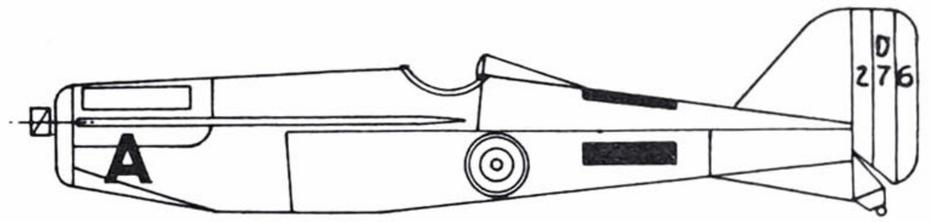

Captain Mannock's S.E.-5A

No. 74 Squadron

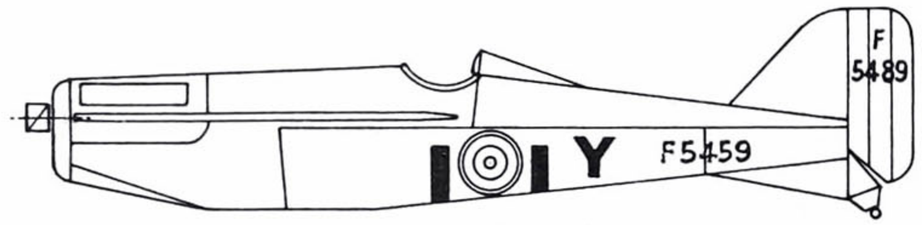

No. 24 Squadron

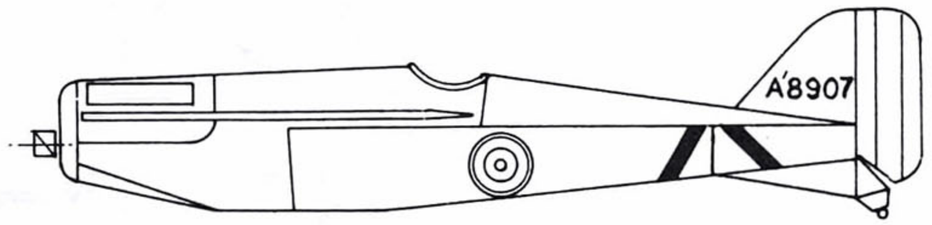

Captain Ball's S.E.-5

No. 56 Squadron

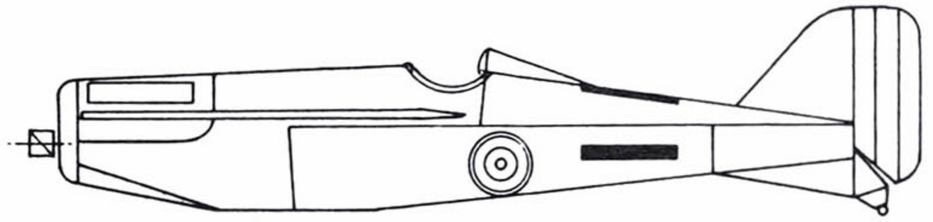

No. 84 Squadron

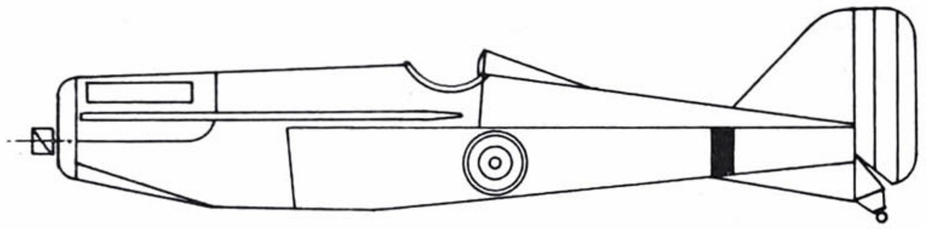

No. 29 Squadron

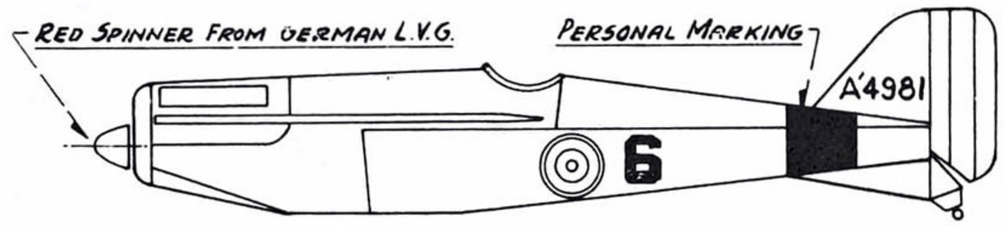

Captain McCudden's S.E.-5

No. 56 Squadron

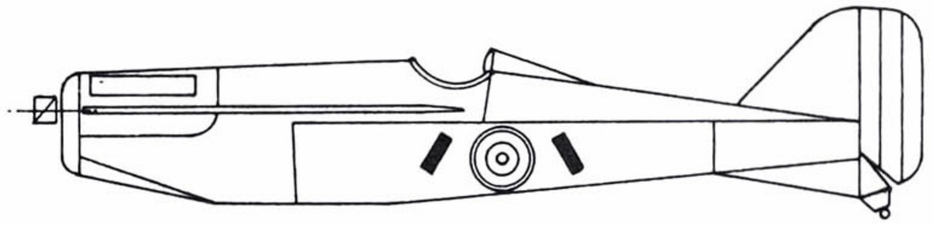

No. 84 Squadron

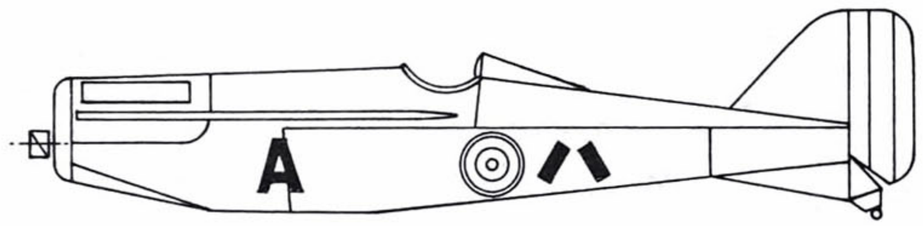

No. 32 Squadron

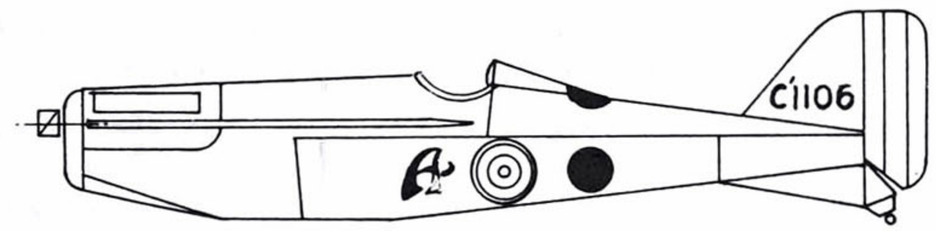

No. 60 Squadron

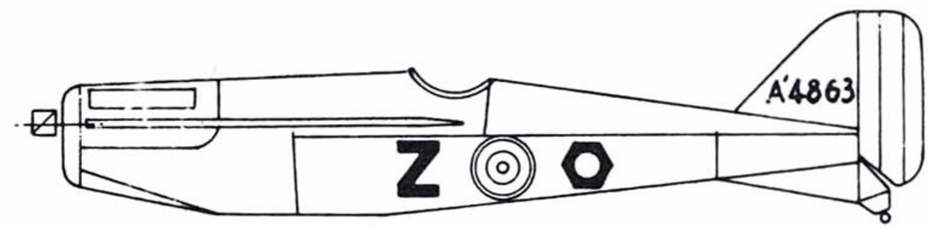

No. 85 Squadron

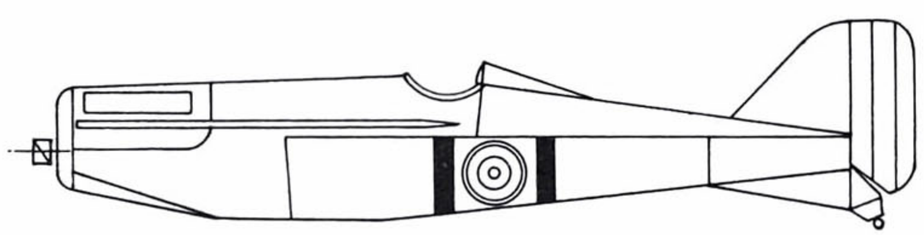

No 40 Squadron

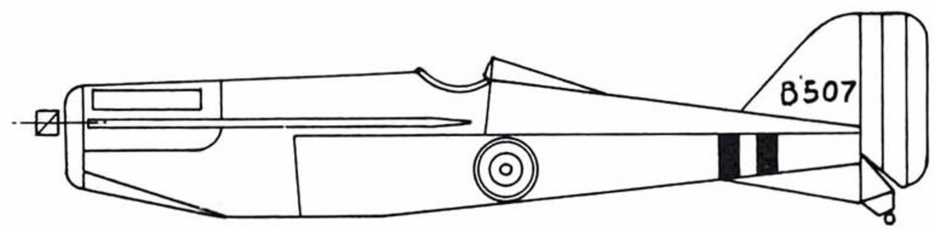

No. 60 Squadron

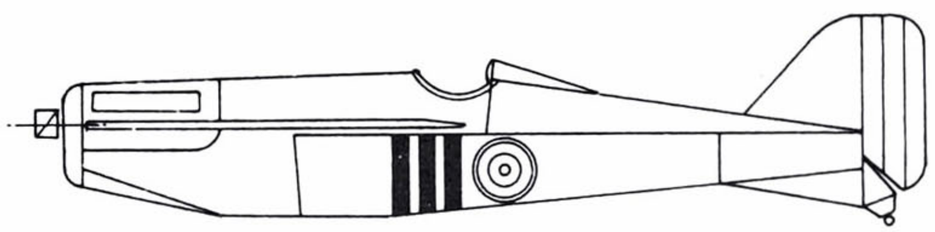

No 32 Squadron

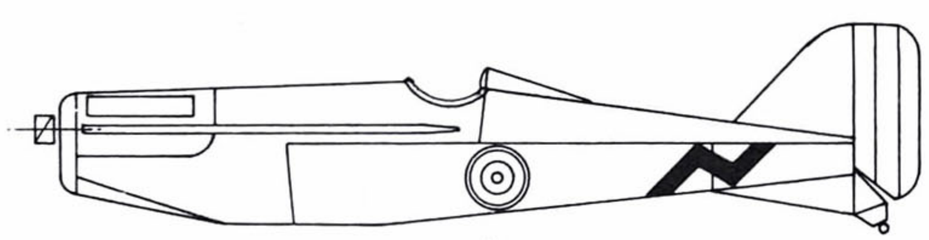

No. 40 Squadron

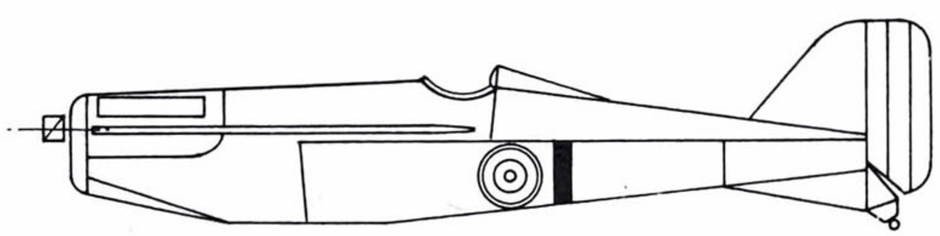

No 64 Squadron

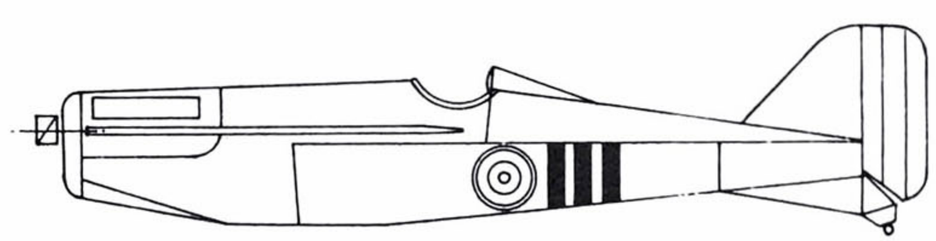

No 94 Squadron

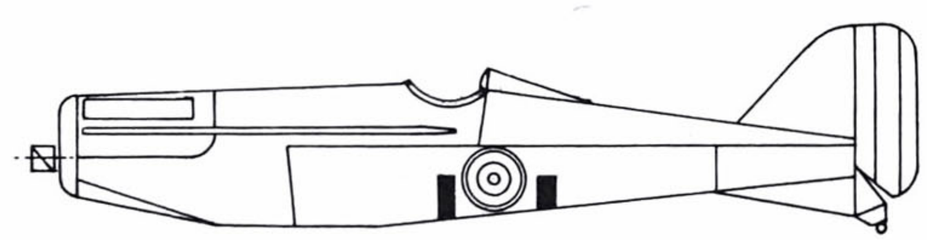

No. 41 Squadron

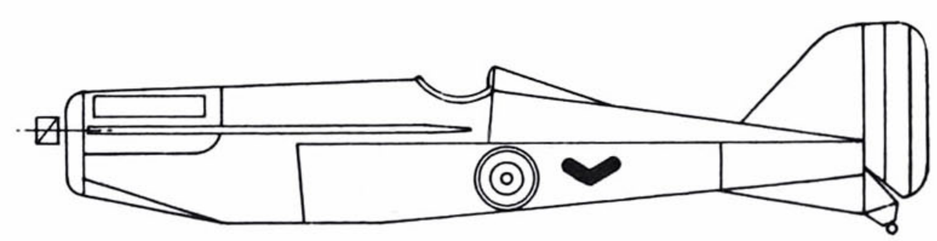

No 68 Squadron

Full Credit Is Given To Mr Owen Thetford Of Padgate, England, For This Tedious Work.

AIR AGE INC., 551 FIFTH AVE., NEW YORK 17, N.Y.	
SCALE:	Squadron Markings Royal Air Force
DATE:	
DRAWN BY ... W.A.WYLAM	S.E.-5

Salmson Bomber 2 A.2

drawings by RICHARD ANDERSON

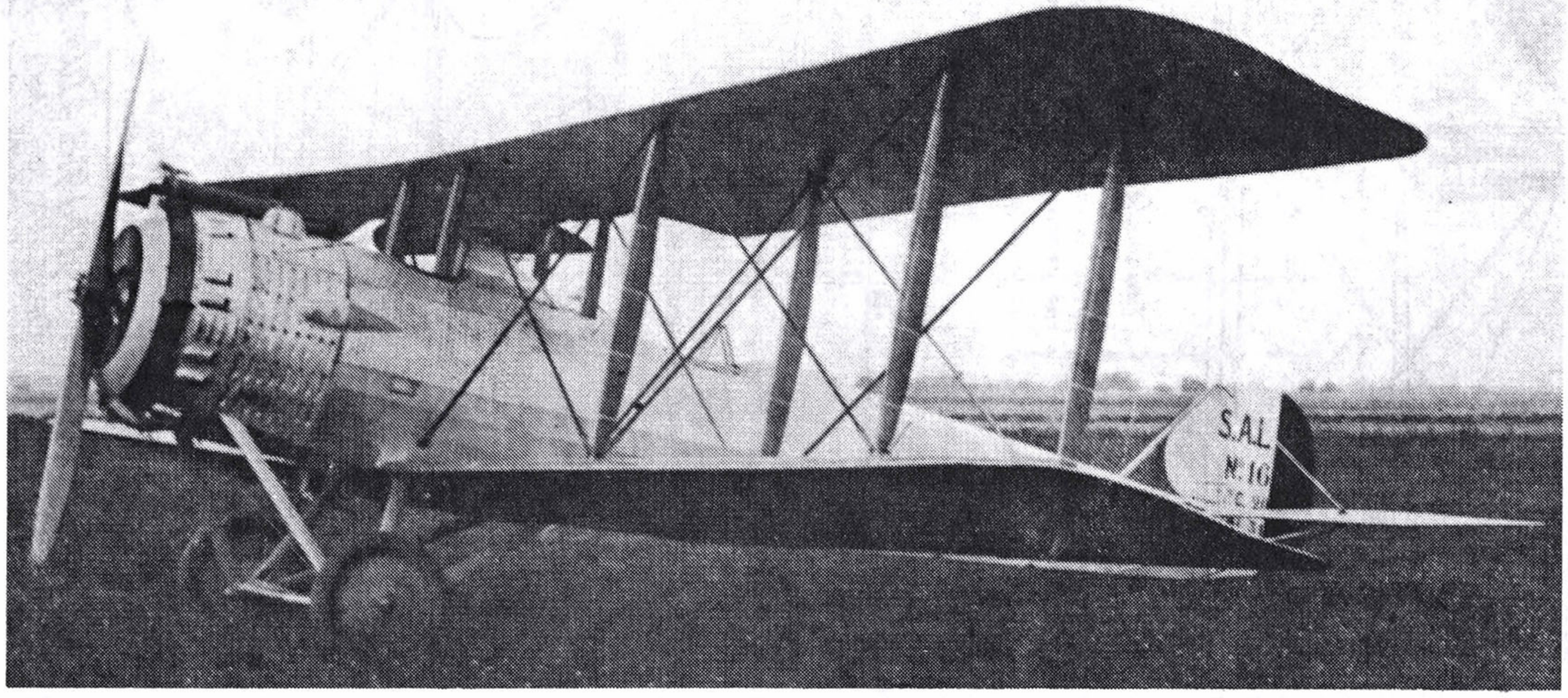

A brute in appearance, yet very maneuverable, the 2.A2 was known for its ability to fly and fly well. "A.A.H.S. Journal" photo.

BUILT by the French firm Societe des Moteurs Salmson, the 2 A.2 was considered by many to be one of the best two-seat fighters developed by any nation during the last half of WW I.

The aircraft featured dive-brakes between the landing gear legs under the fuselage, but the most unusual feature was the 9-cylinder water-cooled radial, the Salmson 9Z. When confronted by this new mechanical apparition, the French Air Ministry was somewhat taken aback, but still supported it, particularly because financing was accomplished entirely through private channels.

The 2 A.2 was intended for use as an Army cooperation type, to carry out any one of several jobs as required. In this respect it was intended to take up where the Sopwith 1½ Strutter left off and to carry on to meet advanced specifications.

The vast majority of pilots who flew it during WW I agree that it was a first-class airplane with few faults and lots of "flyability." Takeoff was relatively short, and the ship landed at about 45 mph tail high and at 40 mph, three-point. What endeared it most to pilots was its long, flat glide, which saved many a crew who lost an engine far out over the lines.

Two survive; one in Belgium, the other in Japan. □

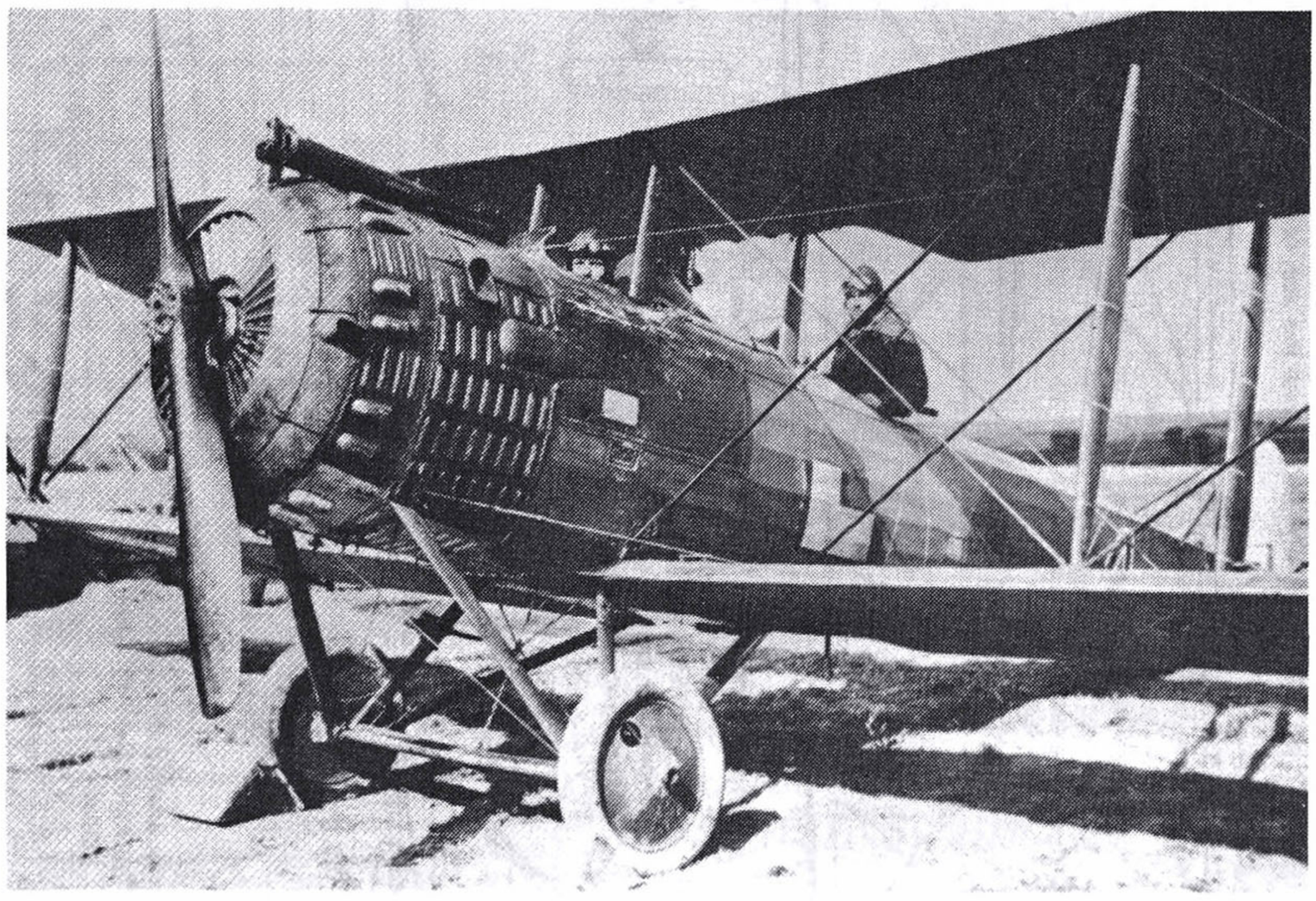

The Salmson 2A.2 was a large airplane that proved a favorite due to its good handling qualities. "A.A.H.S. Journal" photograph.

THE "AMERICANIZED" SALMSONS SHOWN HERE WERE IDENTIFIED WITH U.S. ROUNDELS, i.e. OUTER CIRCLE RED, THEN MEDIUM BLUE, AND A WHITE CENTER. THE FORWARD RUDDER STRIPE WAS RED, CENTER WHITE, AND TRAILING STRIPE BLUE. CABANE AND INTERPLANE STRUTS WERE OF WOOD & DARKLY VARNISHED.

THE EXHAUST RING SHOULD BE NATURAL RUST IN COLOR. THE SHUTTERS AND FRONT SHELL RING WERE USUALLY DARK GREEN. #5464'S WAS NATURAL ALUM.

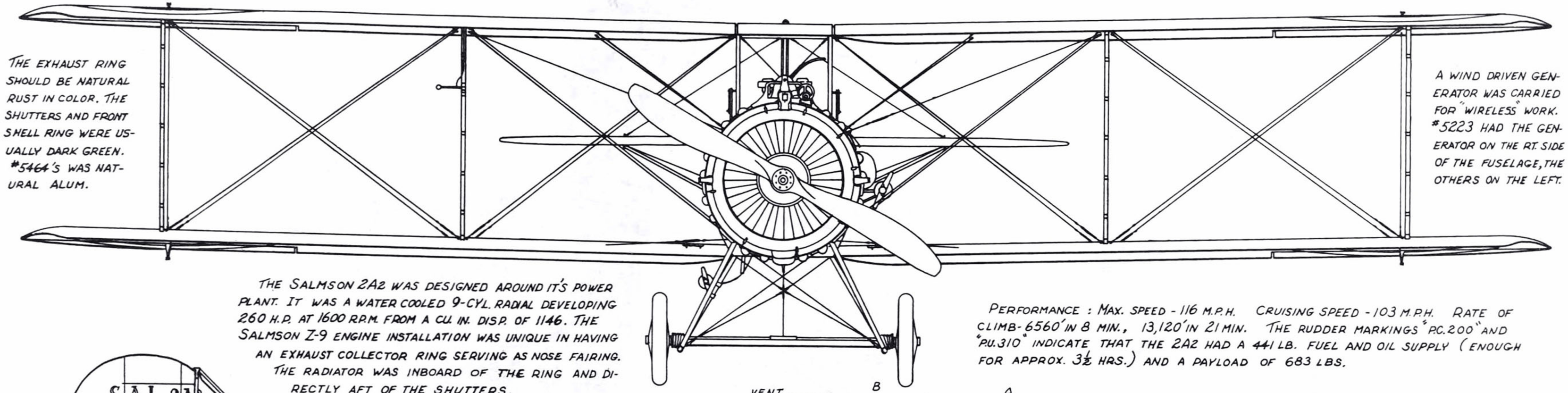

A WIND DRIVEN GENERATOR WAS CARRIED FOR "WIRELESS" WORK. #5223 HAD THE GENERATOR ON THE RT. SIDE OF THE FUSELAGE, THE OTHERS ON THE LEFT.

THE SALMSON 2A2 WAS DESIGNED AROUND IT'S POWER PLANT. IT WAS A WATER COOLED 9-CYL. RADIAL DEVELOPING 260 H.P. AT 1600 R.P.M. FROM A CU. IN. DISP. OF 1146. THE SALMSON Z-9 ENGINE INSTALLATION WAS UNIQUE IN HAVING AN EXHAUST COLLECTOR RING SERVING AS NOSE FAIRING. THE RADIATOR WAS INBOARD OF THE RING AND DIRECTLY AFT OF THE SHUTTERS.

PERFORMANCE : MAX. SPEED - 116 M.P.H. CRUISING SPEED - 103 M.P.H. RATE OF CLIMB - 6560' IN 8 MIN., 13,120' IN 21 MIN. THE RUDDER MARKINGS "P.C.200" AND "P.U.310" INDICATE THAT THE 2A2 HAD A 441 LB. FUEL AND OIL SUPPLY (ENOUGH FOR APPROX. 3½ HRS.) AND A PAYLOAD OF 683 LBS.

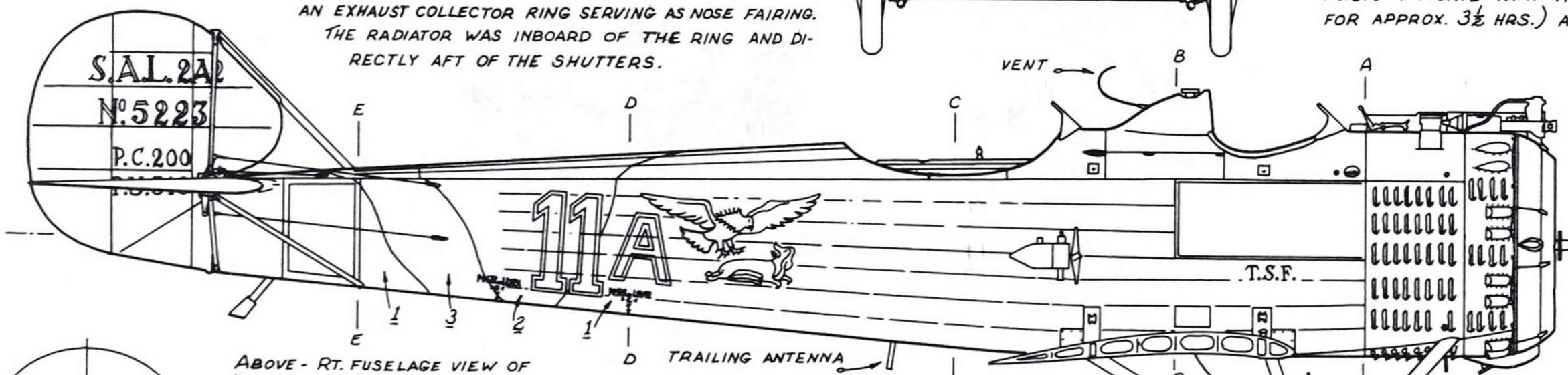

ABOVE - RT. FUSELAGE VIEW OF #5223 OF THE 24TH ARMY OBS. SQDN.

BELOW - FUSELAGE MARKINGS OF SHIPS #5433 AND #5464 OF THE 1ST CORPS. OBS. SQDN.

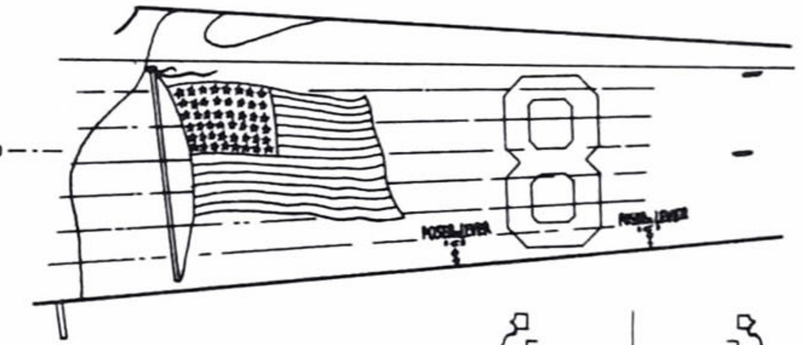

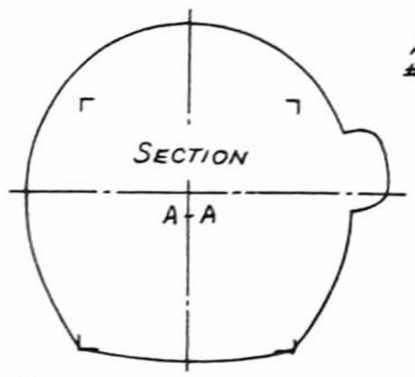

TWICE SCALE
"LIFT HERE" → POSER 2nd LEVER "C"

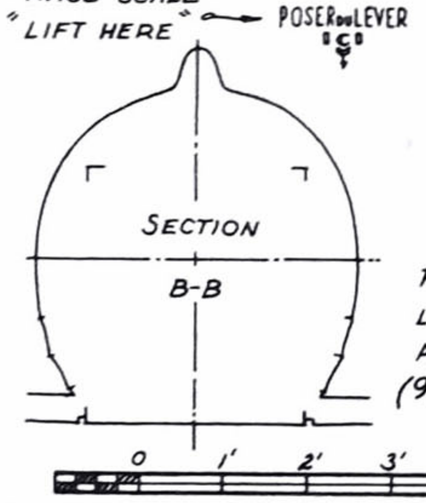

FRONT, TOP, AND LEFT SIDE VIEWS ARE OF #1060. (91ST ARMY OBS. SQDN.)

0 1' 2' 3' 4' 5' 6' 7'

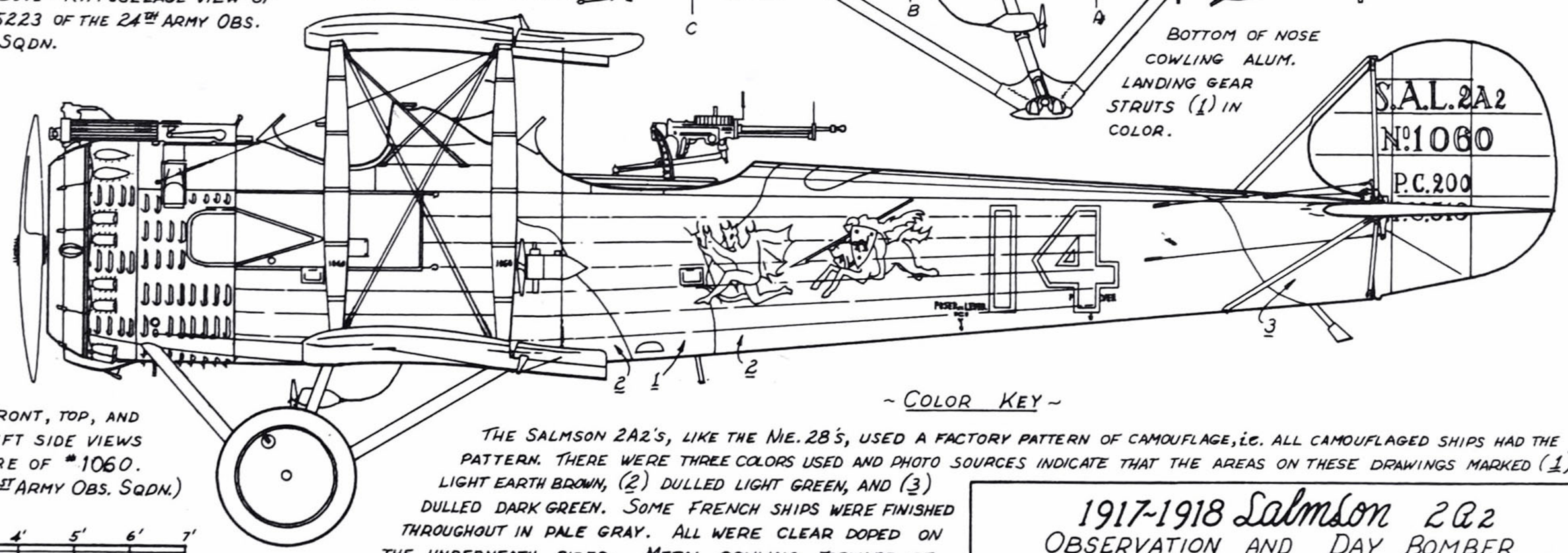

BOTTOM OF NOSE COWLING ALUM. LANDING GEAR STRUTS (1) IN COLOR.

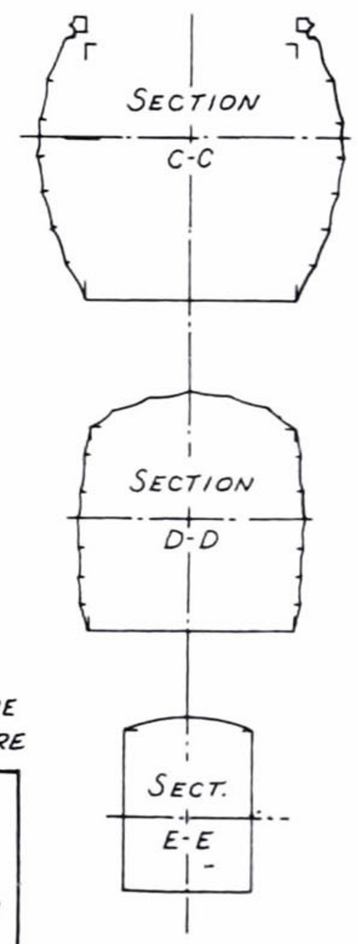

~ COLOR KEY ~

THE SALMSON 2A2'S, LIKE THE NIE. 28'S, USED A FACTORY PATTERN OF CAMOUFLAGE, i.e. ALL CAMOUFLAGED SHIPS HAD THE SAME PATTERN. THERE WERE THREE COLORS USED AND PHOTO SOURCES INDICATE THAT THE AREAS ON THESE DRAWINGS MARKED (1) WERE LIGHT EARTH BROWN, (2) DULLED LIGHT GREEN, AND (3) DULLED DARK GREEN. SOME FRENCH SHIPS WERE FINISHED THROUGHOUT IN PALE GRAY. ALL WERE CLEAR DOPED ON THE UNDERNEATH SIDES. METAL COWLING FORWARD OF THE REAR COCKPIT WAS NORMALLY (3) IN COLOR.

1917-1918 Salmson 2A2
OBSERVATION AND DAY BOMBER
MFGD. BY Societe des moteurs Salmson
OF Billancourt (Seine)

PLATE 1 OF 2 DRAWN BY R. Anderson

12-61

PERSPECTIVE VIEW OF STABILIZERLESS TAIL ASSY. OF SHIP #5433 OF THE 1ST CORPS. OBS. SQDN. THERE WAS ANOTHER SHIP (#5464) THAT USED IDENTICAL MARKINGS THROUGHOUT WITH THE EXCEPTION OF THE SERIAL NUMBERS ON THE STRUTS AND RUDDER.

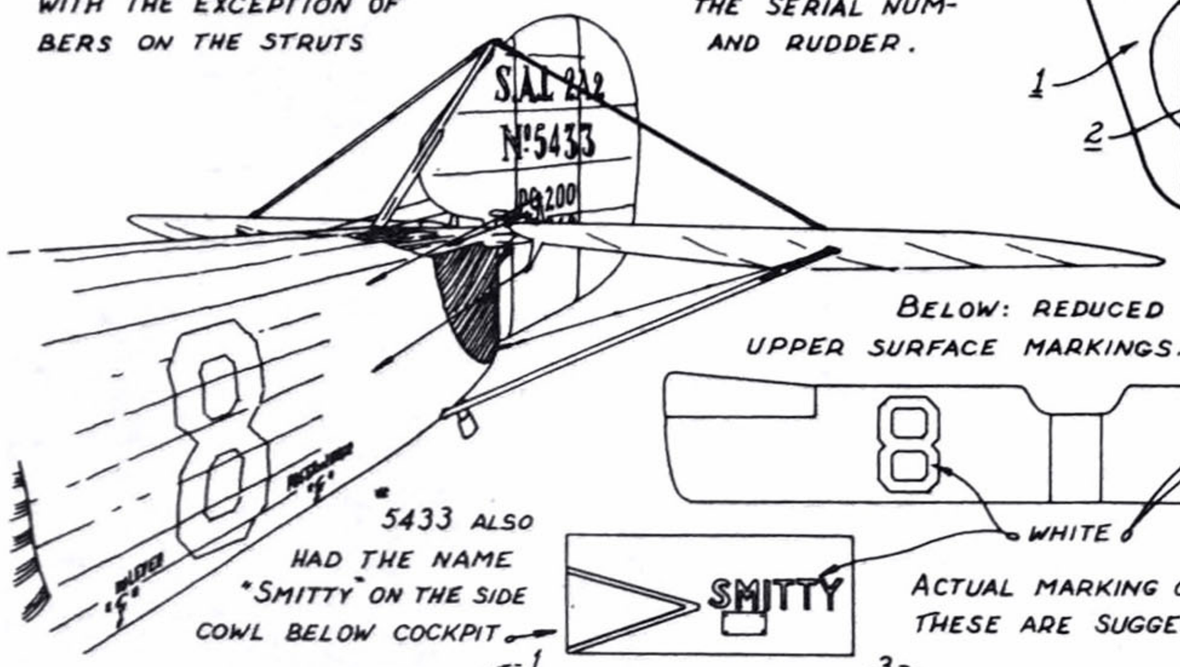

BELOW: REDUCED VIEW OF UPPER SURFACE MARKINGS. (5433 & 5464)

5433 ALSO HAD THE NAME "SMITTY" ON THE SIDE COWL BELOW COCKPIT

ACTUAL MARKING COLORS UNKNOWN: THESE ARE SUGGESTED.

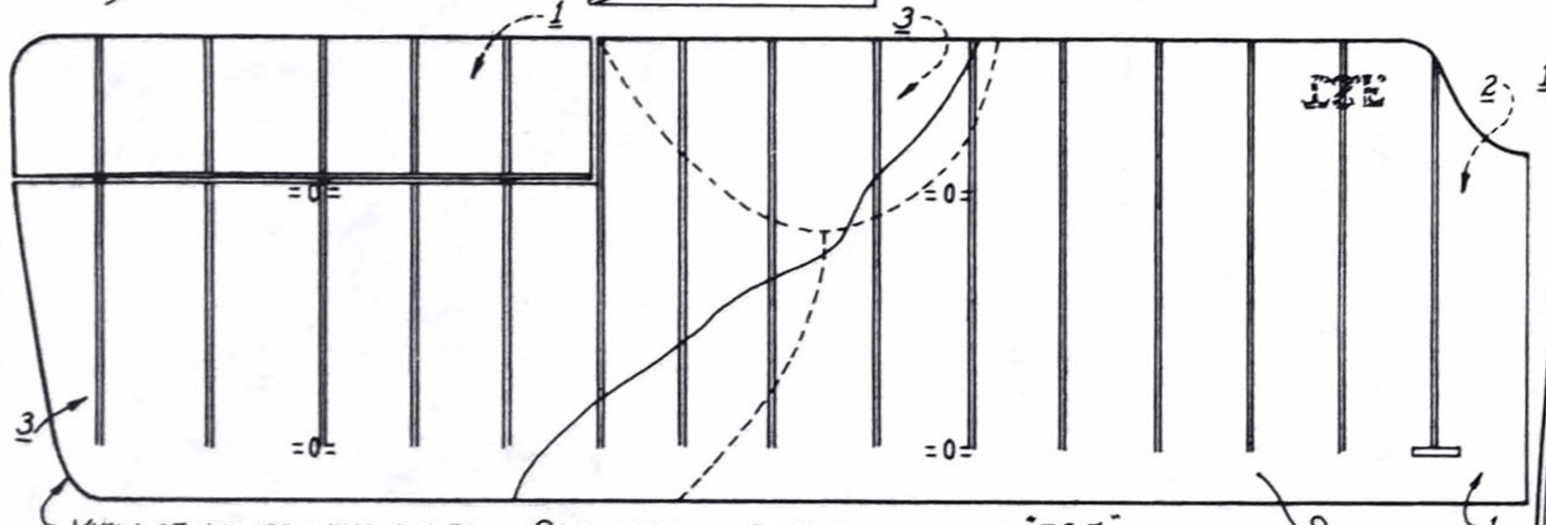

VIEW OF LOWER WING PANEL. CAMOUFLAGE PATTERN AND THE "T.S.F." LOCATION ON THE LEFT LOWER WING ARE SHOWN IN THIS VIEW WITH DOTTED LINES.

THE NUMERALS "11" AND "11A" APPEAR TO BE BLACK WITH A WHITE PIN STRIPE. RUDDER IDENTIFICATION AND DATA NUMERALS AND LETTERS WERE BLACK.

PERSPECTIVE VIEW OF SHIP #5223 OF THE 24TH ARMY OBS. SQDN. THE DIAGONAL MARKINGS ON THE LEFT UPPER WING WERE PROBABLY BLACK, RED, AND BLACK.

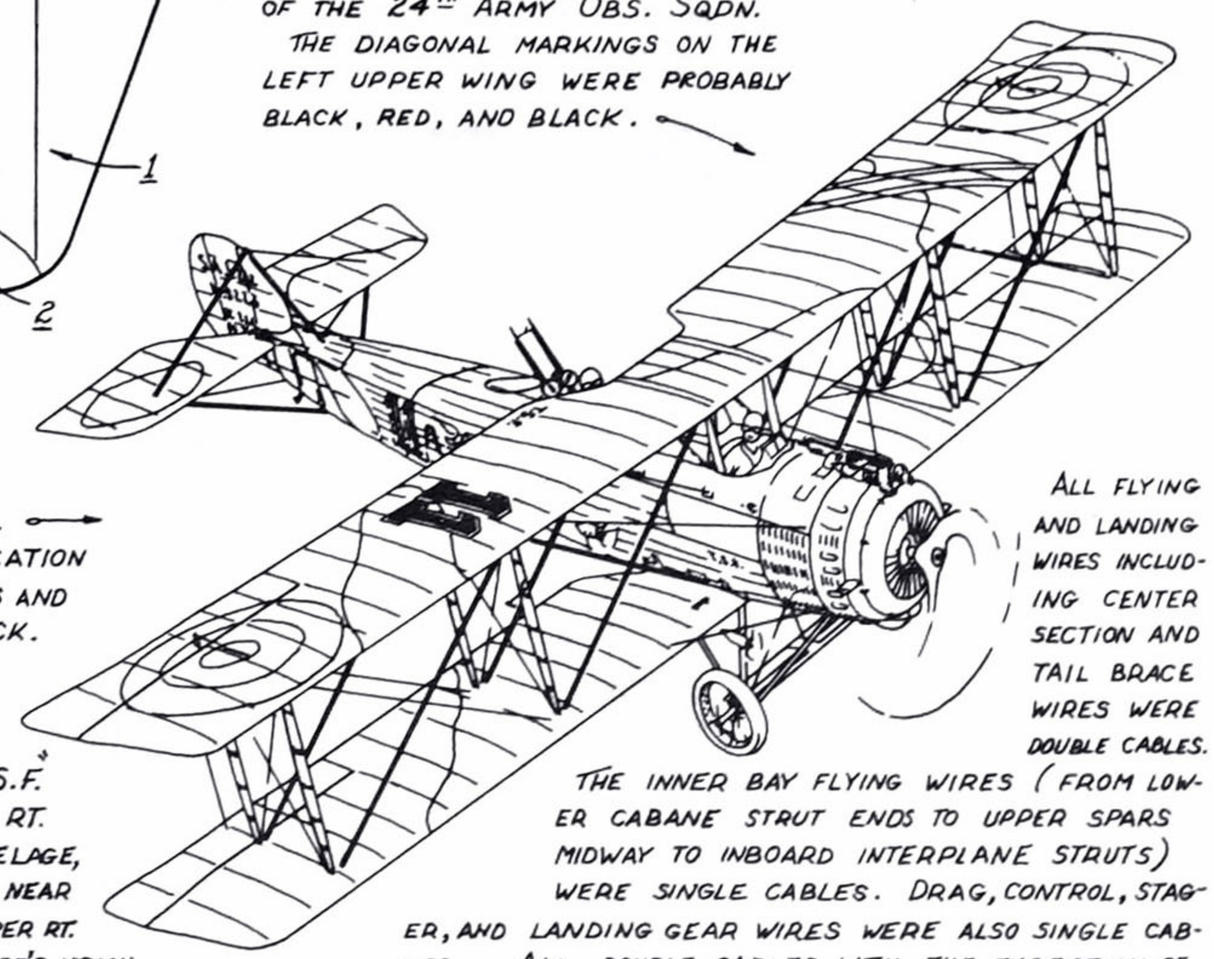

ALL FLYING AND LANDING WIRES INCLUDING CENTER SECTION AND TAIL BRACE WIRES WERE DOUBLE CABLES.

THE INNER BAY FLYING WIRES (FROM LOWER CABANE STRUT ENDS TO UPPER SPARS MIDWAY TO INBOARD INTERPLANE STRUTS) WERE SINGLE CABLES. DRAG, CONTROL, STAGGER, AND LANDING GEAR WIRES WERE ALSO SINGLE CABLES. ALL DOUBLE CABLES WITH THE EXCEPTION OF THE CENTER SECTION CABLES WERE SEPARATED AND STREAMLINED WITH A 1" (APPROX.) STRIP OF WOOD AND TAPED AT ABOUT 10" INTERVALS.

THE LETTERS "T.S.F." LOCATED ON THE RT. SIDE OF THE FUSELAGE, LEFT LOWER WING NEAR FUSELAGE, AND UPPER RT. WING NEAR OBSERVER'S VISION CUT OUT ARE ABBREVIATIONS FOR "TELEGRAPHIE SANS FIL" MEANING WIRELESS TELEGRAPHY.

ON SHIP #1060 THE NUMERALS "14" APPEAR TO BE BLACK WITH A WHITE EDGE. THE WING IDENT. STRIPES; BLACK, WHITE, BLACK, (ETC.). THIS PATTERN WAS USUALLY REVERSED ON BOTTOM SURFACE OF THE LOWER WINGS, THAT IS, THE SAME MARKINGS BUT ON OPPOSITE WINGS.

MOST SALMSON PHOTOGRAPHS SHOW A CONSIDERABLE AMOUNT OF "WASHOUT" INCORPORATED IN THE OUTER THREE RIB BAYS OF ALL FOUR AILERONS AS ILLUSTRATED IN THE OTHER VIEWS.

NORMAL CAMOUFLAGE LINE

OVER 700 SALMSON 2A2'S WERE PROCURED FROM FRANCE BY THE A.E.F. MAKING THE TYPE SECOND ONLY TO THE SPAD XIII IN NUMBERS USED BY AMERICANS. THE 2A2 ENJOYED A GOOD REPUTATION. IT HELD TOGETHER WELL AND WAS VERY RUGGED AND DEPENDABLE. AVERAGE IN SPEED, THE 2A2 WAS A WORK HORSE BUT HAS NOT EXPERIENCED THE FICTIONAL GLAMOUR OF SOME OF THE OTHER TYPES SUCH AS THE DH-4. IT HAD A SIMILARLY LONG POSTWAR EXISTANCE.

~ PRINCIPAL DEMENSIONS ~

WINGSPAN	38'-7"	WHEEL TREAD	6'-3"
CHORD	5'-6"	PROPELLER DIA.	9'-1"
GAP	5'-7"	WING AREA	403 SQ.'
LENGTH	27'-8½"	GROSS WEIGHT (APPROX.)	2840 LBS.
HEIGHT	9'-6½"		
ELEVATOR SPAN	14'-4"		
ELEVATOR CHORD	4'-2"		

12-61

1917-1918 Salmson 2A2

PLATE 2 OF 2 DRAWN BY R. Anderson

Siemens-Schuckert

drawings by WILLIAM WYLAM

D.IV

AS A FIGHTING machine, the SS D.IV was as potent as anything developed by the warring nations of WW I. By skillful and sometimes ingenious methods, Siemens engineers produced an airplane weighing no more than its predecessor, the D.III, but with a reduced wing area and a much higher combat performance, mostly due to a new engine, the 200-hp Siemens Halske SH.IIIa. Many experts believe that without this engine the D.IV would have been just another airplane. The engine was unique among rotaries in that the crankshaft revolved in one direction and the cylinders and crankcase revolved in the opposite direction, thus giving an equivalent engine speed of 1,800 rpm with a propeller speed of 900 rpm, a direct 2-1 reduction. This feature allowed the use of a huge four-bladed propeller that was streamlined with a spun aluminum spinner.

From the pilot's standpoint, the Siemens-Schuckert D.IV was an excellent airplane in which to go to war. Its ability to climb rapidly at high altitudes where other aircraft were sluggish was one of its best attributes. It was easily controlled and very responsive, although according to pilot reports it had a nasty stall.

Because it was produced in the last stages of WW I, it was too late arriving to have much influence over the fate of the Germans.

An Albatros-built experimental model with long wings for high-altitude flight is stored in Poland. □

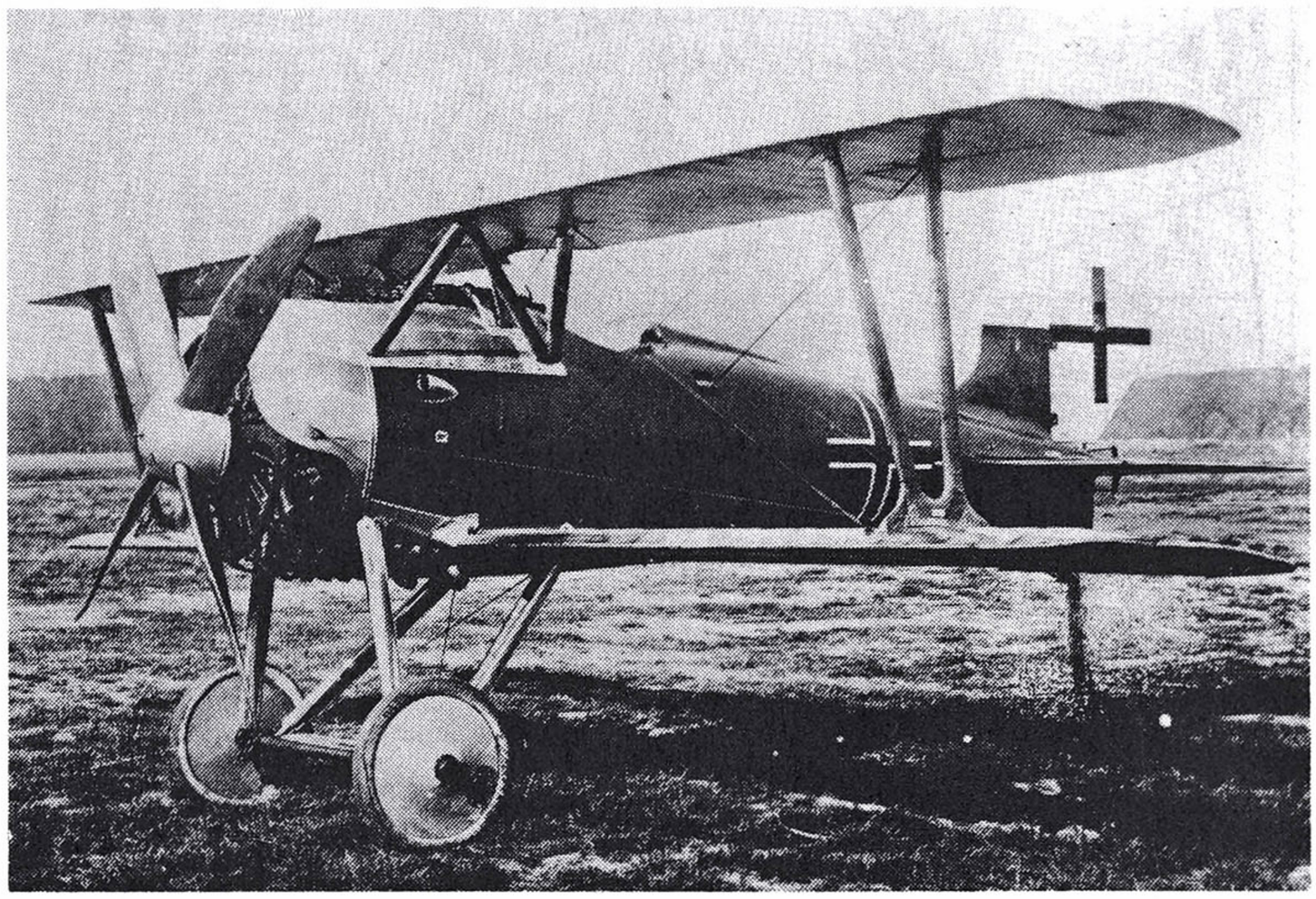

Utilizing a rotary engine and a huge reverse rotating propeller, the D.IV could out-climb its adversaries.

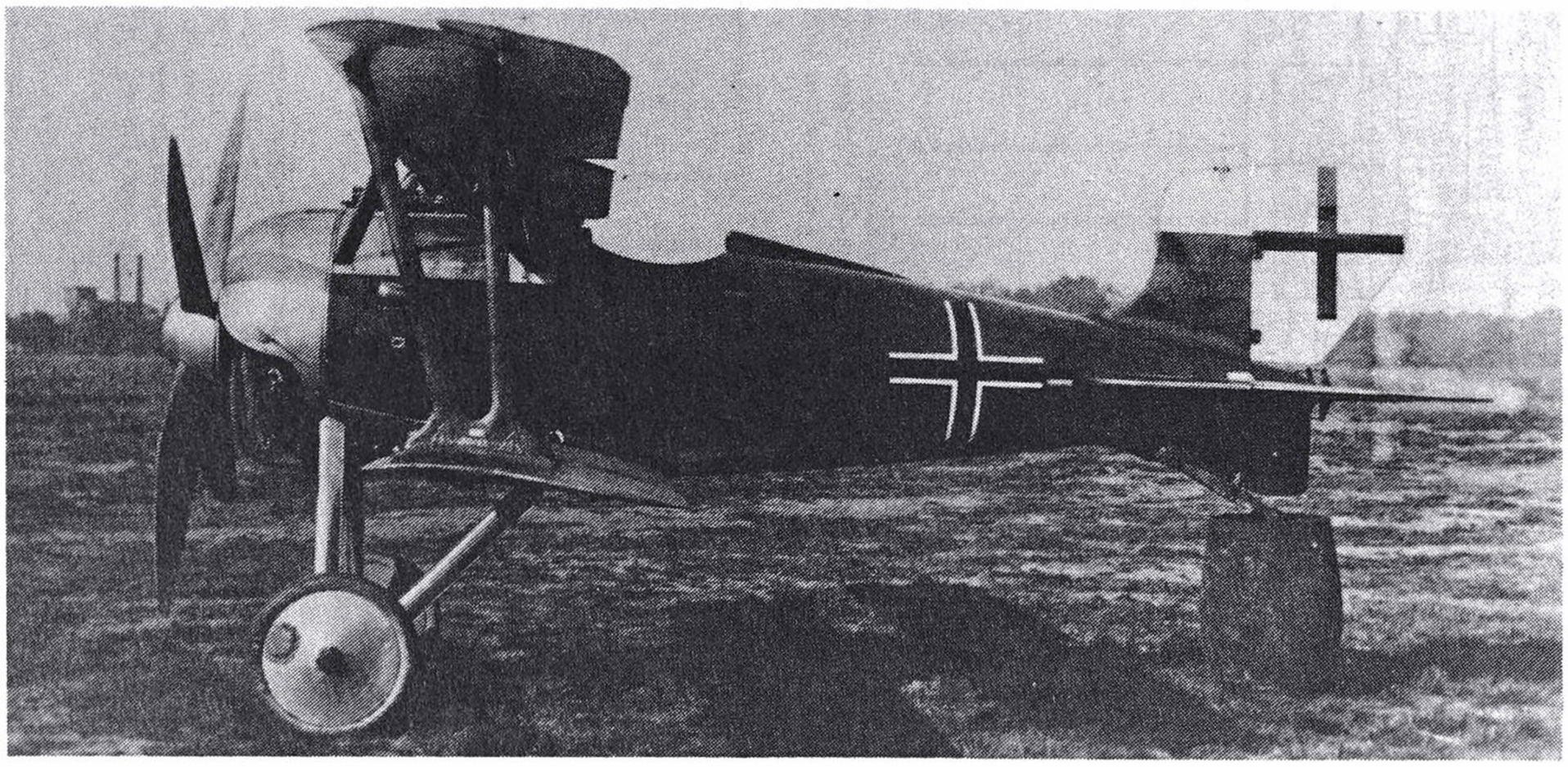

Profile view of the D.IV shows the stubbiness of the design, almost bulldog-like. "Jane's All the World's Aircraft" photos.

AIR AGE INC., 551 FIFTH AVE., NEW YORK 17, N.Y.

SCALE: 1/4"-1'-0"

DATE:

DRAWN BY .... W.A.WYLAM

GENERAL ARRANGEMENTS GERMAN SIEMENS-SCHUKERT D-4

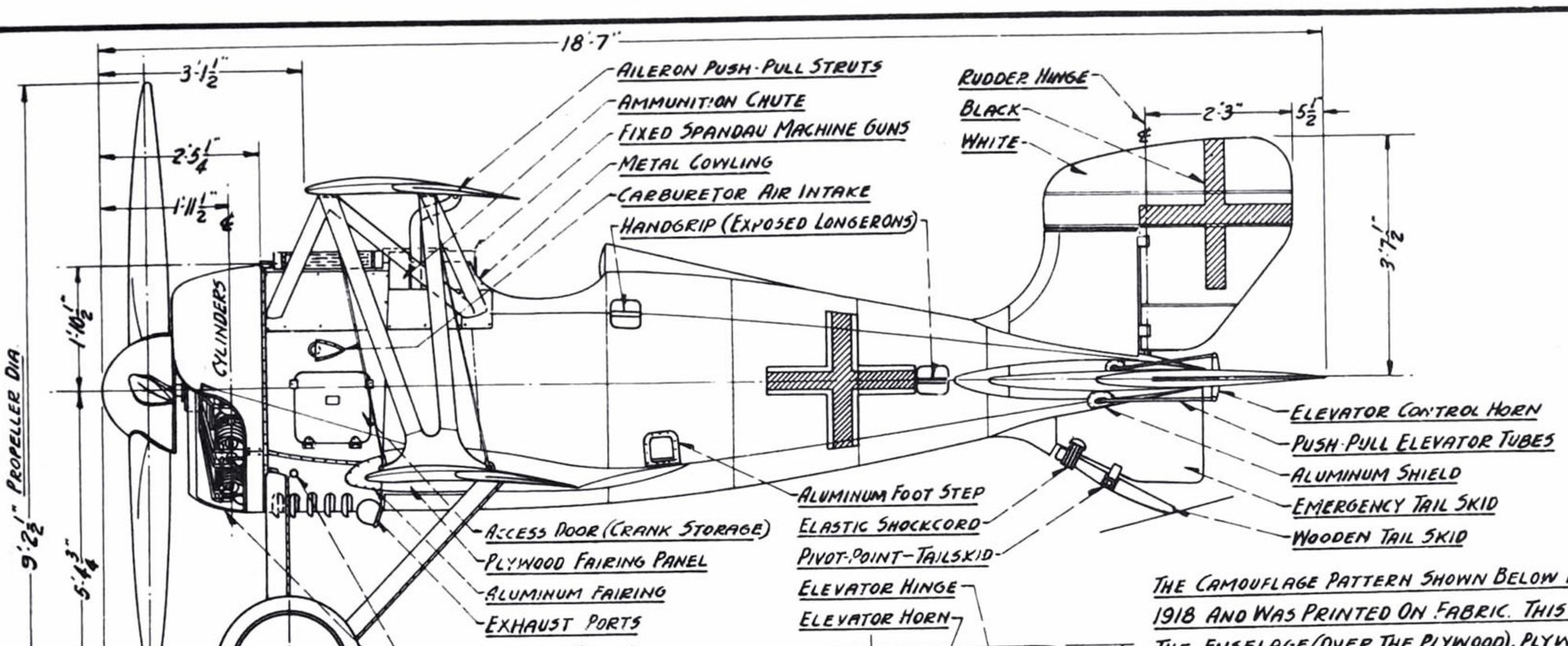

THE CAMOUFLAGE PATTERN SHOWN BELOW WAS ADOPTED IN 1918 AND WAS PRINTED ON FABRIC. THIS WAS DOPED ONTO THE FUSELAGE (OVER THE PLYWOOD), PLYWOOD FAIRINGS, WINGS, & STABILIZERS. THE FINAL FINISH SHOWED NO PLYWOOD BUTT JOINTS AS THE SURFACE WAS SMOOTH. SAME PATTERN WAS PAINTED ON ENGINE COWLS & WHEEL DISCS - SAME ON ALBATROS D.S.

LIGHT GREEN

DARK GREEN

PINK

REDDISH YELLOW

DARK PURPLE

LIGHT BLUE RIB TAPES

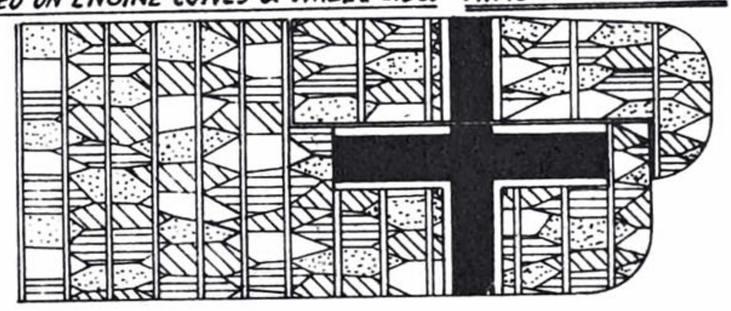

LOWER SURFACES OF WINGS, HORIZONTAL STABILIZER AND FUSELAGE

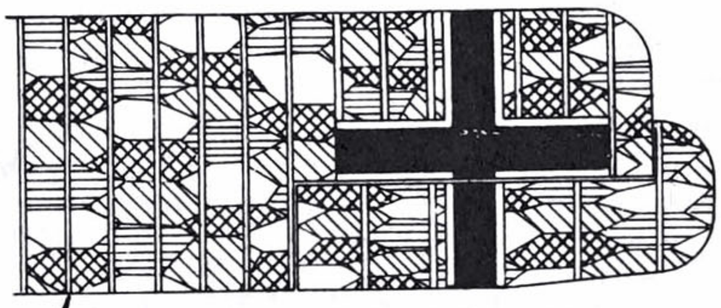

UPPER SURFACES OF WINGS, HORIZONTAL STABILIZER, FUSELAGE, FUSELAGE SIDES, & FIN

ALL WING, CABANE, & LANDING GEAR STRUTS ON LATE D-4's WERE DARK GREEN

NOTES:

1. SIEMENS-HALSKE WAS 11 CYLINDERS; 200 H.P. ROTARY ENGINE USED ON THE SIEMENS-SCHUKERT "D-4." THE ENGINE ROTATES CLOCKWISE; THE PROPELLER ROTATES COUNTER-CLOCKWISE. THIS NEUTRALIZED THE GYROSCOPIC FORCES (ENGINE & PROPELLER SPEED IS 900 R.P.M.).
2. ORIGINAL D-4's HAD VARNISHED DARK WOOD STAINED FUSELAGE, POLISHED ENGINE & FUSELAGE COWLINGS, POLISHED LANDING GEAR STRUTS; NATURAL VARNISHED WING STRUTS & PROPELLER
3. LATE D-4's UPPER WING CHORD WAS ENLARGED.

THANKS TO JOSEPH NIETO, PETER M. BOWERS, CHARLES DONALD AND ROBERT C. HARE FOR HELP ON WORLD WAR ONE AIRPLANES - W.A. WYLAM.

AIR AGE INC., 551 FIFTH AVE., NEW YORK 17, N.Y.

SCALE: 1/4" = 1'-0"

DATE:

DRAWN BY .... W.A. WYLAM

FUSELAGE DETAILS
GERMAN SIEMENS-SCHUCKERT

D-4

FRONT SPAR-UPPER WING
CABANE & BRACE WIRES &
REAR M.G. MOUNT (ADJUST'E)
FRONT M.G. MOUNT (FIXED)
BRACE WIRES AT X & Z ONLY
SEAT SUPPORT TUBING
SHEET ALUMINUM

M.G. BRIDGE SECTION AT &
M.G. BRIDGE TUBING
REAR CABANE LUG
SEAT SUPPORT TUBING

REAR SPAR ATTACH. TUBE
LANDING GEAR SOCKET
STEEL TUBING - STRUTS
FRONT SPAR ATTACH. TUBING
COMPRESSION TUBE
FLARED SECTION
SHEET ALUMINUM
RIVETS

SHOCK STOP LOOP
SHOCKCORD LOOP

4'-3 1/4"
4'-9"
6'-2"
2" DIA.

AXLE PLAN

Y-Y

W-W

PLAN VIEW
UPPER
LOWER

NOTE: ON 4 DIFFERENT RECORDS, SCHUCKERT WAS SPELLED SCHUKERT, SCHUCKERTS AND SCHUCKETT - BOTTOM IS CORRECT

SPAR ATTACHMENT TUBES
LANDING GEAR STRUT &
BRACE WIRES (REAR BAY ONLY)
COMPRESSION TUBE (L.G.)

RIB DETAILS

DRAG WIRE HOLES
AILERON TORQUE TUBE
CABANE LUG
COMPRESSION TUBE
AILERON PUSH-PULL STRUT
EMPTY LINK CHUTES

LATE D-4

FUEL GAGE
COMPASS
RUDDER TUBE
ELEVATOR TUBES

FUEL TANK
EMPTY SHEEL BOX
LINK CHUTE
AMMUN. CHUTE
OIL TANK
LINK CHUTE
RUDDER BAR
MOUNTING FLANGE (BOLTED TO ENGINE MOUNT FRAME)

AIR SPEED
CRASH PAD
SWITCHES
ALTIMETER

HAND HOLD
LONGERON
WEB
FOOT STEP
AILERON HORN
PUSH-PULL STRUT
M.G. TIMER
HAND HOLE

CONTROL TUBES ARE BLACK FOR CLARITY

WELDED ALL STEEL ELEVATOR & RUDDER

LINK CHUTE
EMPTY SHELL BOX
FUEL TANK
OIL TANK
ENGINE FRAME

ENGINE MOUNT FRAME (FRONT VIEW) ON GENERAL ARRANGEMENTS PAGE IS WRONG - SEE ENGINE PLANS.

PLYWOOD COVERING

SEAT ADJUSTMENT & LOCK
COMPASS

TAIL SKID LUG
RUDDER PUSH-PULL TUBE
RUDDER BAR
RUDDER HORN
ELEVATOR HORN
AILERON TORQUE TUBE

A
B
C
D

FUEL TANK
OIL TANK
ENGINE MOUNTING FLANGE

LINKS BOX
AMMUN. CASE
SHOULDER STRAPS
RUDDER BAR
M.G. TIMER

ALTIMETER
AIRSPEED
FUEL GAGE
TACHOM'R

ENGINE START'G. CLUTCH SLIDING COLLAR

SPARK
THROTTLE
COMPASS
AILERON TORQUE TUBE
AILERON PUSH-PULL STRUT
CONTROL COLUMN
SLIDING COLLAR & LOCK
PUSH-PULL RUDDER TUBES
AILERON ACTUATING STRUT
AILERON BELL CRANK

CONTROL DETAILS

"EXHAUST PORTS" WERE NOT CONNECTED WITH THE ENGINE; IT IS BELIEVED THAT IT WAS USED TO EXHAUST THE FUMES FROM THE UPPER AREA OF STATIONS "A" TO "B". THE ENGINE EXHAUST IS EJECTED INTO THE AIR AT THE VALVE PORTS.

UPPER & LOWER WING DETAILS

AILERON TORQUE TUBE

SAME LOWER WING ON LATE D-4s

NOTES:
ONLY A FEW EARLY D-4s WERE BUILT AND THE BULK OF THE PRODUCTION WERE ON THIS IMPROVED VERSION OF THE D-4. NO OFFICIAL RECORD COULD BE FOUND TO CALL THIS MODEL THE D-4A. MAJOR CHANGES WERE: UPPER WING, ENGINE, TAIL & LOWER AILERONS.

18'-6" OVERALL

2'-4"
4'-6 3/4" CHORD
1'-7 1/4" STAGGER
+2°
1'-10 1/2"
9'-2 1/2" DIA.
2'-9 1/2"
2'-1" DIA.
5'-4 3/4"
1'-0 1/2" R.
AIR SCOOPS
2'-10"
13 1/2°

PILOT'S INITIAL OR IDENTIFICATION LETTER, "U" FOR UDET (WHITE)
JAGDSTAFFEL 14 (LEADER)
WHITE OUTER BANDS - BRIGHT BLUE INNER BAND.
WHITE
BLACK
COLOR LINE
JAGDSTAFFEL 14 BRIGHT BLUE BAND

THREE ROWS OF LOUVERS (INSTEAD OF TWO ROWS)
160 H.P. SIEMENS-HALSKE DIRECT ROTARY - 11 CYLINDERS - COUNTER-CLOCKWISE

ENGINE COWLINGS, FUSELAGE COWLS & WHEEL DISC WERE PAINTED IRREG. HEXS.

1'-5"
3'-9"
5"
1'-5 1/2"
WHITE
7" R.
1'-4"
S.S.W. D3789/18
1'-10 1/2"
3'-7 1/2"
11 1/2"
1'-10"
11 1/2 R.
8"

JAGDSTAFFEL 14 ONLY BRIGHT BLUE HORIZONTAL STABILIZER & ELEVATOR

ALL UPPER SURFACES OF WINGS, FUSELAGE, HORIZ. STABILIZER; FUSELAGE SIDES & FIN WERE OF IRREGULAR HEXAGONS AS DESCRIBED ON GENERAL ARRANGEM'T PAGE. ALL LOWER SURFACES OF WINGS, FUSELAGE (BELOW COLOR LINE), HORIZ. STABILIZER, AND TAILSKID WERE OF LOWER SURFACES IRREGULAR HEXAGON PATTERNS.

4'-6 3/4"
2'-3 1/2"
1'-7 1/4"
1/8" = 1'-0"
4'-9"
5'-3"
9 1/2"
1'-7 1/4"
7'-6 1/2"
27'-7"
1'-0"
2 1/2"
4" R.
1'-8" R.
2'-3"
6"
3'-0"

5 EQUAL RIB SPACINGS-CENTER SECTION
5 EQUAL SPACES AILERONS ONLY
14 EQUAL SPACES-UPPER & LOWER
7 EQUAL SPACES UPPER & LOWER
REAR SPAR-LOWER WING
REAR CABANE WIRE
REAR SPAR-UPPER WING
FRONT SPAR-LOWER WING
FRONT CABANE WIRE
FRONT SPAR-UPPER WING
INNERPLANES STRUT
HORIZONTAL THRUST
REF. ONLY
REAR STRUT
FRONT STRUT
WHEEL & AXLE
FUEL TANK DOOR
TRUE FUSELAGE LINE
FAIRING PANEL
FRONT SPAR-LOWER
CHANGE OF CONTOUR LINE
HINGE

NO DIHEDRAL IN EITHER WING. BOTH WINGS WERE OF SAME DESIGN AND CONSTRUCTION.

CHANGE OF CONTOUR LINE
PLYWOOD FAIRING PANELS WERE BUTTED AGAINST MATING FUSELAGE PANELS

UPPER & LOWER WINGS' AIRFOIL

STAGGER
REAR STRUT ℄
FRONT STRUT ℄
INCIDENCE
2° INCIDENCE
CABANE REF. ONLY
FLYING & LIFT WIRES
DRIFT WIRE
REAR SPAR-LOWER WING
REAR SPAR-UPPER WING
FRONT SPAR-UPPER WING
4'-2" APPROX.

AIR AGE INC., 551 FIFTH AVE., NEW YORK 17, N.Y.	
SCALE: 1/4" = 1'-0"	LAYOUT PLANS & DATA GERMAN'S SIEMENS-SCHUKERT
DATE:	
DRAWN BY ... W. A. WYLAM	D-4

Sopwith Camel

drawings by WILLIAM WYLAM

THE SOPWITH Camel was the most widely and most numerously produced aircraft of WW I. A total of 5,490 Camels were constructed by at least nine manufacturers and the design was considered to be one of the best dog fighters of the 1914-1918 conflict. The Camel was responsible for the destruction of more German aircraft than any other design and was the first British aircraft designed for two forward-firing machine guns. Two versions, the F.1 and the 2F.1, were produced, the latter for the Royal Navy with shorter wings, smaller tail surfaces, and a larger engine. It changed the course of Naval aviation. Needing a weapon to counter the activities of German dirigibles that had previously exercised surveillance of British Naval activities without jeopardy, the Camel was to become the first successful attempt to counter the high-flying Germans. On August 11, 1918, Sub-Lieutenant Stuart D. Culley, an American-born member of the British Royal Air Force, took off from a platform in tow by a British destroyer and climbed to 18,000 feet in pursuit of the German dirigible L.53. Finding the dirigible in his sights at 19,000 feet, Culley's Camel staggered and strained to maintain flight as he emptied his guns upward and directly at the dirigible. The L.53 seemed unaffected until suddenly it burst into flames and dropped into the sea. This was the first aerial victory by a shipboard aircraft.

Culley's Camel is now exhibited at London's Imperial War Museum: there are five other Camels in other museums. □

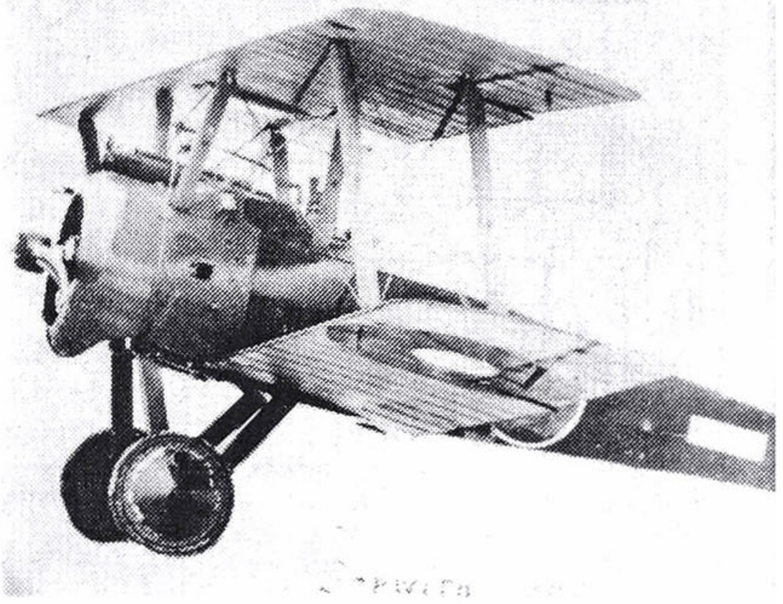

The Sopwith Camel was produced in large quantities during WW I. Air Age file photo.

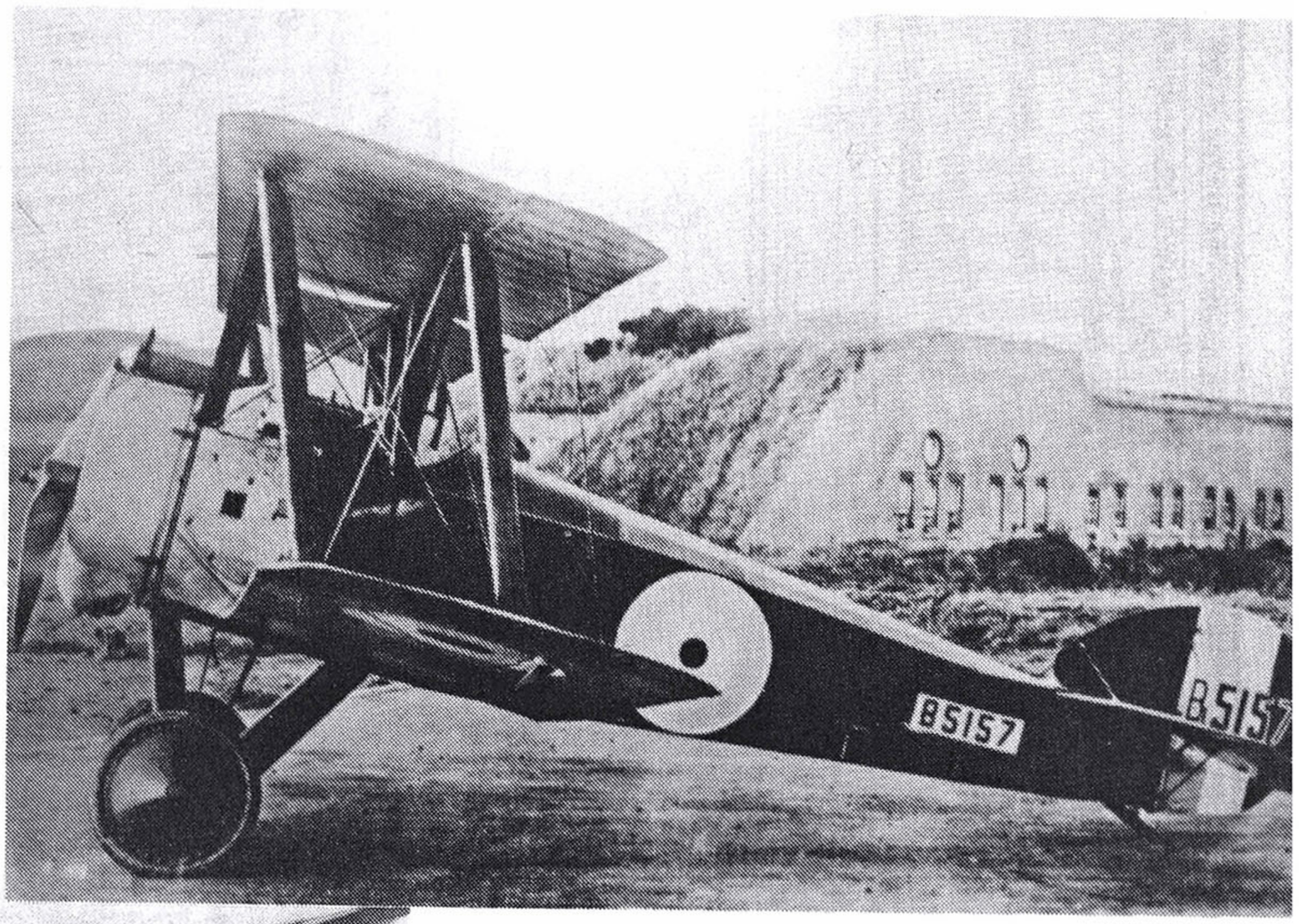



Responsible for the destruction of more German aircraft than any other Allied design, the Sopwith Camel was also adapted for use by the Royal Navy. Photo courtesy of Leonard Opdycke, WW I Aeroplanes.

2F.1

R.A.F. AND R.N.A.S. MODEL "2F.1" WITH CHANGED WINGS & STABILIZER; FUSELAGE SAME AS 1F.1's. SHIPBOARD 2F.1 FUSELAGE BUILT IN TWO SECTIONS; FRONT & REAR PORTIONS FOR STORAGE ON SHIPS. SEA CAMELS HAD ONLY ONE VICKERS M.G.; OTHERS HAD ONE VICKERS & ONE LEWIS; OR TWO VICKERS. SEA CAMELS HAD 130 H.P. CLERGET; OTHER MODELS HAD SAME ENGINES ALONG WITH 150 H.P. BENTLEY "B.R.1" & 230 H.P. BENTLEY "B.R.2"

18'6"

1'10½"

OPTIONAL LEWIS

OPTIONAL PROPELLER

SEA CAMEL'S PART-ING LINE-TAIL UNIT WAS DETACHABLE. SEA CAMEL ONLY

CARBURETOR AIR INTAKE

NO. 43 SQUADRON-R.A.F.

SPECIAL SERVICE BANDS

ONE SOLID BAND-BOMBER

TWO THIN BANDS-BALLON BUSTR

1F.1 & 2F.1 LACING

ELEVATOR HINGE

BRACE WIRES

INSTRUCTOR

STUDENT

TRAINING VERSION OF 1F.1 CAMEL WITH NO ARMAMENTS

WING-WALK

MAIN FUEL TANK ACCESS

SEA CAMEL ONLY

PLYWOOD

AUX. FUEL TANK ACCESS

SUTTON HARNESS

HORNS

TAIL-SKID CONTROL CABLE

SPECIAL HEADREST

FLEXIBLE WINDSHIELD

WHITE

WITH OR WITHOUT EDGE TRIM

BLACK-LOWER SURFACE

BLUE

WHITE

RED

TRANSPARENT INSPECTION PANELS (LOWER SURFACE ONLY)

PLAN & FRONT VIEWS SHOW STANDARD 1F.1's FUSELAGE; LEFT SIDE ENGINE COWL IS 1F.1's; RIGHT SIDE IS 2F.1's. SAME LANDING GEAR ON BOTH MODELS.

M.G. CHARGING HANDLE

1F.1's STANDARD COWL

TWIN FIXED VICKERS

PROPELLER SPINNER (OPTIONAL)

ALDIS GUN SIGHT TUBE

FIXED WINDSHIELD

GUN SIGHT RING

FUEL PRESS. PUMP

VENT

SINGLE VICKERS

EMPTY LINK EXIT

AMMUNITION CHUTE

ALDIS GUN SIGHT TUBE

TRANSPARENT PANEL (UPPER SURFACE)

CROSS-WIRES FAIRING

FAIRING PANELS

OPTIONAL SIDE WINDSHIELD

STREAMLINED WIRES

AILERON CONTROL CABLE

NOSE-RIBS-UPPER SURFACE ONLY

DOUBLE FLYING WIRES

SINGLE LANDING WIRES

AILERON GAP WIRE

AILERON HORN

1F.1 & 2F.1 SWEEPBACK

1F.1

2F.1

M.G's

1'10"

8'9" DIA.

2'4" DIA.

4"

GROUND POSITION

FLYING POSITION

4'5" TREAD

CARBURETOR AIR INTAKE

2F.1's COWL (ON LATE 1F.1 ALSO)

230 H.P. BENTLEY COOLING SLOTS

130 H.P. CLERGET ROTARY SHOWN

REAR CROSS WIRES

FRONT CENTER WIRE

RUBBER SHOCKCORDS

FIXED SUB-WING

STANDARD CAMEL PROPELLER

COLOR SCHEME:

1. FUSELAGE, FIN, STRUTS, UPPER SURFACES OF WINGS & HORIZONTAL STABILIZER, WHEEL DISCS & ENGINE COWLINGS - SOLID KHAKI. (SOME CAMELS HAD POLISHED OR BURNISHED ENGINE COWLS).
2. ALL LOWER SURFACES OF WINGS & HORIZON. STABILIZER WERE BUFF.
3. ALL SQUADRON & SPECIAL SERVICE MARKINGS, LETTERINGS - WHITE.
4. SERIAL NUMBERS ON RUDDER - BLACK WITH WHITE TRIM.
5. TRAINING & HOME DEFENSE VERSIONS - ALL SILVER.

BOTTOM VIEW

METAL

PLYWOOD

FABRIC

SPAR ACCESS DOORS

18'9"

5½'

8'

1F.1

R.A.F. MODEL "1F.1" CAMEL WITH FIXED VICKERS; OR ONE VICKERS & ONE LEWIS MAC. GUNS

ORIGINAL VERSION HAD 110 H.P. LE RHONE; BULK OF PRODUCTION WERE ON 130 H.P. CLERGET AND 150 H.P. "A.R.1" ROTARY ENGINES. VARIOUS PRODUCTIONS HAD CHANGES ON WINDSHIELDS, GUN ACCESS PANELS & WING CUT-OUTS.

ELEVATOR CONTROL CABLES

RUDDER CONTROL CABLE

FOOT STIRRUP

TAILSKID HORN

NO. 210 SQUADRON-R.A.F.

B

A

AILERON CONTROL CABLE

EMPTY SHELL CHUTE

REMOVABLE METAL PANEL

REAR CROSS-WIRES

FRONT CENTER-WIRE

CYLINDERS

1'9"

15"

3'6"

FLYING POSITION

4'11½"

STREAMLINE WIRE FAIRING

FAIRING PANELS

ALDIS GUN SIGHT

2'1½"

1'2¼"

M.G. CHARGING HANDLE

EMPTY LINK EXIT

FUEL PRESS. PUMP

METAL PANELS

THANKS TO ERNEST W. ATKINS, PETER M. BOWERS, CHARLES DONALD, ROBERT LINN AND HELMUTH ZIEBE FOR PHOTOS.

AIR AGE INC., 551 FIFTH AVE., NEW YORK 17, N.Y.

SCALE: ¼" = 1'0"

TYPE: FIGHTER

COPYRIGHT 1947 WILLIAM A. WYLAM

GENERAL ARRANGEMENTS ENGLAND'S SOPWITH 1F.1 & 2F.1

CAMEL

BUILT 1917-18 BY SOPWITH AVIATION COMPANY

AIR AGE INC., 551 FIFTH AVE., NEW YORK 17, N.Y.

SCALE: 1/4" = 1'-0"

TYPE: FIGHTER

COPYRIGHT 1947
WILLIAM A. WYLAM

INTERIOR DETAILS
ENGLAND'S SOPWITH 1F1 & 2F1

CAMEL

BUILT 9/17/18 BY SOPWITH AVIATION COMPANY, INC.

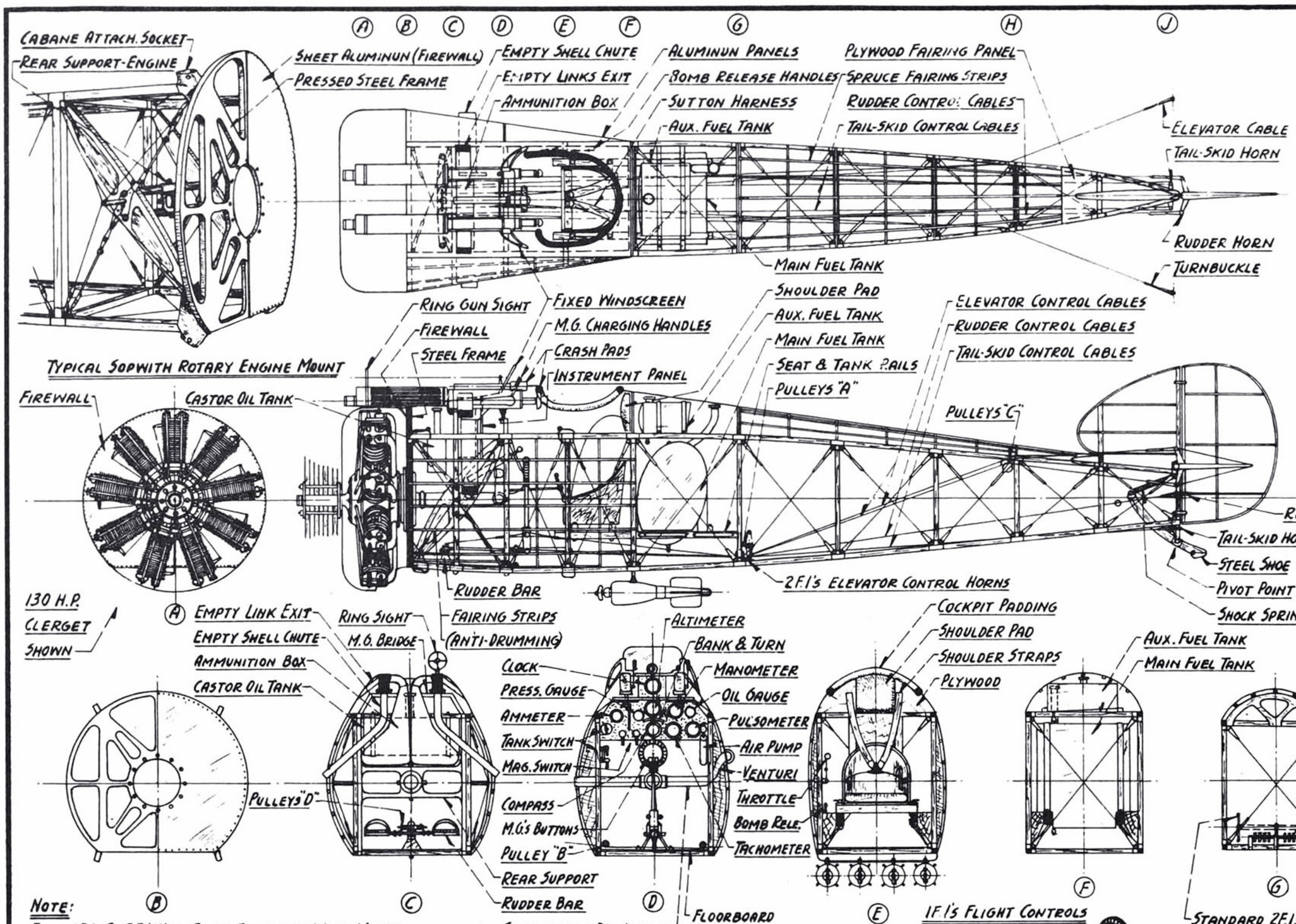

NOTE:
BOTH 1F.1 & 2F.1 HAD SAME FUSELAGE WITH MINOR CHANGES ON FUSELAGE & COCKPIT COWLINGS. SEA CAMEL HAD EXTRA UPRIGHTS & CROSS-PIECE MEMBERS AT PARTING LINE - REAR & FRONT PORTIONS WERE BOLTED TOGETHER.



STANDARD CAMEL FUSELAGE

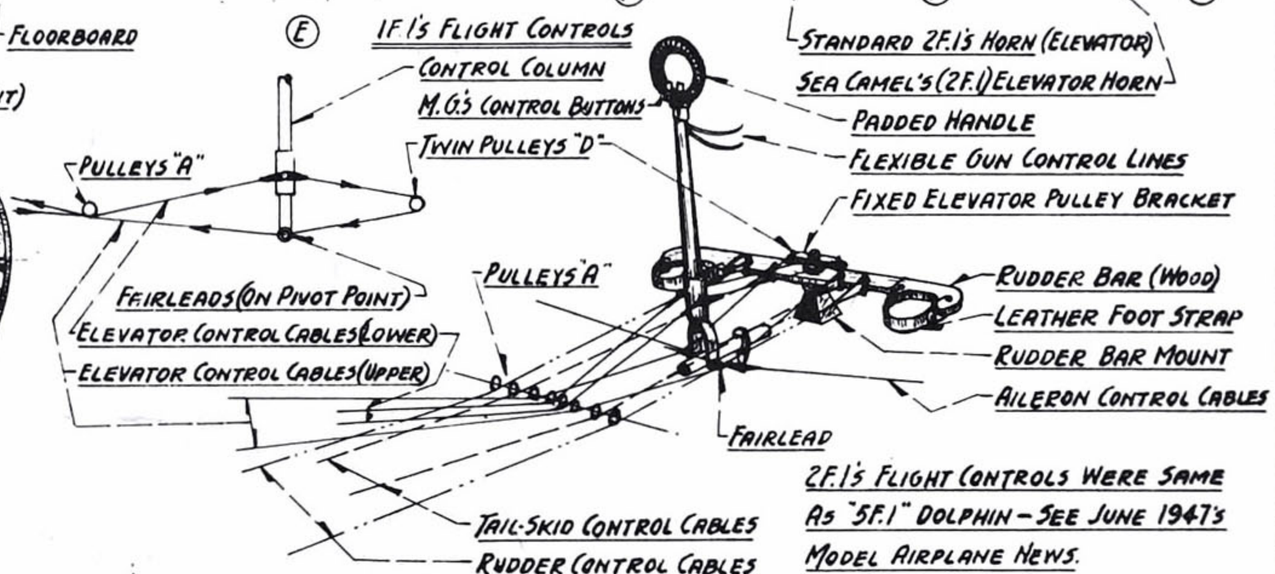

2F.1's FLIGHT CONTROLS WERE SAME AS "5F.1" DOLPHIN - SEE JUNE 1947's MODEL AIRPLANE NEWS.

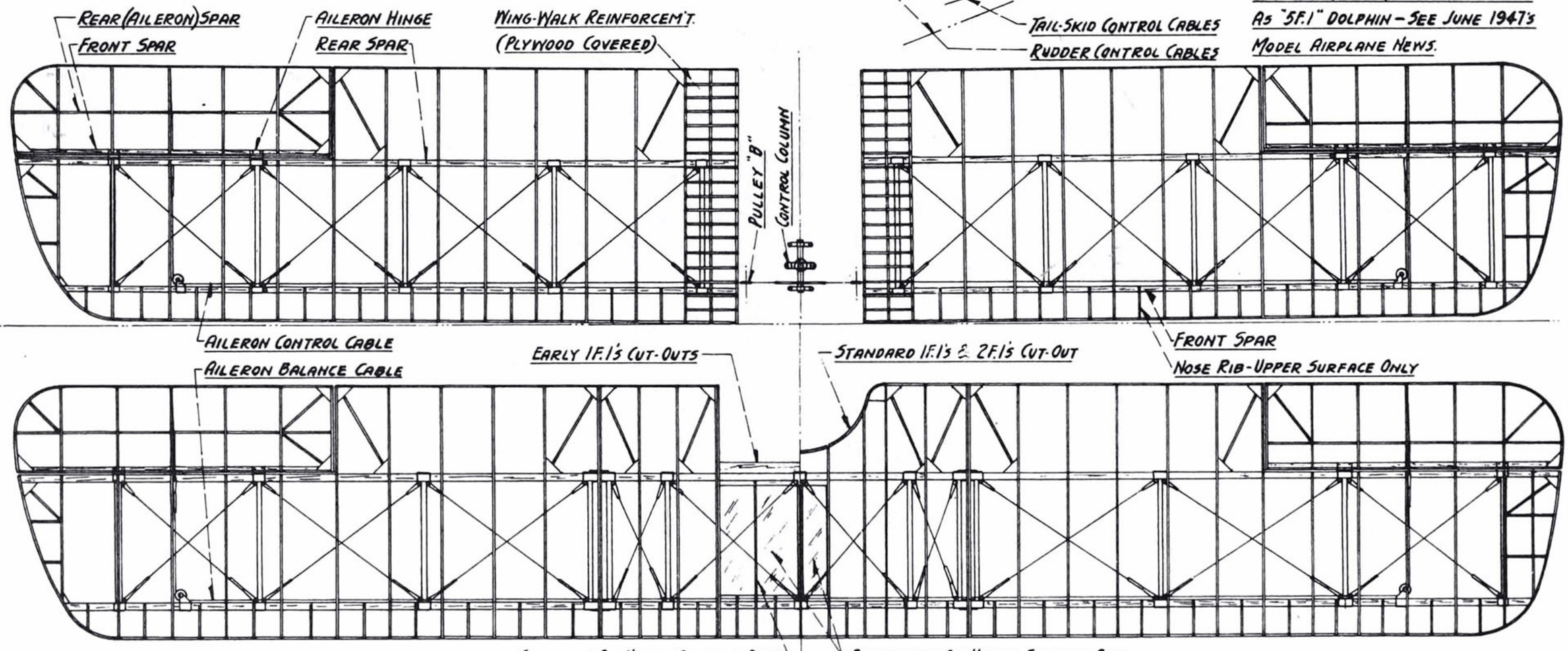

1F.1's UPPER & LOWER WINGS

2F.1's UPPER & LOWER WINGS

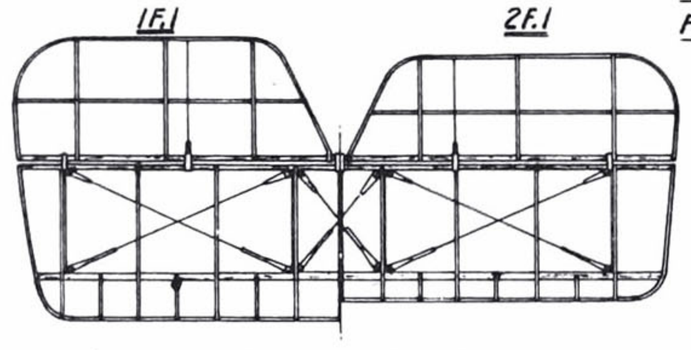

HORIZONTAL STABILIZER WAS THICKLY CAMBERED FOR INSTALLATION OF DRAG WIRES

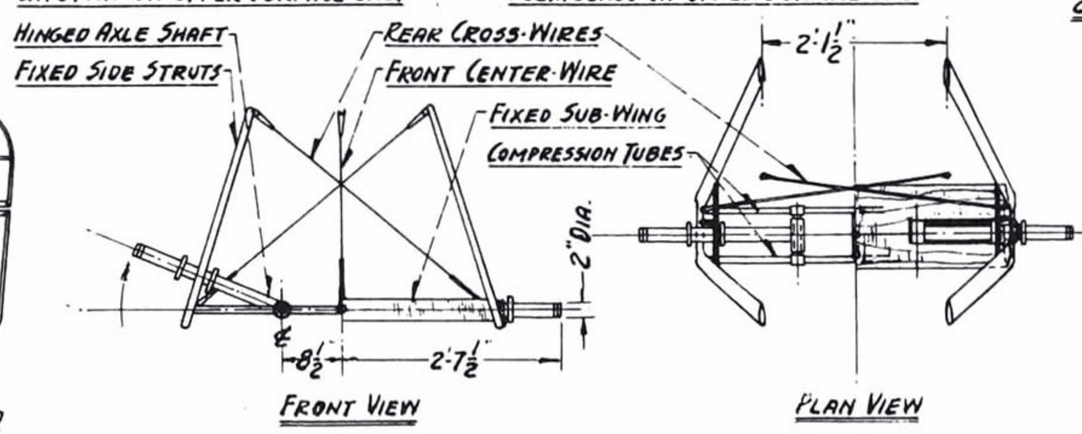

FRONT VIEW

PLAN VIEW

NOTE:
BOTH 1F.1 & 2F.1 VERSIONS HAD THE SAME LANDING GEAR DESIGN.

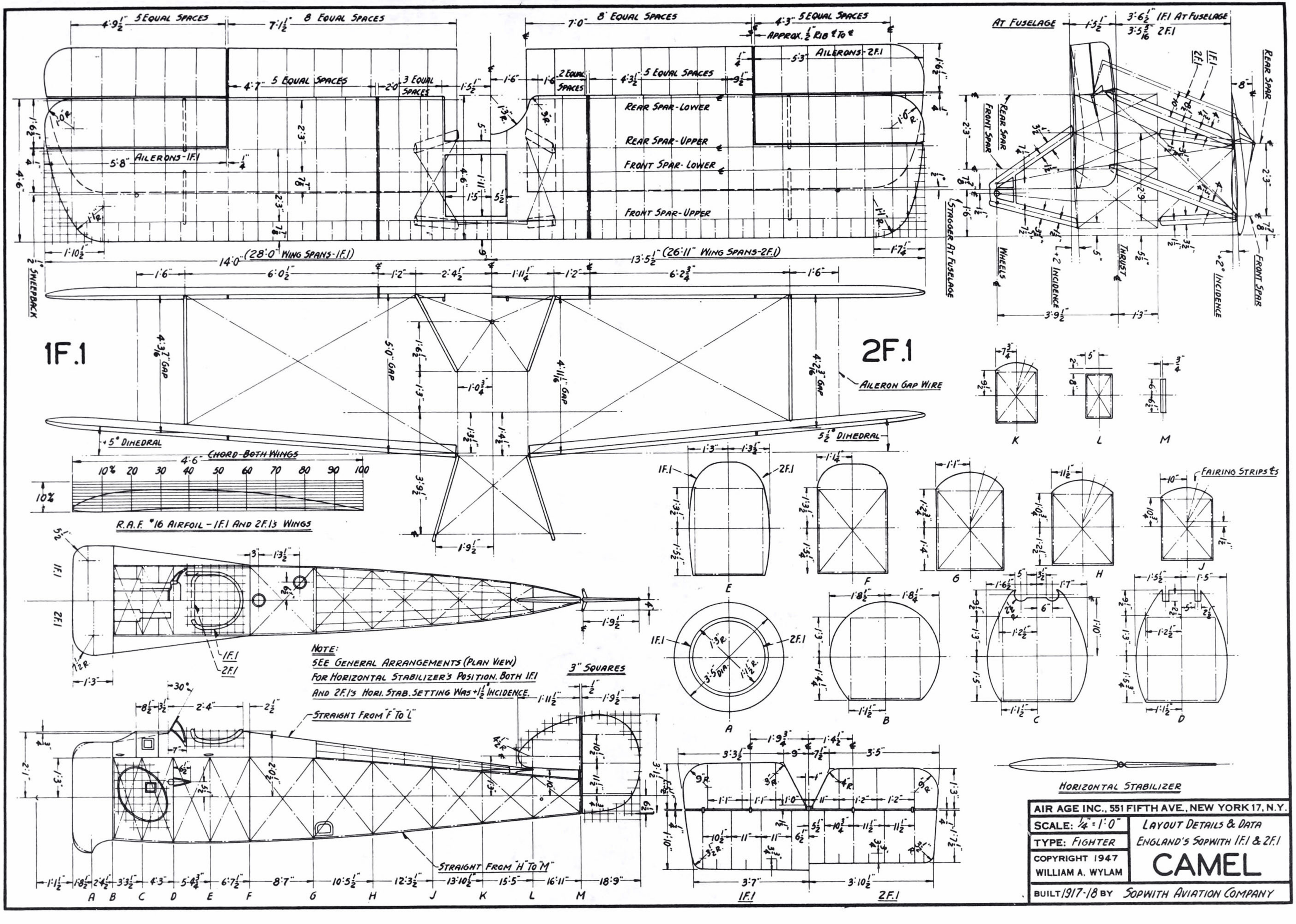
1F.1
2F.1
4:9½" 5 EQUAL SPACES
7:1½" 8 EQUAL SPACES
7:0" 8 EQUAL SPACES
4:3" 5 EQUAL SPACES
APPROX. ½" RIB ℄ TO ℄
AILERONS-2F.1
5:3"
4:7" 5 EQUAL SPACES
2:0" 3 EQUAL SPACES
1:6" 2 EQUAL SPACES
4:3½" 5 EQUAL SPACES
REAR SPAR-LOWER
REAR SPAR-UPPER
FRONT SPAR-LOWER
FRONT SPAR-UPPER
AILERONS-1F.1
5:8"
14:0" (28:0" WING SPANS-1F.1)
13:5½" (26:11" WING SPANS-2F.1)
SWEEPBACK
4:3⅞" GAP
5:0" GAP
4:11⅛" GAP
4:2⅜" GAP
AILERON GAP WIRE
5° DIHEDRAL
5½° DIHEDRAL
4:6" CHORD-BOTH WINGS
10% 20 30 40 50 60 70 80 90 100
10%
R.A.F. "16 AIRFOIL - 1F.1 AND 2F.13 WINGS
NOTE:
SEE GENERAL ARRANGEMENTS (PLAN VIEW)
FOR HORIZONTAL STABILIZER'S POSITION. BOTH 1F.1
AND 2F.1's HORI. STAB. SETTING WAS +1½° INCIDENCE.
3" SQUARES
STRAIGHT FROM "F" TO "L"
STRAIGHT FROM "H" TO "M"
1:1½" 1:8½" 2:4" 3:3½" 4:3" 5:4¾" 6:7½" 8:7" 10:5½" 12:3½" 13:10½" 15:5" 16:11" 18:9"
A B C D E F G H J K L M
AT FUSELAGE
1:5½"
3:6½" 1F.1 AT FUSELAGE
3:5 5/16" 2F.1
REAR SPAR
FRONT SPAR
1F.1
2F.1
STAGGER AT FUSELAGE
WHEELS
THRUST ℄
2° INCIDENCE
+2° INCIDENCE
3:9½"
1:3"
K
L
M
FAIRING STRIPS ℄s
1F.1
2F.1
E
F
G
H
J
A
B
C
D
HORIZONTAL STABILIZER
3:3½"
9"
7½"
3:5"
3:7"
3:10½"
AIR AGE INC., 551 FIFTH AVE., NEW YORK 17, N.Y.
SCALE: ¼" = 1'0"
TYPE: FIGHTER
COPYRIGHT 1947
WILLIAM A. WYLAM
LAYOUT DETAILS & DATA
ENGLAND'S SOPWITH 1F.1 & 2F.1
CAMEL
BUILT 1917-18 BY SOPWITH AVIATION COMPANY

Sopwith Dolphin 5F.1

drawings by WILLIAM WYLAM

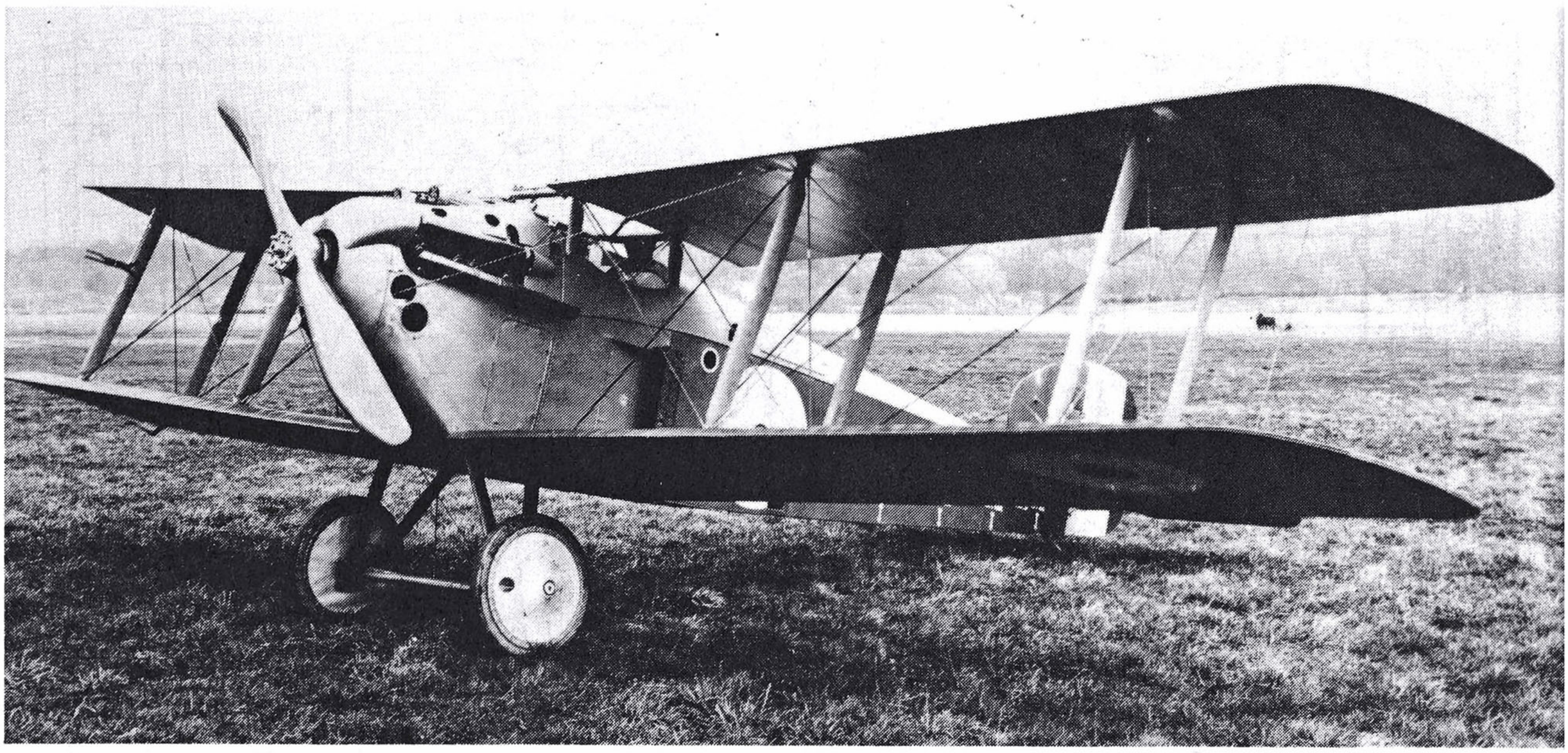

Conceived in 1916 as an answer to Allied air squadrons' requirements for air superiority, the Sopwith Dolphin 5F.1 was slow in coming and hardly fulfilled its combat credentials. Air Age file photo.

THE DESIGN of the Dolphin began as a scratch-pad doodle in the engineering rooms of Sopwith Aviation during the summer of 1916. The doodling engineers pointed with pride at their thumbnail sketches of what might be, if only a 190-hp water-cooled engine were available.

Then, like a bolt from the blue, word came that Wolseley Motors had obtained a license from Hispano-Suiza to manufacture their new 200-hp geared engine. With the promise of an appropriate powerplant, the doodle soon became an engineering project and the forces of Sopwith immediately went to work on Model 5F.1. It was nicknamed "Dolphin" in accordance with Sopwith's custom of naming their products after animals, fish, or fowl.

In performance, the production Dolphins left little to be desired for a 1918 service type. The first operational models officially weighed in at 1,406 pounds empty and grossed 1,881 pounds. Fuel, weighing 194 pounds and sufficient for a 230-mile range, was included in this gross figure. The top speed was 136 mph at sea level and it had a landing speed of 40 mph.

As an all-around single-seater, the Dolphin exceeded anything the British manufacturers were able to put out in squadron quantities before WW I ended. Other types perhaps bettered it in specific items of performance, but as a package the 5F.1 was hard to beat. It possessed enough good characteristics that a 300-hp version was built and tested for production in 1919 and which the U.S. and French air services were contracting at the time of the Armistice.

One Dolphin lives in the RAF Museum in London. □

NOTES:

1. FOR DETAILS ON NISPANO-SUIZA ENGINES, SEE SEPTEMBER 1945'S; FOR DETAILS ON VICKERS MACHINE GUNS, SEE APRIL 1946'S; AND FOR DETAILS ON LEWIS MACHINE GUNS, SEE AUGUST 1946'S ISSUE OF MODEL AIRPLANE NEWS.
2. THANKS TO EVAN P. JAMES, GEORGE MCLAUGLIN, CHARLES DONALD AND ROBERT C. HARE FOR HELP ON DOLPHIN MATERIALS.
3. THANKS TO OWEN G. THETFORD & LEONARD BRIDGMAN OF PROSATE, AND LONDON, ENGLAND, FOR DOLPHIN SQUADRON MARKINGS.

AILERON GAP WIRES

ATOT HEAD DETAILS

FORWARD

16'-3"

32'-6" SPAN-ALL MODELS

200 & 220 H.P. COMBAT MODEL NOSE-VIEW SHOWN

.30 CAL. SEMI-FIXED LEWIS M.G.S
.30 CAL. FIXED VICKERS M.G.S
RADIATOR SHUTTER OPENED

2'-3" DIA.

½"

4"

GROUND LINE AT REST

5'-0" TREAD

2" SHOCKCORD EXPANSION

FLYING POSITION OF WHEELS

NORMAL GROUND POSITION OF WHEELS

BRACE WIRES ON FRONT BAY ONLY

CENTER BRACE WIRE

SINGLE STREAMLINED BRACE WIRES

RADIATOR SHUTTER CLOSED

ALDIS GUN SIGHT TUBE

FLEXIBLE WINDSHIELD

AIR PUMP-FUEL PRESSURE

FRONT SPAR (CENTER TUBING)

FLEXIBLE WINDSHIELD

MODEL "A" HISPANO-SUIZA
150 H.P. DIRECT DRIVE
8'-5" DIA. COUNTER-CLOCKWISE
DULL-BLACK PROPELLER

ORIGINAL DOLPHIN
ARMAMENTS UNKNOWN

22'-3"

2'-10½"

1'-1" STAGGER

1'-8¾"

PLYWOOD DECK
FOOT STEP
FUEL TANK ACCESS HOLE
STORAGE DOOR

2'-5"

1'-2½"

1'-0"

2'-2½" 12R

2'-10½"

1'-7"

6" R.

3'-0"

1'-6"

1'-0"

1'-4"

1'-2" R.

LIFT HERE

LEWIS GUNS IN LOCKED POSITION - CAN BE SWUNG BACKWARD TO ANY ANGLE UP TO 45° - LOCKED POSITION IS ABOVE PROPELLER DISC.

BOTH 200 & 300 H.P. COMBAT MODELS

STEERABLE TAILSKID (ON ALL DOLPHINS)

22'-3"

2'-10"

2'-9"

1'-10½"

1'-8¾"

1'-0"

LEWIS RELOADING POSITION
30 CAL. LEWIS M.G.
VICKERS' CHARG'G. HANDLE
SHUTTER PANEL
SIDE RADIATOR

NO. 19 SQUADRON - R.A.F.
WHITE MARKINGS ON ALL 4 SIDES
WHITE SERIAL NUMBERS ON FIN
WHITE PANEL WITH BLACK SERIAL
FOOT STEP
FABRIC COVERED DECK

C 3824

C 3824

LIFT HERE

TWIN FIXED VICKERS .30 CAL. AIR PETCOCK ACCESS HOLES (CYLINDER BANKS DRAIN)

MODEL "D" SERIES HISPANO-SUIZA
200 & 220 H.P. GEARED DRIVE
8'-5" DIA. CLOCKWISE PROPELLER

200 & 220 H.P. COMBAT DOLPHIN

WHITE OR YELLOW TRIM
BLUE
RED

SHUTTER HINGE
EMPTY LINK CHUTE
EMPTY SHELL CHUTE
ACCESS PANEL
CENTER BRACE WIRE
RADIATOR
CARBURETOR INTAKE
AILERON HORN

NOTES:
REFER TO S.E.-5'S SQUADRON PAGES FOR STANDARD COLOR SCHEMES OF R.A.F.'S AIRPLANES. PILOT'S IDENTIFICATION LETTER & NUMBERS WERE ON THE WINGS IN SAME POSITIONS AS THE S.E.-5'S "Z".

180 H.P. TRAINING DOLPHIN (NO ARMAMENTS)

MODEL "A" SERIES HISPANO-SUIZA
180 H.P. DIRECT-DRIVE
8'-5" DIA. COUNTER-CLOCK PROP.

TWIN FIXED VICKERS .30 CAL. (CONCEALED UNDER COWLING)

1'-7"

6"-6"

6"

1'-6"

7½"

3'-10"

ALDIS GUN SIGHT

1'-10½"

1'-8¾"

1½"

NO. 87 SQUADRON - R.A.F. (BOTH BARS)
NO. 90 SQUADRON - R.A.F. (SINGLE WHITE RING)

D 7092

D 7092

LIFT HERE

PILOT'S IDENTIFICATION LETTER

MODEL "H" HISPANO-SUIZA
300 H.P. DIRECT DRIVE
8'-5" DIA. COUNTER-CLOCKWISE
- THIS AIRPLANE WAS ALSO USED BY FRANCE AND WAS KNOWN AS THE "FRENCH DOLPHIN."

300 H.P. COMBAT DOLPHIN

4'-0¾"

THE ENTIRE WATER LINES, FROM ENGINE TO RADIATORS, WERE OPEN AT ALL TIMES. WHEN THE WATER TEMPERATURE WAS LOW; THE SHUTTER PANELS WERE OPENED (BY HAND RATCHET CONTROLS ON INTERIOR SIDES OF FUSELAGE) TO SHUT OFF THE COOLING AIRSTREAM. THE PANELS WERE ADJUSTED TO KEEP THE TEMPERATURE AT A SAFE LEVEL.

AIR AGE INC., 551 FIFTH AVE., NEW YORK 17, N.Y.	
SCALE: ¼" = 1'-0"	GENERAL ARRANGEMENTS ENGLISH SOPWITH "DOLPHIN"
DATE:	5F1
DRAWN BY ... W. A. WYLAM	

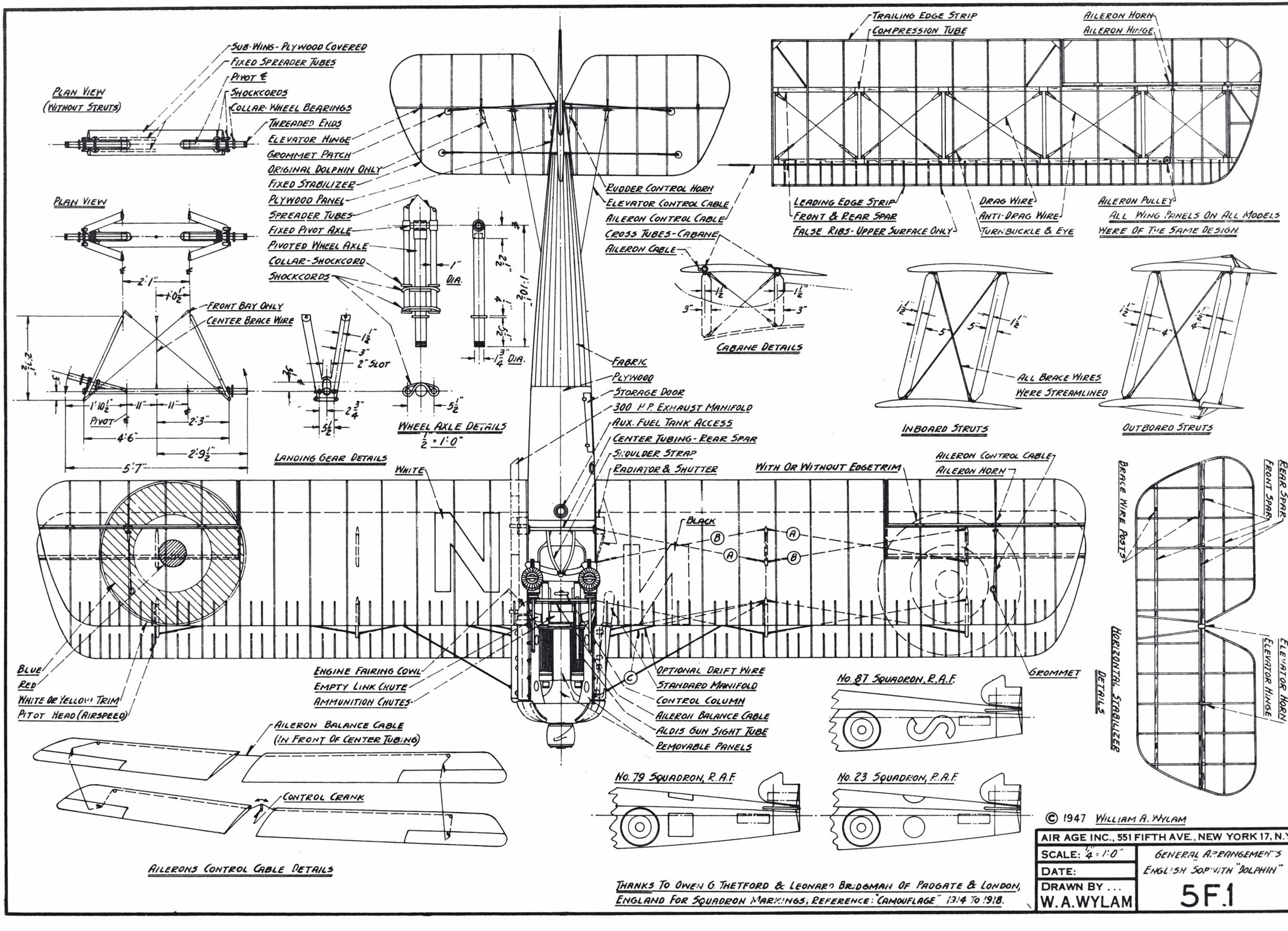

© 1947 WILLIAM A. WYLAM

THANKS TO OWEN G. THETFORD & LEONARD BRIDGMAN OF PROGATE & LONDON, ENGLAND FOR SQUADRON MARKINGS; REFERENCE: "CAMOUFLAGE" 1914 TO 1918.

AIR AGE INC., 551 FIFTH AVE., NEW YORK 17, N.Y.
SCALE: ¼" = 1'-0"
DATE:
DRAWN BY ... W.A.WYLAM
GENERAL ARRANGEMENTS
ENGLISH SOP WITH "DOLPHIN"
5F.1

© 1947 WILLIAM A. WYLAM

AIR AGE INC., 551 FIFTH AVE., NEW YORK 17, N.Y.

SCALE: 1/4" = 1'-0"

DATE:

DRAWN BY .... W.A.WYLAM

FUSELAGE DETAILS ENGLISH SOPWITH "DOLPHIN"

5F.1

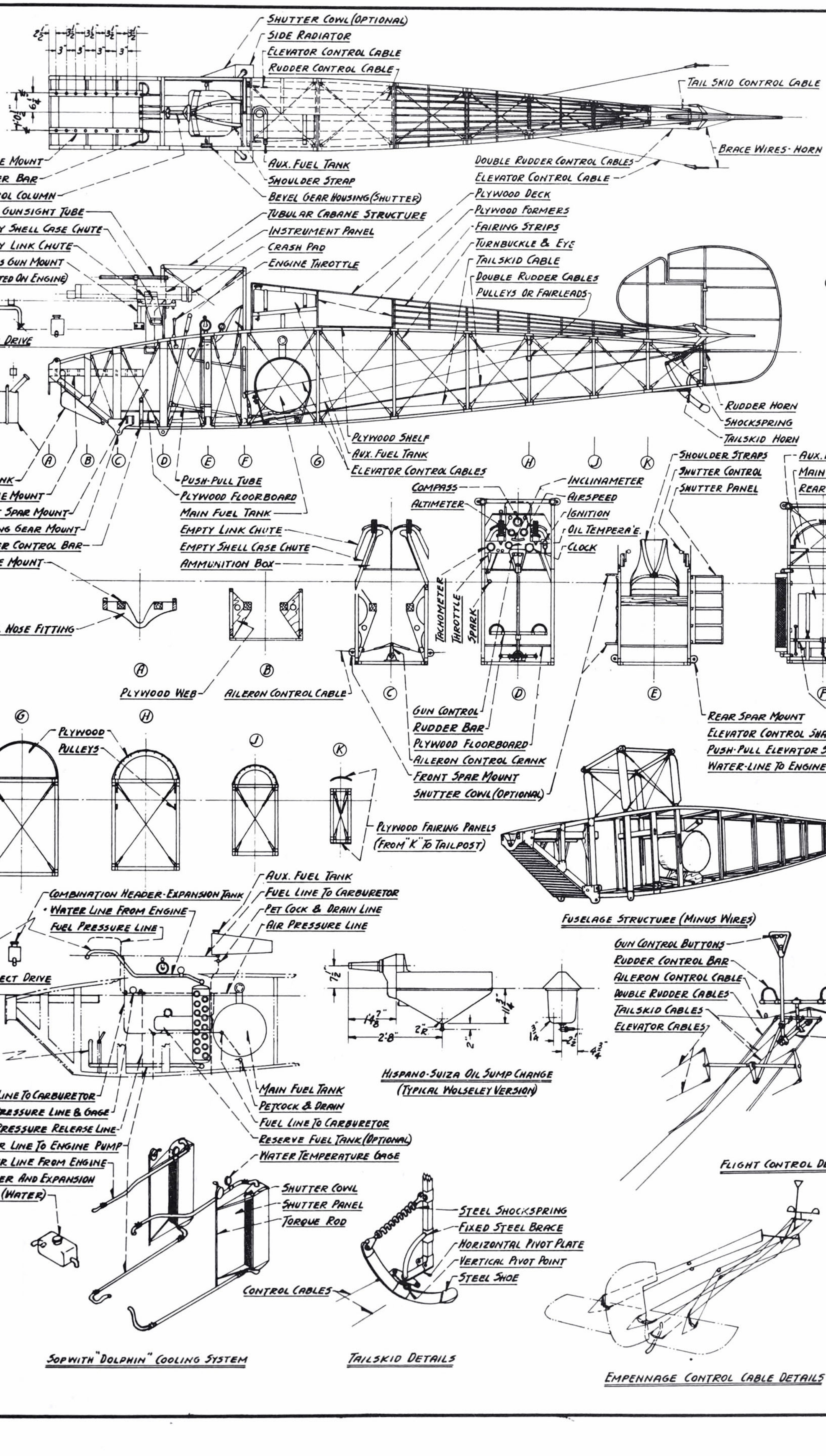

SOPWITH "DOLPHIN" COOLING SYSTEM

TAILSKID DETAILS

FLIGHT CONTROL DETAILS

EMPENNAGE CONTROL CABLE DETAILS

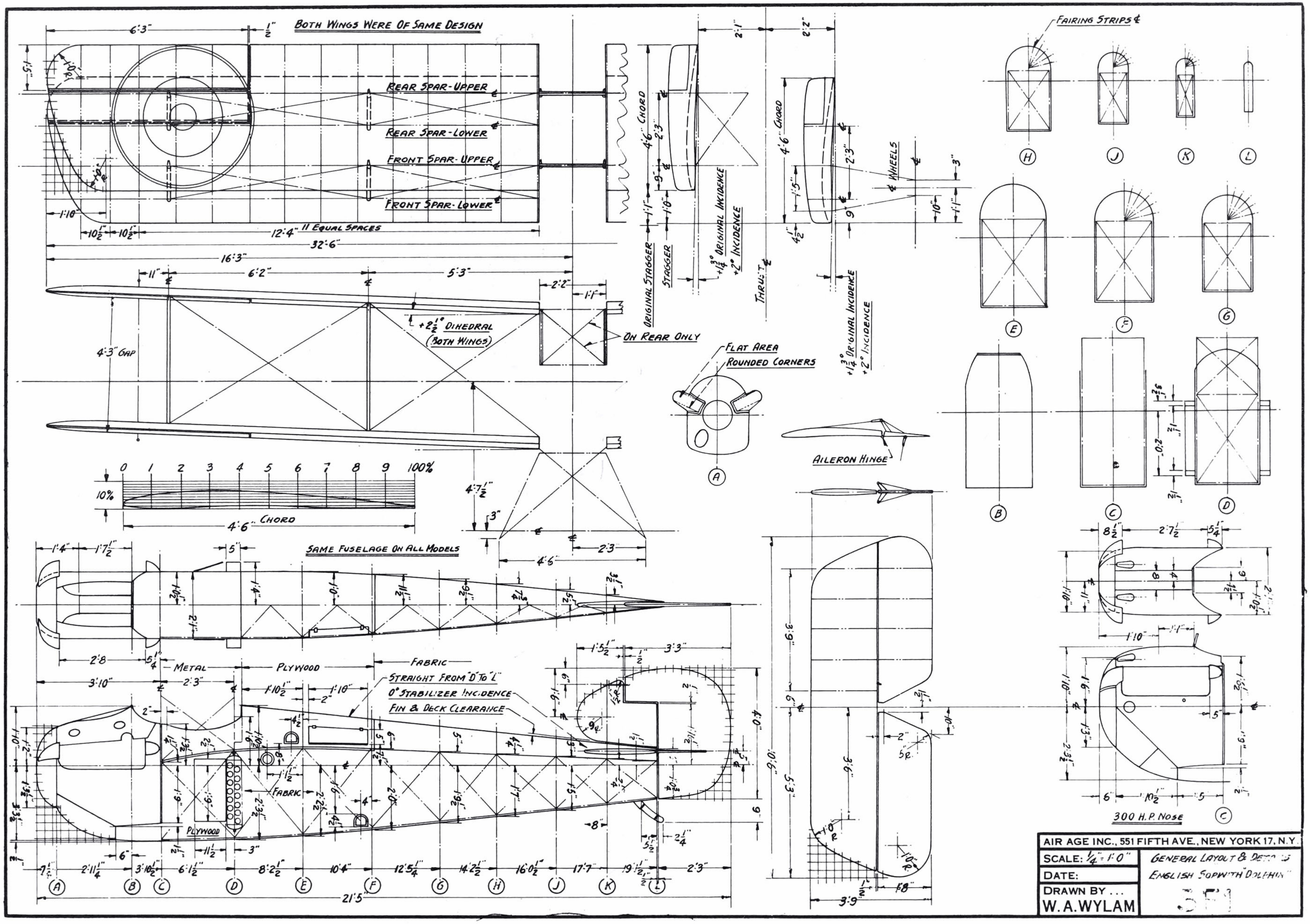
BOTH WINGS WERE OF SAME DESIGN
REAR SPAR-UPPER
REAR SPAR-LOWER
FRONT SPAR-UPPER
FRONT SPAR-LOWER
11 EQUAL SPACES
32'-6"
16'-3"
4'-3" GAP
+2½° DIHEDRAL (BOTH WINGS)
ON REAR ONLY
ORIGINAL STAGGER
STAGGER
4'-6" CHORD
+1¾° ORIGINAL INCIDENCE
+2° INCIDENCE
THRUST
WHEELS
FAIRING STRIPS
FLAT AREA
ROUNDED CORNERS
AILERON HINGE
SAME FUSELAGE ON ALL MODELS
METAL
PLYWOOD
FABRIC
STRAIGHT FROM "D" TO "L"
0° STABILIZER INCIDENCE
FIN & DECK CLEARANCE
300 H.P. NOSE
AIR AGE INC., 551 FIFTH AVE., NEW YORK 17, N.Y.
SCALE: ¼" = 1'-0"
DATE:
DRAWN BY ...
W. A. WYLAM
GENERAL LAYOUT & DETAILS
ENGLISH SOPWITH "DOLPHIN"

Sopwith Snipe 7F.1

drawings by JOSEPH NIETO

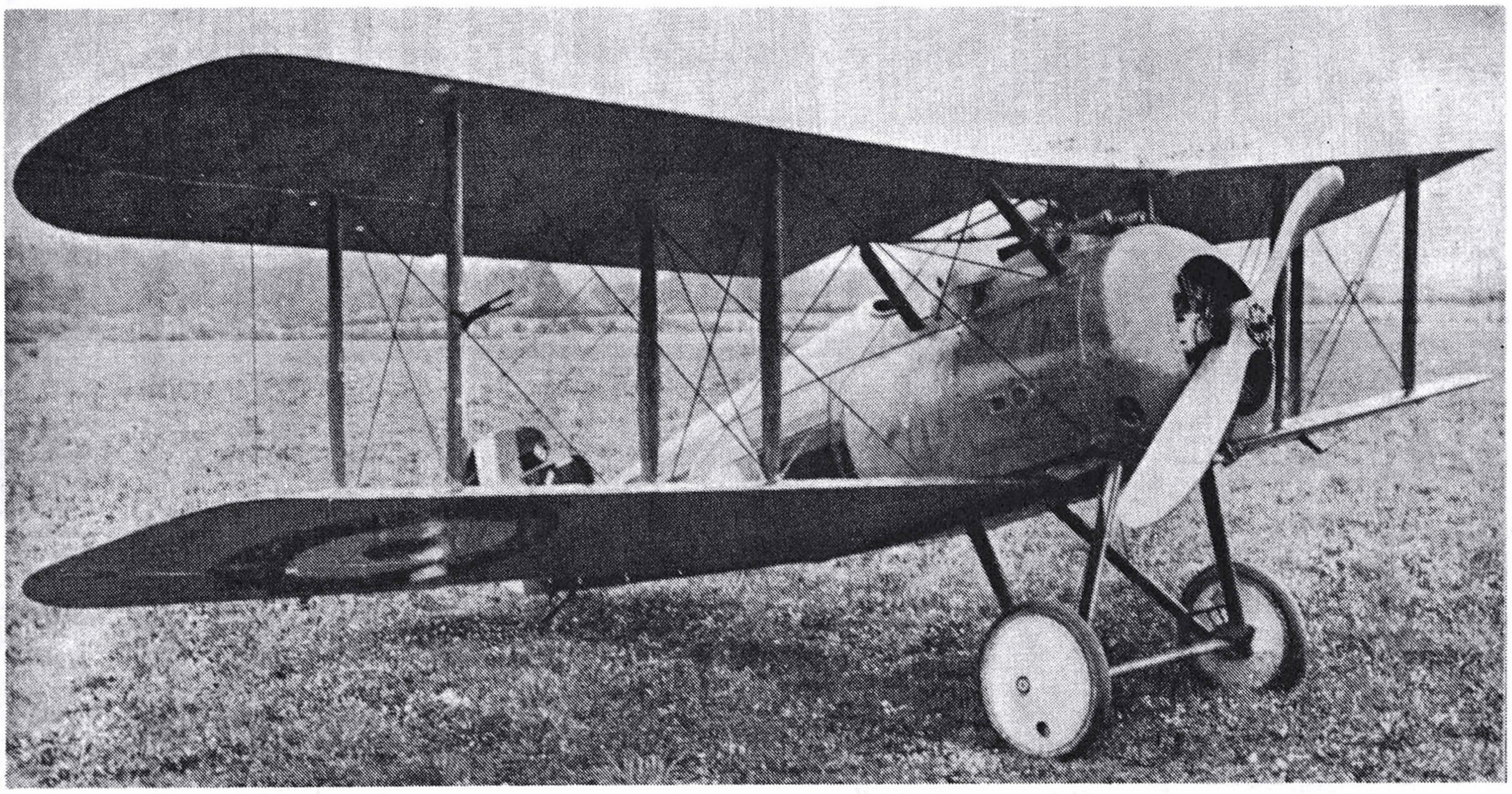

The Sopwith Snipe 7F.1 followed the successful Sopwith Camel and was used by the British until 1926. Air Age file photo.

INTRODUCED as a successor to the famous Sopwith Camel, the Snipe first reached the Western Front in September 1918. In the three months before the war's end it proved the best of the Allied fighters, though less than a hundred were in action. It was while flying a Snipe that Major W.G. Barker of No. 201 Squadron fought his celebrated single-handed engagement with 15 Fokker D.VIIs on October 27, 1918, for which he was awarded the Victorian Cross. The fuselage of Barker's aircraft is to be seen at the Canadian War Museum in Ottawa.

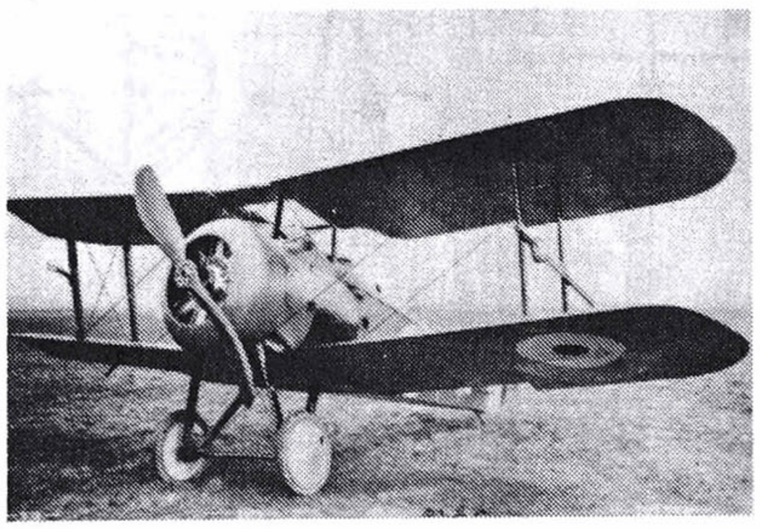

The prototype Snipe had single-bay wings. Photo courtesy of Leonard Opdycke, WW I Aeroplanes.

Of a wooden structure and fabric covering, the makers' designation of the aircraft was the Sopwith 7F.1. Powered by a Bentley B.R.2 engine that developed 230 hp, the Snipe was able to achieve a maximum speed of 121 mph at 10,000 feet and had a rate of climb of 970 fpm.

Due to financial stringencies applied to the British air services, the Snipe remained active with fighter squadrons until as late as 1926.

Four other Snipes can be seen in other museums. □

ILLUSTRATED BELOW IS THE SOP. SNIPE FLOWN BY GERALD T. MUIR WHEN WITH # 70 SQDN. AT COLOGNE IN 1918. THE THREE VERTICAL WHITE STRIPES WERE FORMERLY THE INSIGNIA OF # 73 SQDN. (SOP. CAMELS) AND WAS ADOPTED BY # 70 SQDN. IN MARCH OF 1918.

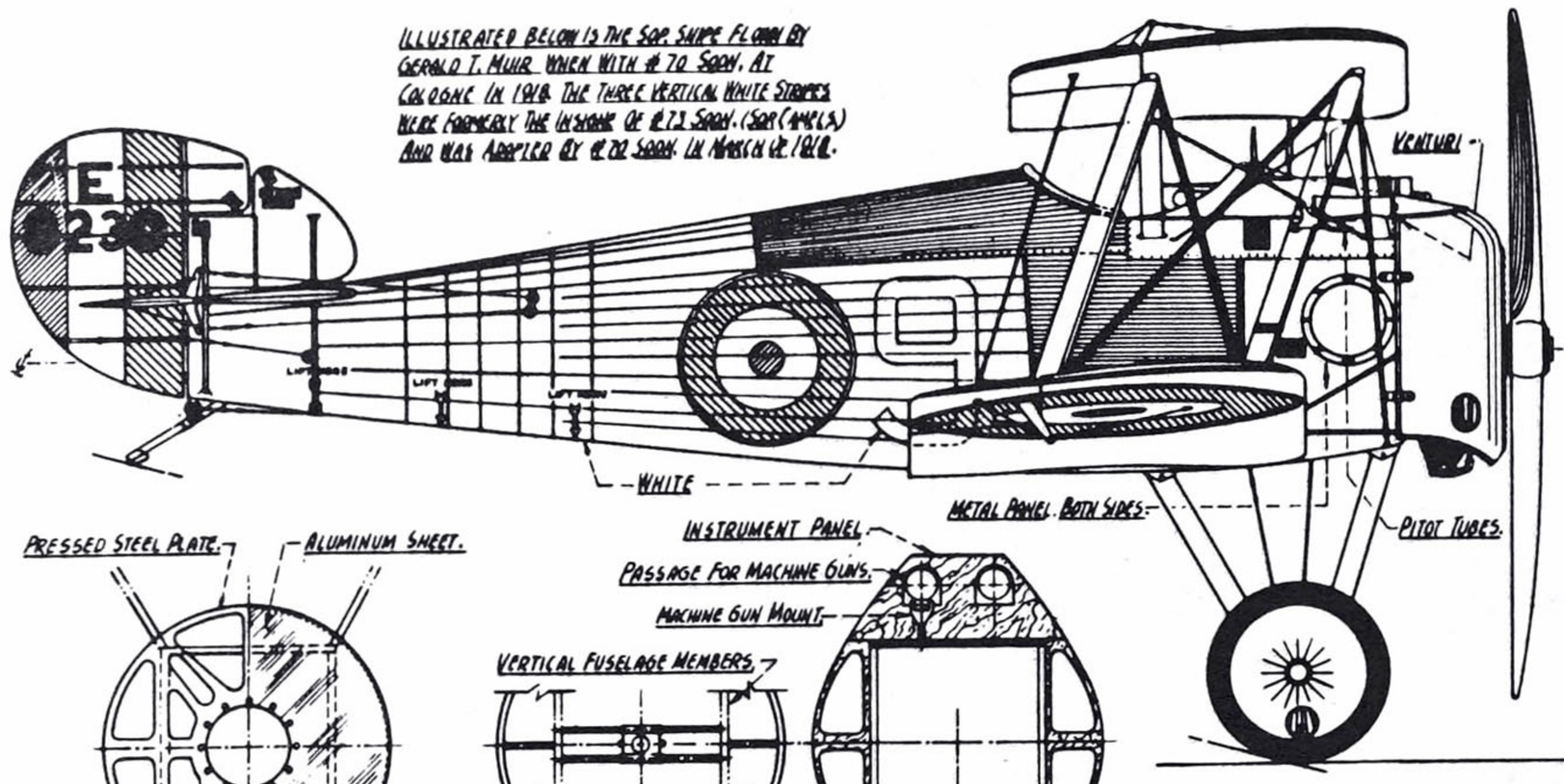

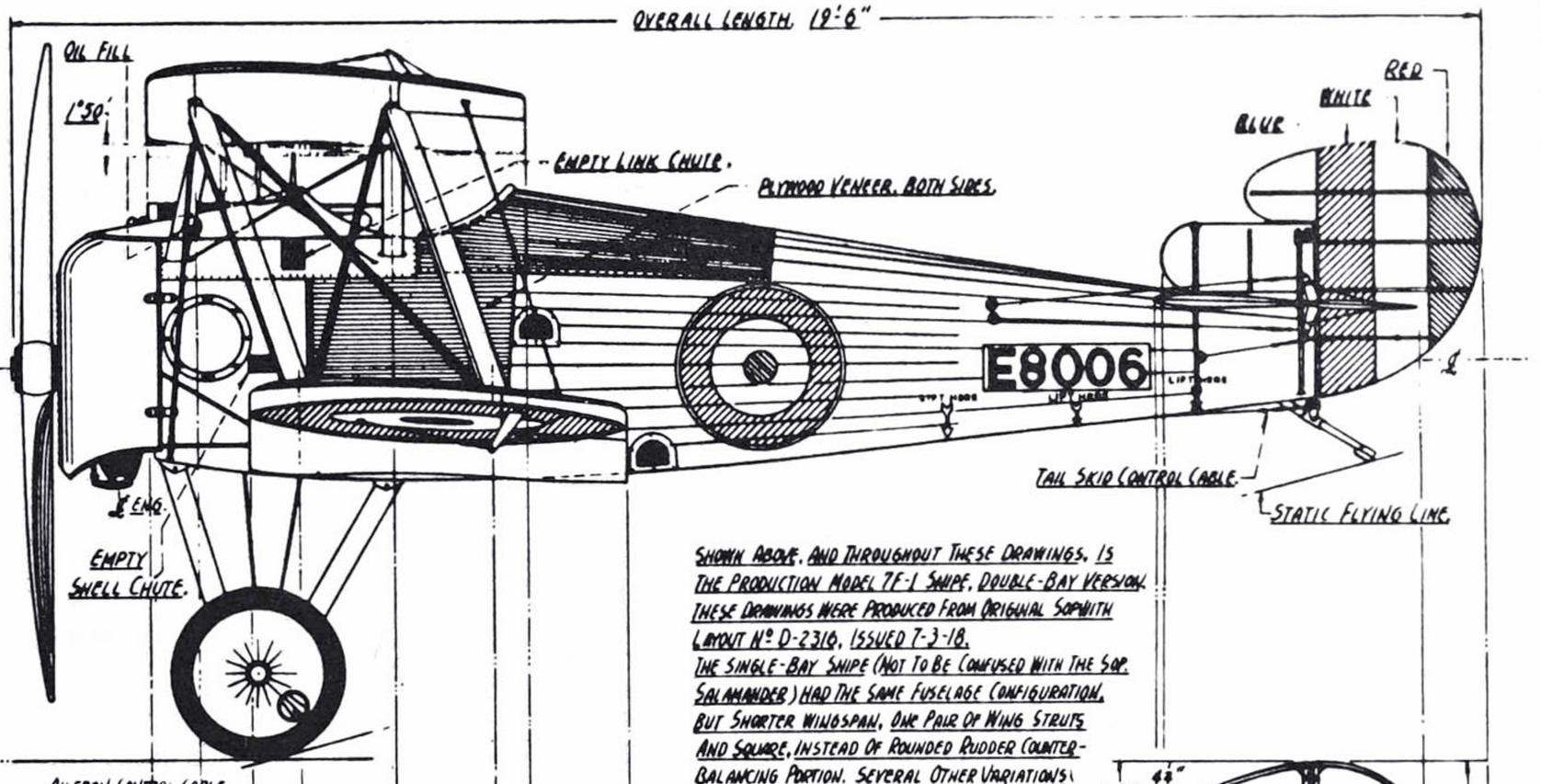

SHOWN ABOVE, AND THROUGHOUT THESE DRAWINGS, IS THE PRODUCTION MODEL 7F-1 SNIPE, DOUBLE-BAY VERSION. THESE DRAWINGS WERE PRODUCED FROM ORIGINAL SOPWITH LAYOUT Nº D-2316, ISSUED 7-3-18.
THE SINGLE-BAY SNIPE (NOT TO BE CONFUSED WITH THE SOP. SALAMANDER) HAD THE SAME FUSELAGE CONFIGURATION, BUT SHORTER WINGSPAN, ONE PAIR OF WING STRUTS AND SQUARE, INSTEAD OF ROUNDED RUDDER COUNTER-BALANCING PORTION. SEVERAL OTHER VARIATIONS EXISTED AMONG THE SNIPES, SUCH AS IN RUDDER AND V-FIN DESIGN, FUSELAGE CONFIGURATION, AND CENTER-SECTION CABANE ABOVE THE PILOT.

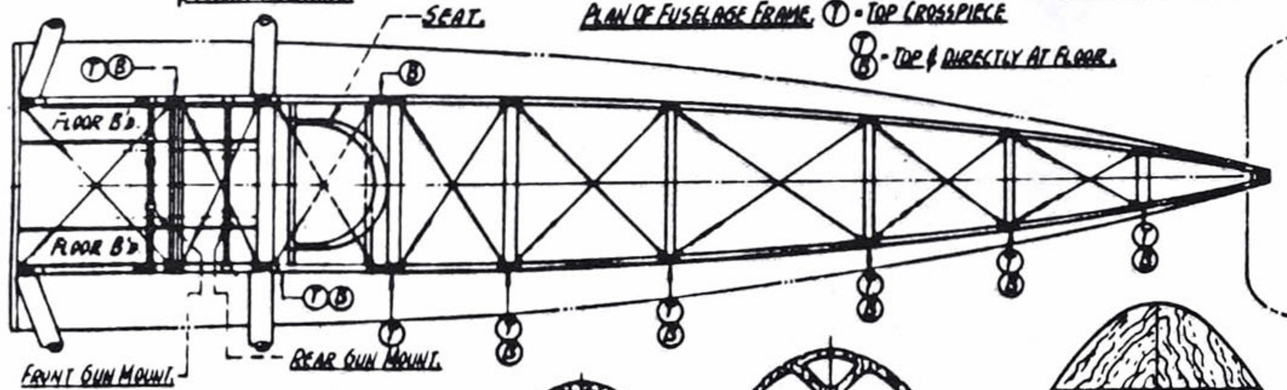

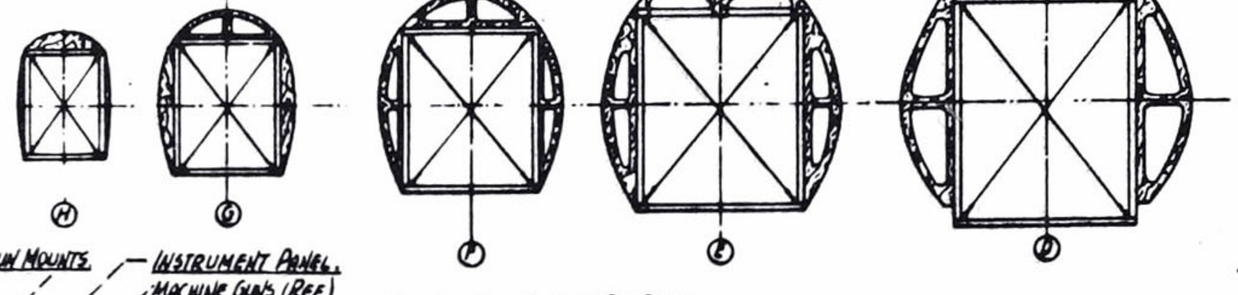

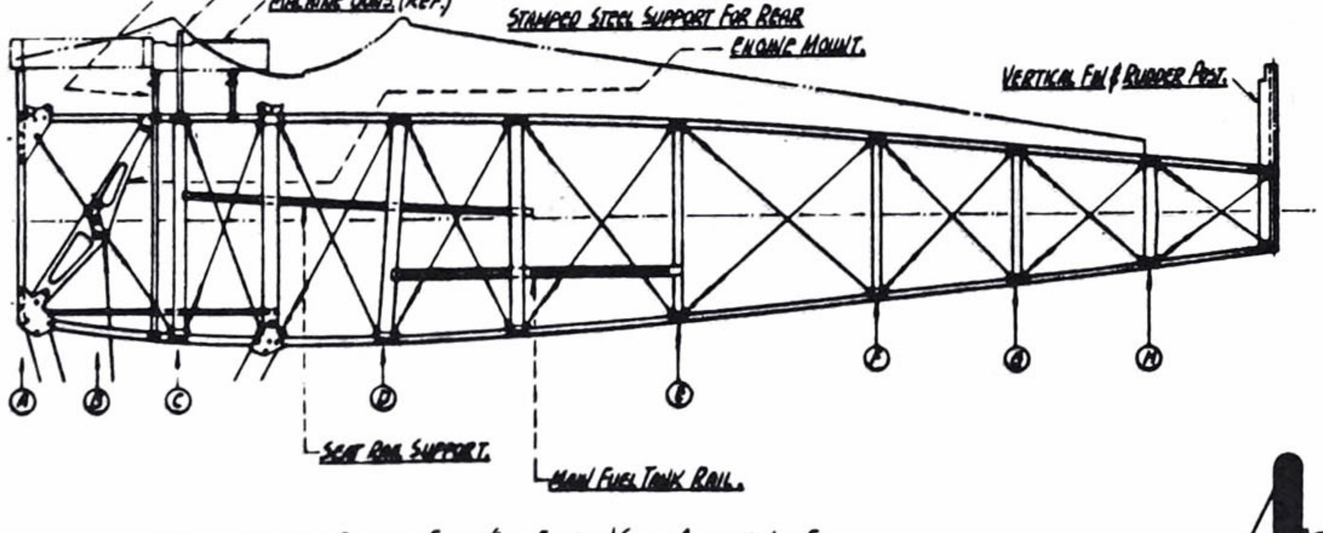

VIEW ABOVE OUTLINES FUSELAGE FRAME (LESS FAIRINGS) STRUT ATTACHMENTS, ETC.

VIEW SHOWN BELOW SHOWS LANDING GEAR FROM ABOVE, AS IF "ROLLED FORWARD" FROM BENEATH PLAN AT RIGHT.

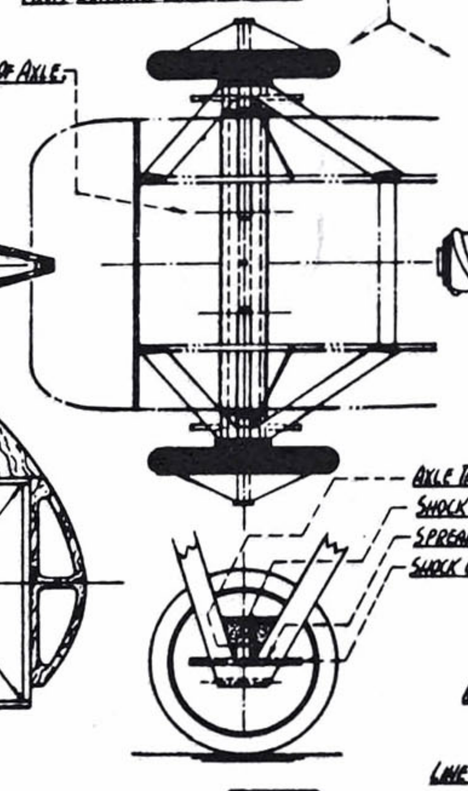

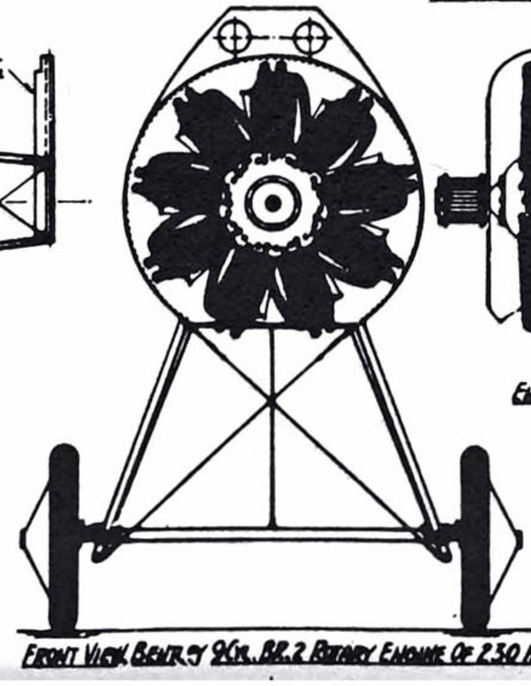

FRONT VIEW, BENTLEY 9CYL. BR.2 ROTARY ENGINE OF 230 H.P.

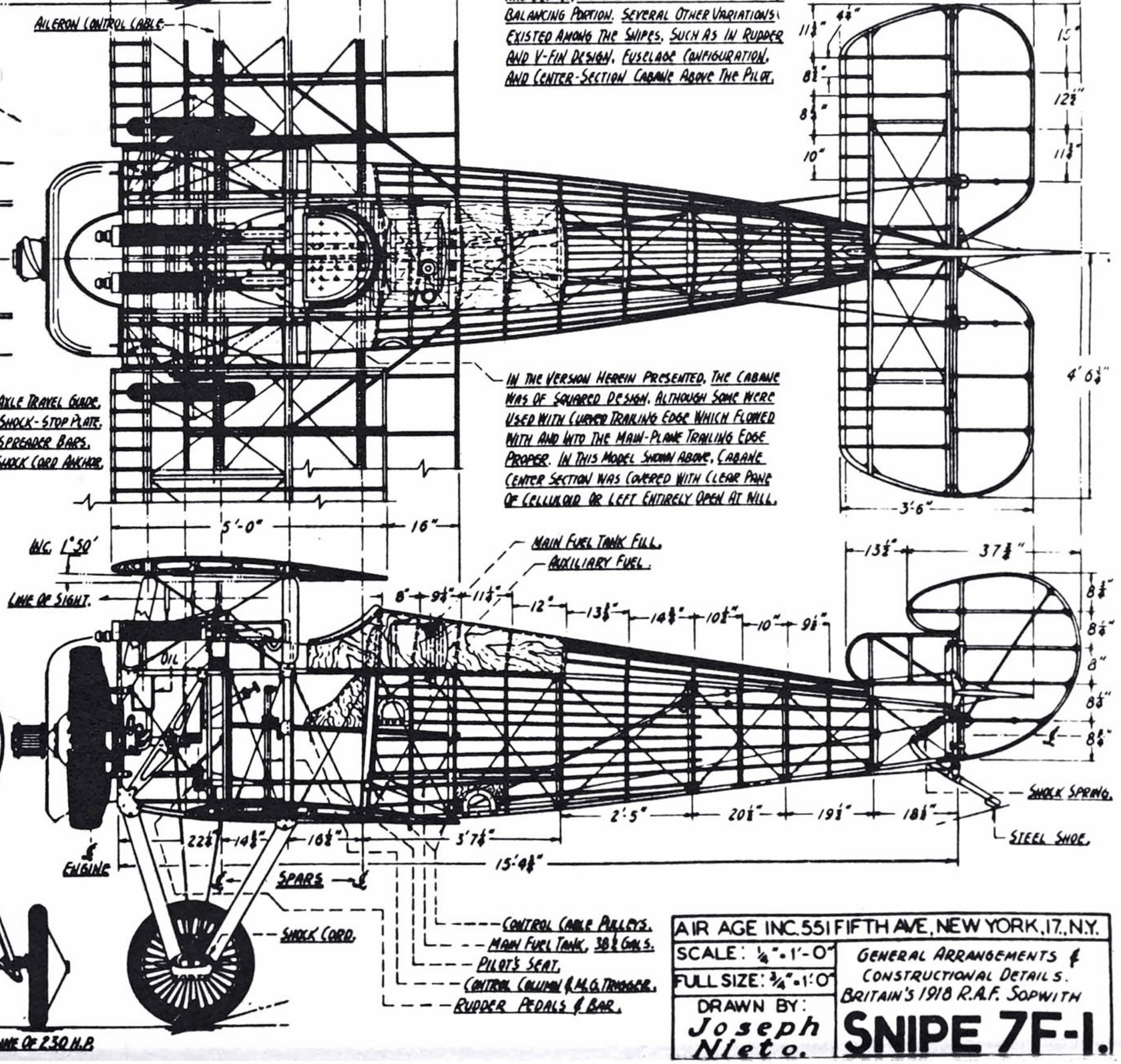

IN THE VERSION HEREIN PRESENTED, THE CABANE WAS OF SQUARED DESIGN, ALTHOUGH SOME WERE USED WITH CURVED TRAILING EDGE WHICH FLOWED WITH AND INTO THE MAIN-PLANE TRAILING EDGE PROPER. IN THIS MODEL SHOWN ABOVE, CABANE CENTER SECTION WAS COVERED WITH CLEAR PANE OF CELLULOID OR LEFT ENTIRELY OPEN AT WILL.

AIR AGE INC. 551 FIFTH AVE, NEW YORK, 17, N.Y.	
SCALE: ¼"-1'-0"	GENERAL ARRANGEMENTS & CONSTRUCTIONAL DETAILS. BRITAIN'S 1918 R.A.F. SOPWITH
FULL SIZE: ¾"-1'-0"	SNIPE 7F-1.
DRAWN BY: Joseph Nieto.	

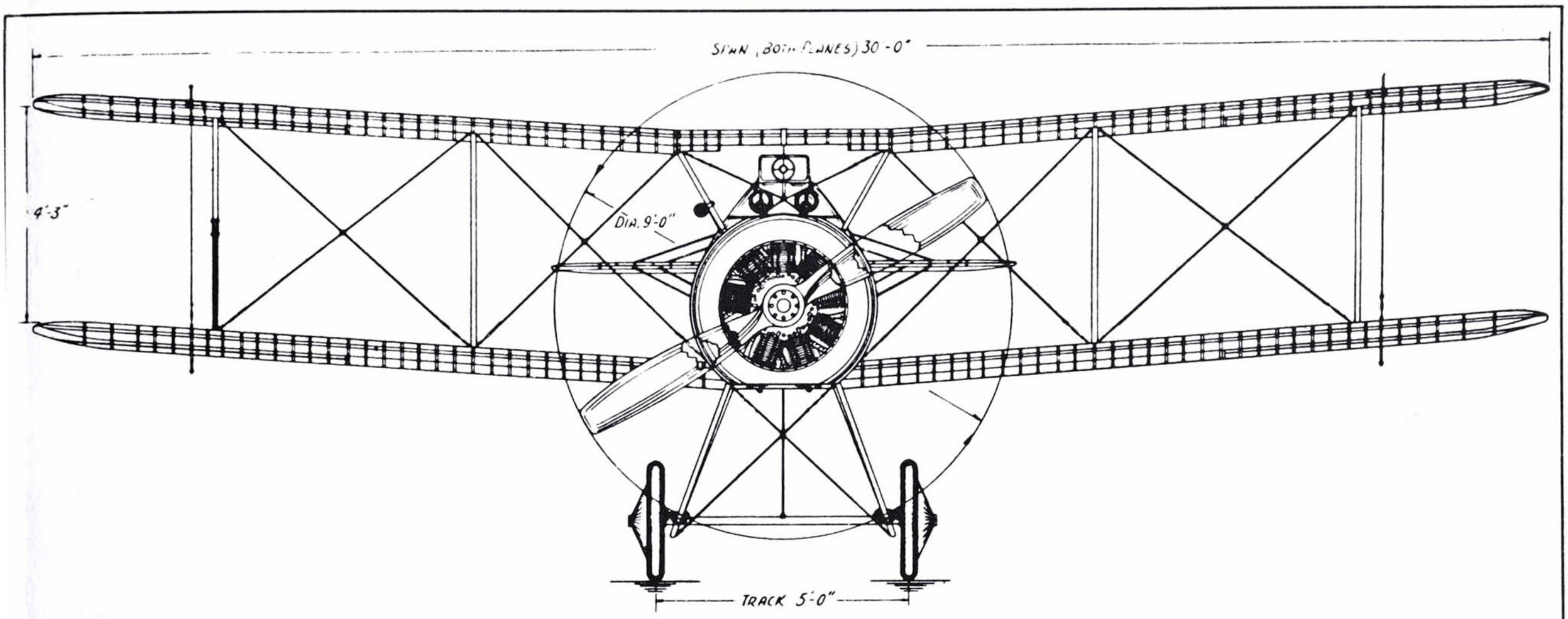

THE BRITISH SOPWITH "SNIPE" SINGLE SEATER FIGHTER TYPE 7F-1 OF 1918, WAS BUILT BY SOPWITH AVIATION CO. LTD, KINGSTON ON THAMES, ENGLAND, AND IS REPUTED TO HAVE BEEN THE BEST ALL-ROUND FIGHTING SCOUT PRODUCED BY ANY NATION DURING THE FIRST WORLD WAR. IN DEFINING IT'S APPROPRIATE NICKNAME, "TO SHOOT FROM A CONCEALED PLACE AT THOSE WHO BECOME DETACHED FROM A MAIN BODY OR FORCE", THE SNIPE WAS FIRST ATTACHED TO THE BRITISH R.F.C, FEB. 4, 1918, SERVING CONTINUOUSLY THROUGH NOV. 11, AND SUBSEQUENTLY CARRIED ON WITH R.A.F. FIGHTER SQUADRONS UNTIL THE MIDDLE TWENTIES. MASS PRODUCTION ON THE SNIPE WAS STARTED IN THE LATTER HALF OF 1918, AND BY DECEMBER OF THAT YEAR, 500 HAD BEEN BUILT. OF THAT NUMBER, 79 OF THEM WENT TO Nº 43 SQDN. AT BOUVINCOURT, IN SEPT. 1918, REPLACING CAMELS, Nº 71 SQDN. (Nº 4 AUSTRALIAN, A.F.C.) AT ENNETIERES, IN NOVEMBER, IN PLACE OF CAMELS, Nº 81 SQDN. (ARRIVING AT THE WESTERN FRONT IN SEPT. 1918 WITH SNIPES) Nº 201 & 208 (8 NAVAL) BOTH REPLACING BENTLEY CAMELS. PERHAPS THE MOST FAMED SNIPE WAS THAT FLOWN BY MAJOR W. G. BARKER, WHILE C.O. OF Nº 201, WHICH REPLACED CAMELS WITH SNIPES IN SEPT. 1918. BARKER RECEIVED THE COVETED VICTORIA CROSS AFTER BEING ATTACKED BY 60 GERMAN PLANES, HE FOUGHT BACK, DOWNING 4 FOKKERS IN FLAMES AND PUT 10 OTHERS OUT OF CONTROL. HIS OFFICIAL RECORD FOR THE DAY WAS 4 VICTORIES, WHICH BROUGHT UP THE TOTAL TO 52. (BARKER'S SNIPE WAS IDENTIFIED BY A SINGLE WHITE, VERTICAL BAR JUST AFT OF THE FUSELAGE COCKADE.) A SINGLE SNIPE SQUADRON ACCOUNTED FOR 36 ENEMY PLANES IN 4 DAYS, DOWNING 13 OF THESE IN ONE DAY. IN THE SHORT TIME OF ACTION WHICH THE SOPWITH SNIPE HAD AT IT'S DISPOSAL IN 1918, IT MADE AN ENVIABLE REPUTATION FOR ITSELF WHICH BODE NO JOY FOR THE EXHAUSTED PILOTS OF THE GERMAN AIR SERVICE.

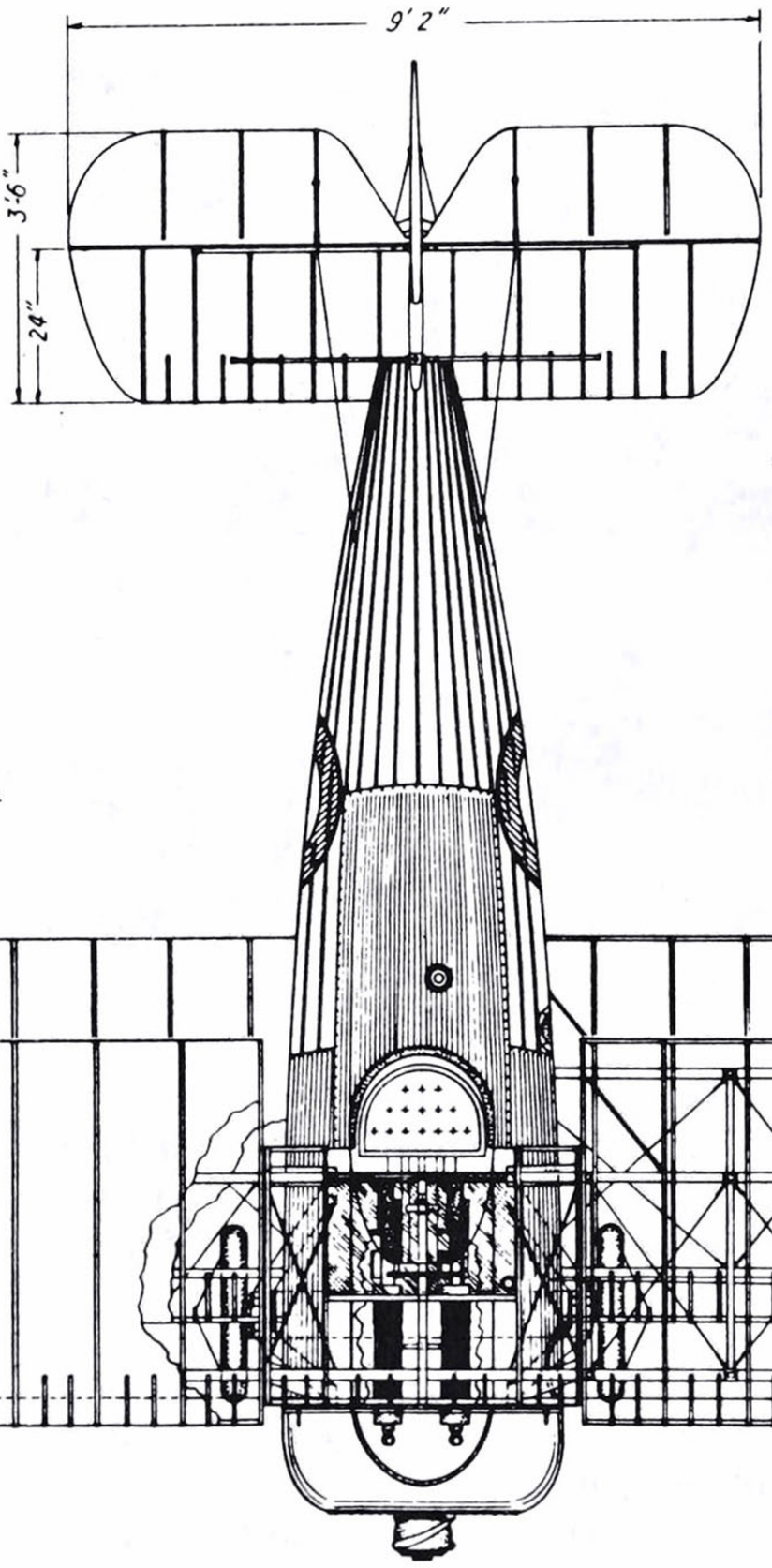

UNDOUBTEDLY, THE SNIPE SAW SERVICE IN OTHER SQUADRONS NOT RECORDED HEREWITH, AMONG THESE PERHAPS, WERE Nº 70 SQDN. FIRST TO GET CAMELS IN JULY, 1917, IN WHICH SERVED GERALD I. MUIR OF AUSTRALIA, A WAR 1 AVIATION PILOT, ILLUSTRATOR, PHOTOGRAPHER-COLLECTOR AND FRIEND OF THE AUTHOR, WHOSE SNIPE IS SHOWN IN THESE DRAWINGS WHILE Nº 70 WAS CAMPED AT COLOGNE IN 1918. (NOTE: A SOP. SNIPE, FITTED WITH AN A.B.C. ENGINE, ATTAINED A SPEED OF 156 M.P.H. AND CLIMBED TO 10,000 FT. IN 4½ MIN.)

SPECIFICATIONS. (DOUBLE BAY VERSION.)

SPAN. (BOTH WINGS) VARIATIONS EXISTED.	30'-0"
OVERALL LENGTH.	19'-6"
HEIGHT AT CENTER SECTION.	8'-9"
" " WING TIPS.	9'-7"
WING SURFACE INCLUDING AILERONS.	256 ☐ft
DIHEDRAL ANGLE, BOTH WINGS.	4°
INCIDENCE " "	1° 50'
CHORD " "	5'-0"
GAP " "	4'-3"
STAGGER (POSITIVE)	1'-4"
HORIZONTAL TAIL PLANE AREA, TOTAL.	26 ☐ft
VERTICAL " " "	11.75 ☐ft
WING LOADING. (IN POUNDS)	7.5 ☐ft
POWER LOADING. (IN POUNDS PER H.P.)	8.86
WEIGHT EMPTY.	1312 LBS.
" OF FUEL & OIL. (38½ PETROL & 7 GALS. OIL.)	343 "
MILITARY LOAD & CREW.	365 "
GROSS WEIGHT OF SHIP.	2020 "

ENGINE: 9 CYL. BENTLEY BR.2 ROTARY OF 200-230 H.P.

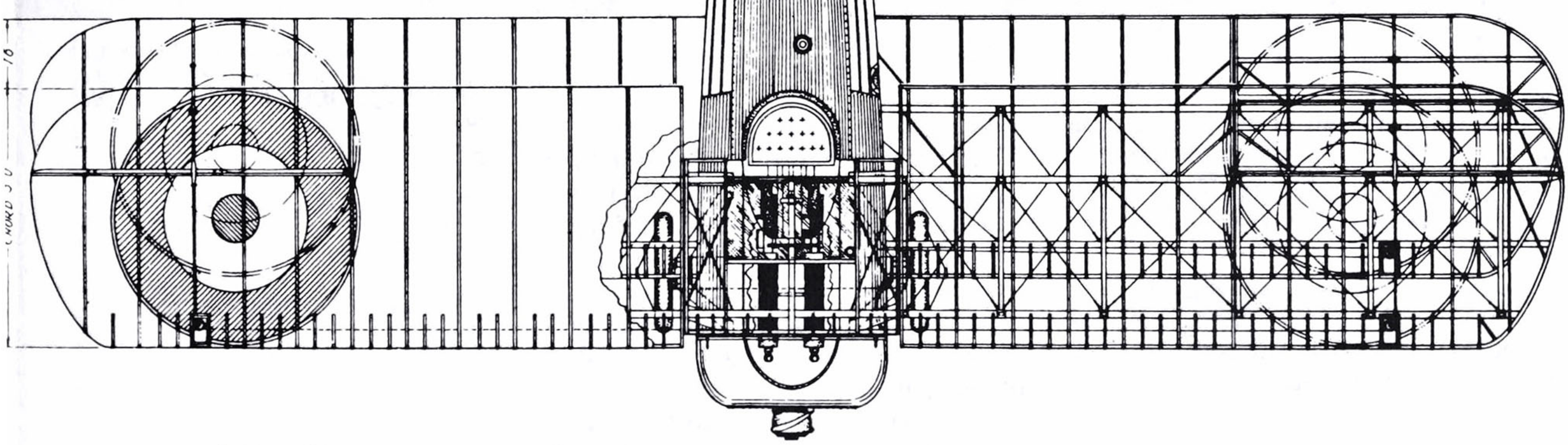

- PERFORMANCE -

NORMAL BRAKE H.P & R.P.M. @ GROUND LEVEL.		228 AT 1300 R's.
SPEED	TAKE OFF,	AT 6500 FT.
"	60 M.P.H.	" 10000 "
"	116 "	" 15000 "
"	121 "	" 16500 "
"	113 "	" LANDING.
"	108.5 "	
"	40 "	
CLIMB.	6500 FT. IN 5.2 MIN.	AT 970 FT. PER. MIN.
"	10000 " 9.4 "	" 710 " " "
"	15000 " 18.8 "	" 390 " " "
"	16500 " 23.2 "	" 290 " " "
SERVICE CEILING		20,500 FT.
MAX ENDURANCE		3 HRS.
RANGE.		370 MILES.
ARMAMENT	TWIN VICKERS G.S. SYNCH. GUNS.	
SIGHTS.	OPTIONAL REFLECTING TUBE MARK I OR TYPE B2 GUNSIGHT.	

MANY, MOST SINCERE THANKS TO KENNY ERNST, INDIANAPOLIS, IND., PAUL R. MATT, CINCINNATI, OHIO, DAVE WILLIAMS, IOWA CITY, IOWA, & TO BOB ZOOK, BILL KEE, BERGEN HARDESTY, & PETER L. GREY, (LL'TON. BEDS. ENG.) AND ALL OTHER SUCH AVID ENTHUSIASTS WHO HAVE SO GENEROUSLY COLLABORATED WITH ME IN THIS AND WORKS THAT FOLLOW. J. Riley.

- CONSTRUCTION -

ENTIRE PLANE WAS FABRIC COVERED WOOD CONSTRUCTION. METAL NOSE COWL & SIDE ENGINE PANELS. PLY. VENEER SIDES & REAR OF COCKPIT.
EXTERNAL WING BRACING & TAIL, STREAMLINED STEEL CABLES. (TIERODS.)

- COLOR SCHEME -

ENTIRE PLANE COLOURED OLIVE-DRAB (BRITISH KHAKI-GREEN.) METAL PARTS WERE EITHER POLISHED OR PAINTED LIGHT GRAY. LOWER SURFACE OF WINGS EITHER LEFT OLIVE-DRAB, OR PAINTED LIGHT IVORY, CREAM, OR SKY BLUE. INSIGNIA COLOURING NOTED, NUMERALS BLACK & WHITE OUTLINE WHERE SO REQUIRED AS SHOWN.

COST OF SOPWITH SNIPE TO R.A.F. £995. 17s.

ADDITIONAL DATA. COCKADE INSIGNIA SAME DIMENSIONS AS ON SE-5, CHORD BEING 60", OVERALL DIA OF COCKADE, 59" WITH ½" CLEARANCE AT LEADING & TR. EDGES. NARROW ENCIRCLING WHITE RING, ¾" WIDE. BLUE, WHITE & RED SECTIONS, EQUAL WIDTH OR 11½". COCKADES ON FUSELAGE SIDES WERE ROUGHLY HALVED.

Spad S.VII C.1

drawings by WILLIAM WYLAM

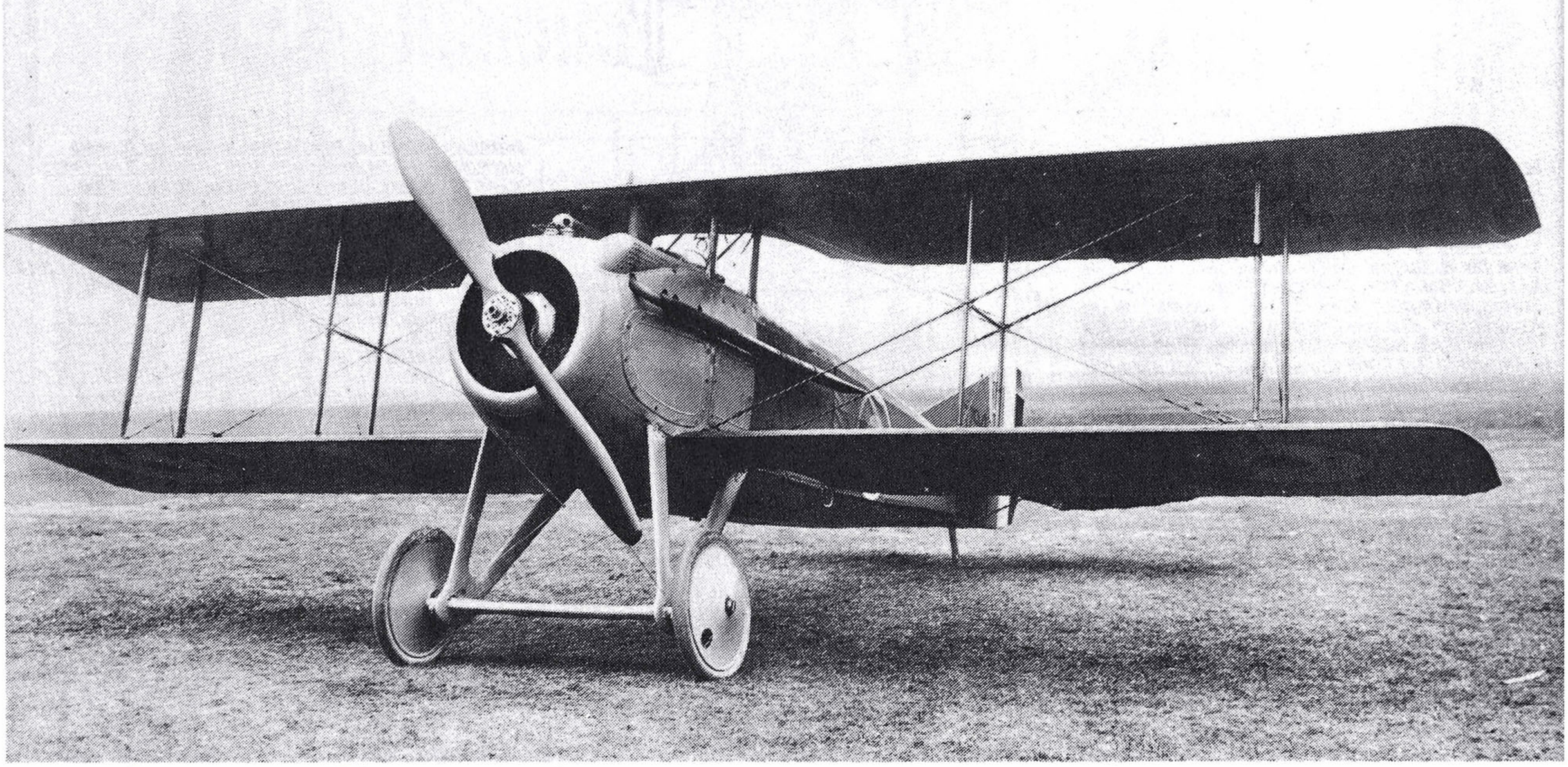

A very famous airplane, the French-built Spad VII had an excellent performance capability for WW I pilots. Air Age file photo.

IT WAS A nervous group of men that stood on Bleriot Field one morning in July 1916, when the first S.VII was about to demonstrate the theories of its engineers.

After successfully producing the Spad A.I to the order of the Russian government in early 1915, the designers rushed to their boards to reconfigure the platform for the then-radical engine designed by Marc Birkigt, the brilliant designer of engines for Hispano-Suiza motor car company. In addition, the youthful M. Bechereau, designer of Deperdussin's record-breaking racing monoplanes of 1912 and 1913 fame, and Louis Bleriot, famed Channel flier and aerodynamic progressive, were among the firm's design staff.

Bechereau was made chief engineer with a free hand as far as designs were concerned. The result was the Spad (Societe Pour Aviation et ses Derives) S.VII.

At the conclusion of the first test flight the fears of the designers were dismissed. Sea-level speed proved to be 123.5 mph, about 5 mph more than anticipated. The rate of climb was quite good, as it attained an altitude of 10,000 feet in 9 minutes 50 seconds, and it found a service ceiling of 15,000 feet.

The Spad was retired from replacement stores early in 1918, although several squadrons continued to operate right up to the Armistice. Several hundred S.VIIs were constructed in England for the RAF and they were supplied in large numbers to other Allied forces.

Ten Spad VII's still exist. □

S.VII

AIR AGE INC., 551 FIFTH AVE., NEW YORK 17, N.Y.

SCALE: 1/4" = 1'-0"

DATE:

DRAWN BY ... W.A.WYLAM

GENERAL FUSELAGE DETAILS

SPAD 150 H.P. HISPANO-SUIZA

20'-3 1/2" OVERALL

3'-0"

1'-10 1/2"

1'-8"

7'-11" PROPELLER DIA.

1'-10"

4'-11 1/2"

1'-0"

1'-5"

No 1 CYLINDER

M.G.

PHOTO

FIXED 30 CAL. VICKERS GUN
RING GUN SIGHT
EXPANSION TANK RELIEF VALVE
AUX. FUEL TANK LINE
FUEL TANK COVER

AILERON HORN - THRU CLEARANCE HOLE
FIXED TRANSPARENT SIDE PANELS
DURALUMINUM COCKPIT COWLING
LEATHER CUSHION
FABRIC COVERED TURTLEDECK
PLYWOOD PANEL

WIRE & EYES RUDDER HINGE
SLIDING INSPECTION PANEL
FIXED METAL PANEL
RUDDER CONTROL CABLE
FIXED STABILIZER FIN
FIXED HORIZONTAL STAB'R.
CURVED PLYWOOD TOP
REMOVABLE PANEL (LEFT SIDE ONLY)

RED
WHITE
BLACK
BLUE

1" TYPE NUMBER
SQUADON NO.
9" R.

VII
17

AILERON PUSH-PULL ROD
BELL-CRANK PIVOT
FUEL TANK PLUG
3" DIA. STEEL TUBING
MANIFOLD COUPLING
FUEL TANK SUPPORT BANDS
SLIDING DURALUMINUM PANEL
GAS TANK SUMP & VALVE

BLACK & GREYISH-WHITE STORK
FLATTENED MANIFOLD END
STEEL TAILSKID SHOE
FAIRING STRIPS
COTTON CORD TRAILING EDGE
SPRUCE MAIN SPARS
STEEL TORQUE TUBING
FIXED STABILIZER STRUT
PLYWOOD LEADING EDGE
TAIL SKID OPENING
PLYWOOD PANEL

1915-16 FRENCH COLOR SCHEME
ENGINE COWLINGS: BLACK
ALL FABRIC SURFACES: SILVER
WING STRUTS, FUSELAGE FRAMEWORK, PROP'R. & LANDING GEAR: VARNISH

1917-18 FRENCH COLOR SCHEME

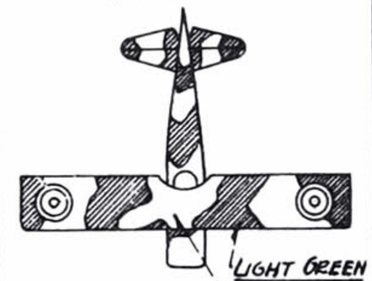

LIGHT GREEN
BUFF

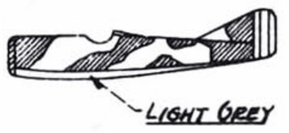

LIGHT GREY

NOTES:
ALL COLORS WERE FADED TO DEADEN REFLECTION. ENTIRE UPPER & SIDE SURFACES WERE CAMOUFLAGED. ENTIRE LOWER SURFACES WERE LIGHT GREY. ALL WING STRUTS, FRAMEWORK & LANDING GEAR WERE VARNISH.

NOTES:
PLANS ON MODEL "A" HISPANO-SUIZA WERE PUBLISHED IN SEPTEMBER 1945 ISSUE OF MODEL AIRPLANE NEWS.

AIRSPEED INDICATOR
REMOVABLE PANEL
DULL-BLACK MANIFOLD
GAS TANK SUPPORT BANDS
GAS. TANK SUMP & VALVE
FIXED RAD. SHELL
RADIATOR DRAIN
OIL SUMP DRAIN
ENGINE DRAIN
REMOVABLE PANEL
SEMI-FIXED COWLING

6 1/2" 5'-3" 1'-3"

CAMERA APERTURE (OPTIONAL)
FAIRING STRIPS
RIVETS
PLYWOOD FORMER
TURNBUCKLE & EYE ASSEMBLY
1" SQUARE - SPRUCE LONGERONS, UPRIGHT & CROSS
9/16" x 1/4" SPRUCE FAIRING STRIPS

ENGINE BOLT CENTERS; SEE HISPANO-SUIZA PLANS IN SEPT. 1945 ISSUE OF M.A.N.

CONN. TO ENGINE
RADIATOR MOUNT

5"
3 1/2"
6 1/2"
6 1/2"

RUDDER CONTROL CABLE
RUDDER CONTROL BAR
AMMUNITION CASE
WING BOLT LUGS

AILERON PUSH-PULL ROD
INSTRUMENTS ON SHELF
MAPCASE & HOLDER
GASOLINE STRAINER
GASOLINE LINE TO TANK

CASTED DURALUMINUM HORN
ELEVATOR CONTROL HORN
ELEVATOR HORN BEARINGS
RUDDER CONTROL HORN
COTTON CORD
DRILLED SOLID SPRUCE RIBS
OPENING FOR INSTALLING HORIZONTAL STAB. ASSEMBLY

TAIL SKID RUBBER SHOCK CORD
ELEVATOR CONTROL CABLE FORK
RUDDER CONTROL CABLE FORK
FIXED VERTICAL STABILIZER
FIXED SPRUCE HORIZ. STAB. REST
PLYWOOD FAIRING
DURALUMINUM FITTINGS
TURNBUCKLE & EYE

AILERON PUSH-PULL ROD CONN.
ELEVATOR CABLES CONN.
SUPPORT BEARINGS

RADIATOR OUTLINE
ENGINE MOUNT BED
1/4" x 2" x 2'-4" SPRUCE PLATE
PRESSED PLYWOOD WEB
CASTED DURAL SIDE STIFFNER
PRESSED RECESS FOR PILOT FEET
AMMUNITION BELT CASE
MACHINE GUN MOUNT
EMPTY SHELL CHUTE
WATER-LINE CONN. FROM ENGINE
WATER LINE TO EXP. TANK

GUN OUTLINE
RELIEF VALVE
PEEP SIGHT

FIXED SEAT SUPPORT
PADDED COCKPIT LINING
FLEXIBLE WINDSHIELD
ENGINE CONTROLS
GUN CHARGING HANDLE
PLYWOOD SUPPORT BANDS

CAMERA (OPTIONAL)
ENGINE CONTROLS
GASOLINE LINE
CONTROL COLUMN BEARINGS
PLYWOOD FLOORBOARD

RUBBER SHOCK CORD
DURALUMINUM TUBING
AMMUNITION BELT CASE
PEEP SIGHT

GUN TRIGGER
HICKORY STICK
AILERON QUADRANT
STEEL SHOE
HICKORY SKID
STEEL PIVOT PLATE
GUN CHARGING HANDLE
AMMUNITION CASE
INSTRUMENTS (MOUNTED ON SHELF)

AIRPLANE
PLAN VIEW OF INSTRUMENT SHELF

1/4" PLYWOOD WEB
1/8" PLYWD. STIFFENER
HOLES FOR WATER TO PUMP
WATER LINE TO PUMP
SLIDING DURAL PANEL
FIXED CAM HEAD COWL
RADIATOR MOUNT

CRIMPED SCOT
WIRE LOCK

SEE LOWER R CORNER
1 2 3 4 5 6 7 8

CABANE ADJUSTING TUBE

RING SIGHT
VICKERS GUN
FIREWALL
RECESSED AREA

DETAIL OF EMPTY SHELL CHUTE

DURAL MAP CASE
ENGINE CONTROLS
EMPTY SHELL CHUTE
AILERON PUSH-PULL ROD

PADDED HEADREST
HINGED SEAT - CAMERA ACCESS (SEAT SWINGS FORW. & UPW.)
SAFETY BELT & CUSHION
AERIAL CAMERA (OPTIONAL)
FIXED SEAT SUPPORT
PLYWOOD FLOORBOARD
PLYWOOD FORMERS
VERT. STAB. (FIXED TO FUSE.)
PLYWOOD PANEL (FIXED TO HORIZONTAL STABIL'R.)
ELEVATOR CONTROL HORN

1'-9"
7 1/2"

CONN. TO PUMP
RAD. DRAIN
PLYWOOD

OUTLINE - MODEL "A" HISPANO-SUIZA ENGINE

RUDDER CONTROL BAR
TANK SUPPORT BANDS

MAIN FUEL TANK
LANDING GEAR LUGS
GAS TANK SUMP

DRAIN PLUG

RUBBER SHOCK CORD
DURAL TUBING
PLYWOOD PANEL

INSTRUMENTS
1. OIL PRESS (IN)
2. TACHOMETER
3. AMMETER
4. AIR PRESS (TANK)
5. CLOCK
6. COMPASS
7. ALTIMETER
8. WATER TEMP.

A B C D E F G H J K L M

RADIATOR FACE

AIR AGE INC., 551 FIFTH AVE., NEW YORK 17, N.Y.

SCALE: 1/4" = 1'0"

DATE:

DRAWN BY ... W. A. WYLAM

GENERAL ARRANGEMENTS

SPAD (150 H.P. HISPANO-SUIZA)

S.VII

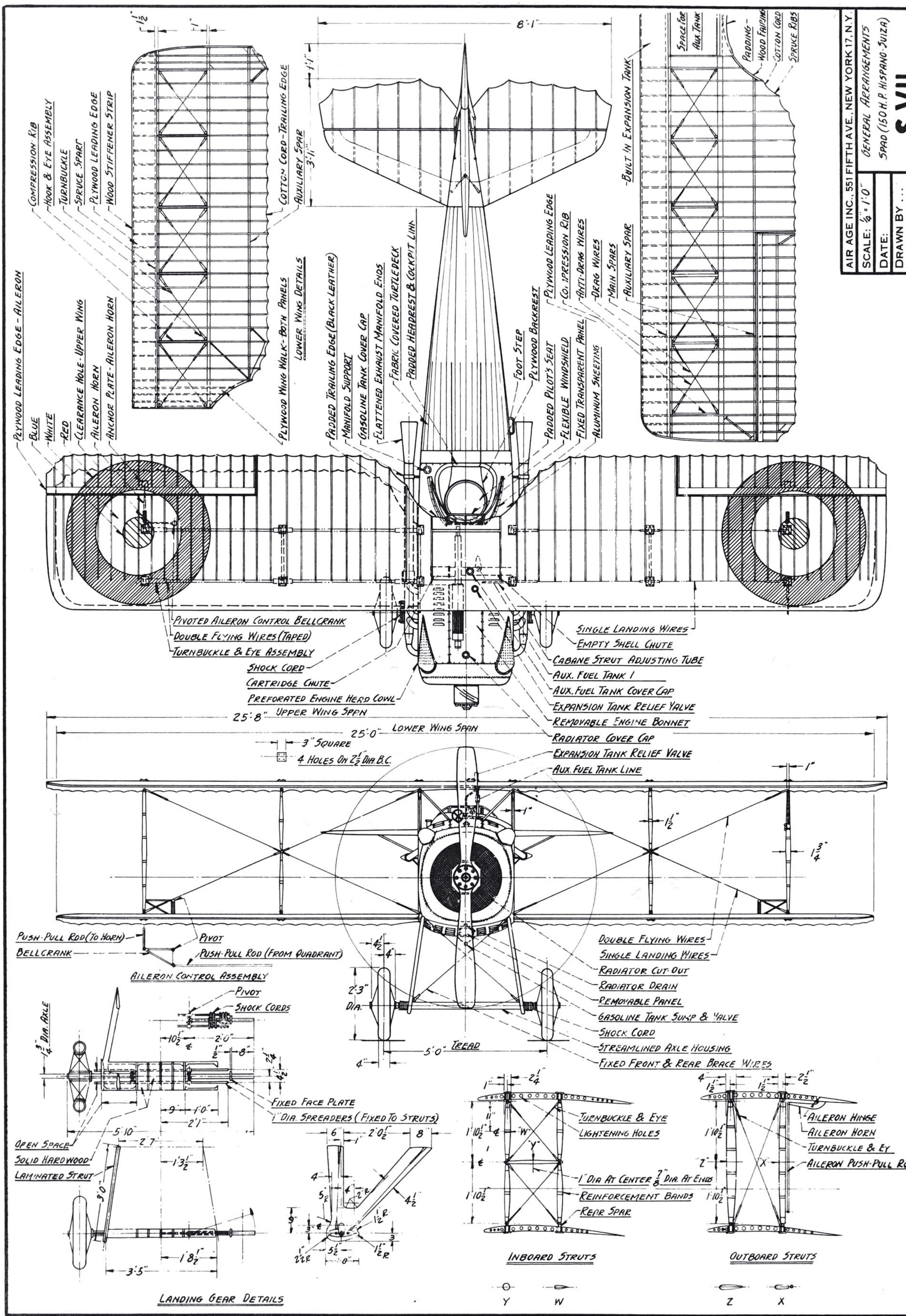

15 EQUAL SPACES 5:10½"
7 EQUAL SPACES
20 EQUAL SPACES 8:3"
REAR SPAR
FRONT SPAR
25:8" SPAN-UPPER
12:9"
4:3"
4:3"
1:4½"
1:3" TOP SURFACE OF UPPER LONGERONS
11:0½" SPAN-PANEL
25:0" SPAN-LOWER
CHORD
STAGGER
+2° INCIDENCE
+½° INCIDENCE
DIA.
COWL CUT-OUT
A
B
C
D
E
F
G
H
J
K
L
M
MAIN FUEL TANK
4 EQUAL SPACES
3 EQUAL SPACES
PARALLEL TO AIRPLANE & FROM "B" TO "E"
PARALLEL TO ℄ THRUST
STRAIGHT FROM "G" TO "M"

NOTES:

THERE ARE NO DIHEDRAL IN BOTH WING PANELS. UPPER WING IS OF ONE COMPLETE PANEL. TWO LOWER PANELS ARE BOLTED TO FUSELAGE.

PLANS ON HISPANO-SUIZA ENGINE WERE PUBLISHED IN JUNE 1945 ISSUE OF MODEL AIRPLANE NEWS.

PLANS ON VICKERS 30 CAL. MACHINE GUN WILL BE PUBLISHED IN FUTURE ISSUE OF MODEL AIRPLANE NEWS.

AIR AGE INC., 551 FIFTH AVE., NEW YORK 17, N.Y.	
SCALE: ½" = 1'0"	LAYOUT PLANS & DATA
DATE:	SPAD (150 H.P. HISPANO SUIZA)
DRAWN BY ... W. A. WYLAM	S.VII

Spad S.XIA-2

drawings by WILLIAM WYLAM

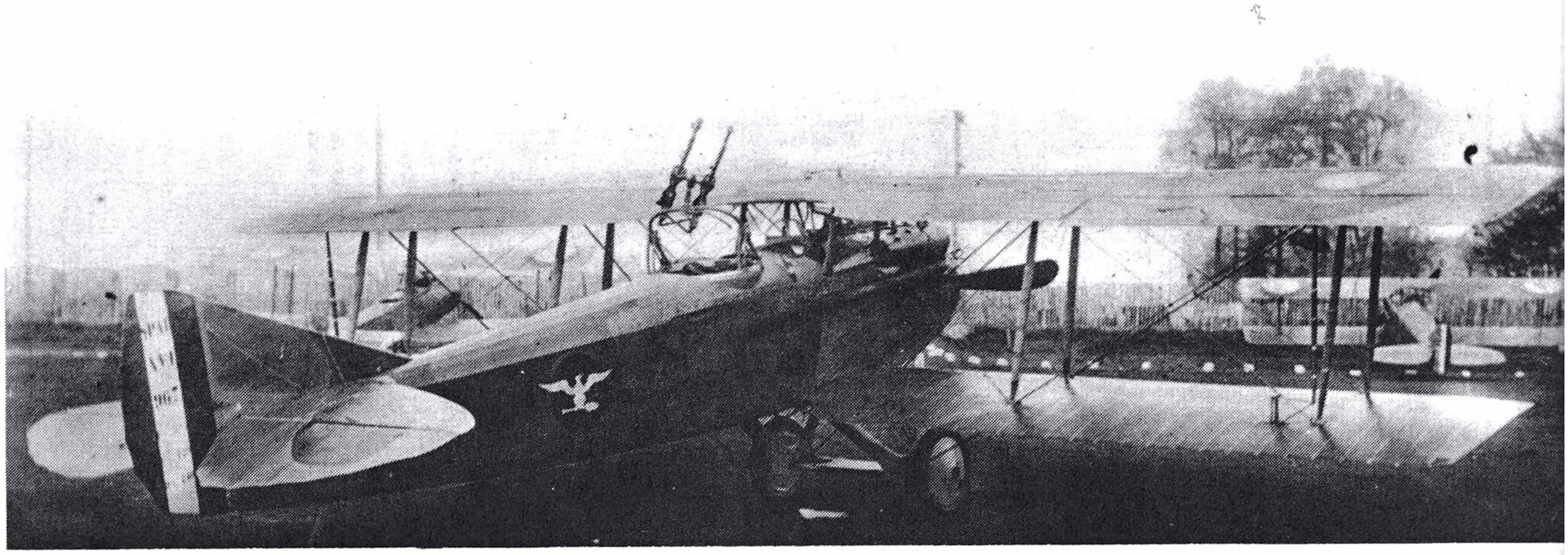

FOLLOWING the great success of the Spad S.VII, French engineers developed from it a two-place reconnaisance version that was to fill a number of operational requirements, such as observation and light bombing. Powered by a 235-hp Hispano-Suiza engine, it entered service from 1917 with French, Belgian, and eventually AEF squadrons. Because of the additional weight gained with the increased size of the fuselage and the addition of bombs, more armament, etc., performance suffered. It was no match for the German fighters and was an easy target, leading to a re-evaluation of its use.

The Hispano-Suiza engine was changed to a more powerful Lorraine-Dietrich type 8Bb which delivered 250 hp at only 1,650 rpm and redesignated as Spad XVIA-2, but retained the same construction and appearance of the type XI.

Because it had a proven airframe, the uses and adaptations were many. Although generally disliked by pilots because of its vulnerability, the Spad XI and XVI gave good results in action.

Billy Mitchell's S.XVIA-2 is on show at the National Air & Space Museum in Washington, DC. □

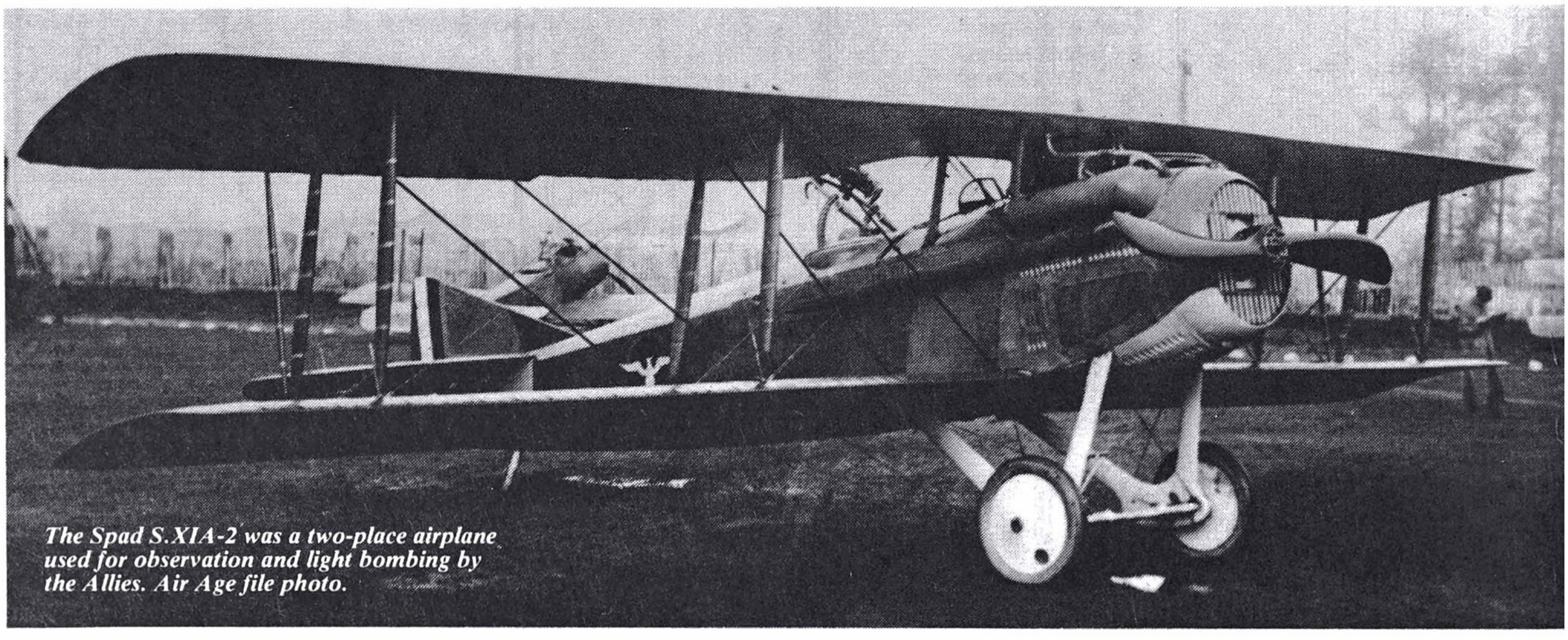

The Spad S.XIA-2 was a two-place airplane used for observation and light bombing by the Allies. Air Age file photo.

AIR AGE INC., 551 FIFTH AVE., NEW YORK 17, N.Y.

SCALE: 1/4" = 1'-0"

DATE:

DRAWN BY ... W.A.WYLAM

FUSELAGE DETAILS

FRENCH 2 SEAT S.P.A.D. FIGHTER

S-XIA-2

RADIATOR SHUTTERS
RADIATOR
ENGINE MOUNT
RUDDER BAR
TORQUE TUBE BEARINGS
REINFORCED SHELF (SHADED AREA)
AMMUNITION DRUMS RACK
ELEVATOR CONTROL HORN
PULLIES "A"
SINGLE RUDDER CONTROL CABLES
DOUBLE ELEVATOR CONTROL CABLES
TURNBUCKLE & EYE ASSEMBLY
RUDDER CONTROL HORN
ELEVATOR CONTROL HORN
PLYWOOD FAIRING PANEL
PLYWOOD FORMERS
FAIRING STRIPS
SHUTTER CONTROL CABLES
HINGE
AUX. FUEL TANK COVER CAP
RELIEF VALVE
AMMUNITION BOX
SHUTTER CONTROL
PET-COCK-FUEL LINE
LEATHER PAD
VICKERS CHARING HANDLE
LATE S-11's WINDSHIELD
THROTTLE LEVER
RUDDER CONTROL CABLES
HINGED COVER DOORS (RUDDER BAR)
REINFORCED INTRUMENT SHELF
PLYWOOD PANEL-BACK SUPPORT
LEWIS AMMUNITION RACK
STEEL TUBING
PLYWOOD PANEL
PIVOT POINT
STEEL SHOE
STEEL WIRE-T.E.
CASTED HORN
METAL STRIP
SHUTTER PIVOT RODS
STEEL SIDE PLATES
RUDDER CONTROL BAR
MAIN FUEL TANK
AILERON CRANK
FLOORBOARD
RUDDER CONTROL BAR
AERIAL WINCH
PULLIES "A"
ELEVATOR CONTROL HORN
ALTIMETER
GAS VALVES
PRESSURE GAUGE
PRESS'R. RELIEF
IGNITION
HEAD REST
CHARGING HANDLE
PLYWOOD BACK
FUEL STRAINER
AIR PUMP
SCARFF RING RAIL
AMMUNITION RACK
HINGED SEAT
CROSS PIECE RAIL
PLYWOOD PANEL
FLOOR BOARD
HEADER TANK
RADIATOR CUT-OUT
HINGED ACCESS DOOR
SHUTTER CONTROL
HINGED DOOR
THROTTLE
WATER TEMP'E
TACHOM'R.
PIVOT POINT
PUSH-PULL TUBE
MAIN FUEL TANK
AILERON CRANK
TANK SUPPORT BANDS
ELEVATOR PUSH-PULL TUBE
ELEVATOR CONTROL HORN
AILERON CRANK
TORQUE TUBE
PUSH-PULL TUBES
WIRE TRAILING EDGE
FALSE SPARS
RADIATOR MOUNT
STEEL CROSS PLATES
ENGINE MOUNT
RUDDER CONTROL
EMPTY SHELL CHUTE
PLYWOOD FORMERS
TURNBUCKLE ASSEMBLY
SHOCKCORD
STEEL TUBING
PIVOT ROD
TAILSKID
HORIZONTAL STABILIZER DETAILS
ELEVATOR CONTROL CABLES' SLOT
CONTROL HORN
ELEVATOR HINGE
AILERON CRANK
CAM
ELEVATOR CABLES
P = PIVOT POINT
EXHAUST MANIFOLD
PLYWOOD PANEL
PLYWOOD LEADING EDGE
EMPTY BELT BOX DOOR
AMMUNITION BOX DOOR
WATER LINE TO RAD. & ENGINE
CAM HOUSING COWL
PORT AILERON UP
NEUTRAL
STARBOARD AILERON UP
S-XVIA-2
S-11A-2's VERTICAL STABILIZER OUTLINE
SLIDING INSPECTION DOOR
METAL PANEL
SPAD
XVI
959
P.U. 255
P.C. 120
L.D. 240
BLUE
WHITE
RED
U.S.A.
TRAILING RADIO AERIAL (S-16 ONLY)
ACCESS DOOR-STARBOARD ONLY
8'-6" DIA.-COUNTER-CLOCKWISE
13°

THE "S-16" SPAD WAS CONSTRUCTED IN LARGE NUMBERS & IT WAS BUILT ON THE S-11'S AIRFRAME; MINOR CHANGES ON ENGINE MOUNT, ENGINE COWLINGS, COCKPIT COWLINGS, AND TURTLEDECK. THE HORIZONTAL STABILIZER WAS THE SAME AS THE S-11'S; THE VERTICAL STABILIZER WAS INCREASED IN AREA AS SHOWN. THE S-11'S WINGS WERE USED WITH NO CHANGES EXCEPT FOR WING GAP (DECREASED). THE S-16'S POWERPLANT WAS LORRAINE-DIETRICH "8Bb" OF 250 H.P. @ 2150 R.P.M.; IT ALSO USED THE L:D. "8Fb" OF 236 H.P. @ 1650 R.P.M. THE ABOVE "S-16A-2" WAS USED BY GENERAL WILLIAM "BILLY" MITCHELL AND IS NOW ON DISPLAY AT THE SMITHSONIAN INSTITUTE IN WASHINGTON, D.C.

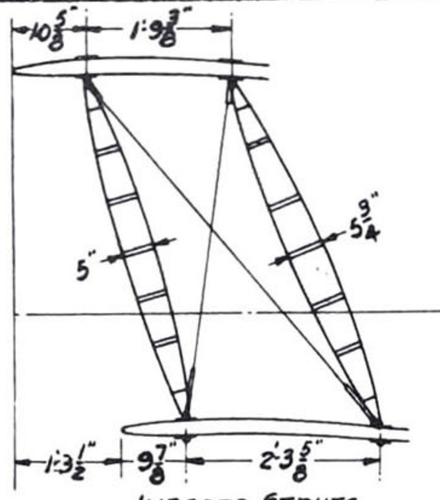

INBOARD STRUTS

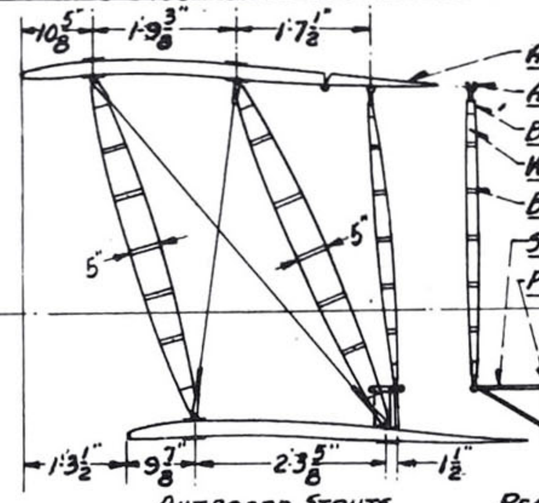

OUTBOARD STRUTS

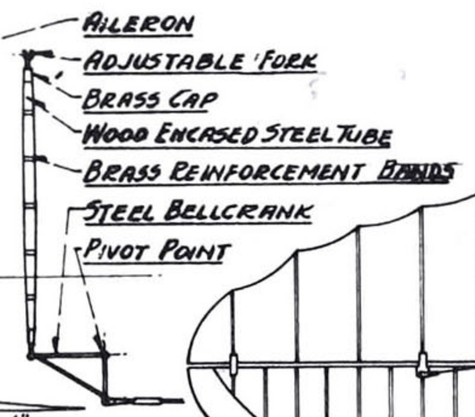

REAR VIEW AILERON STRUT

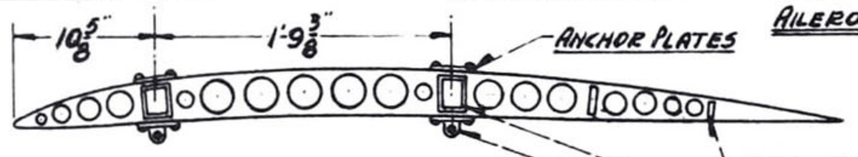

UPPER WING'S RIB CONSTRUCTION

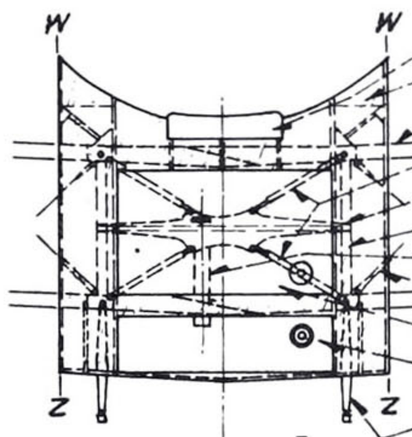

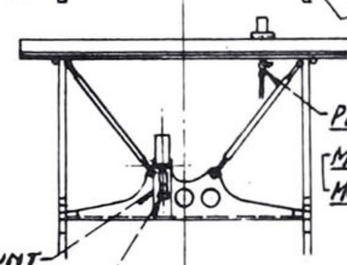

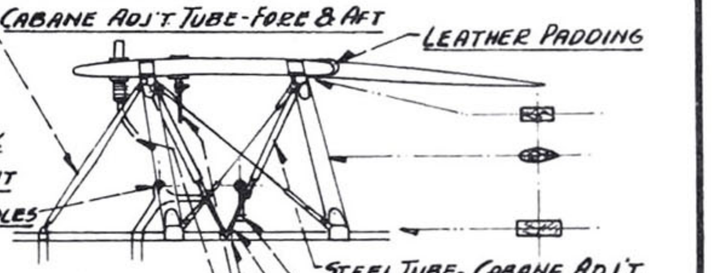

UPPER WING DETAILS

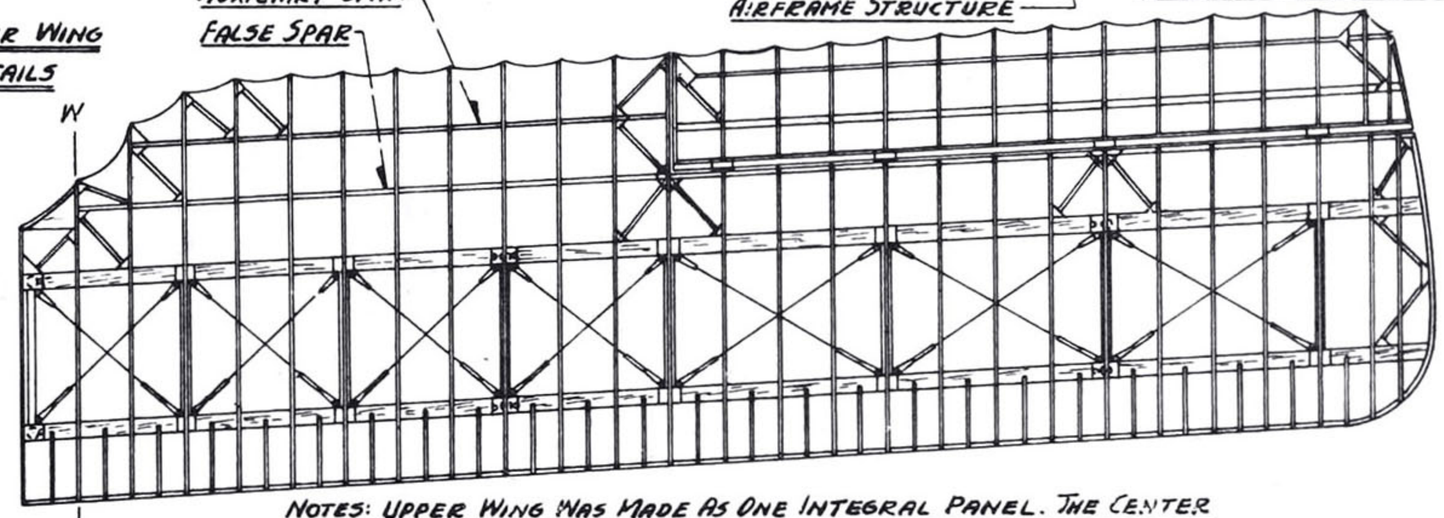

NOTES: UPPER WING WAS MADE AS ONE INTEGRAL PANEL. THE CENTER SECTION (W-Z TO W-Z) WAS PLYWOOD COVERED; THE OUTER SECTIONS WERE FABRIC COVERED. BOTH "S-11A-2" & "S-16A-2" USED SOME WINGS (S-16A-2 HAD DECREASED GAP).

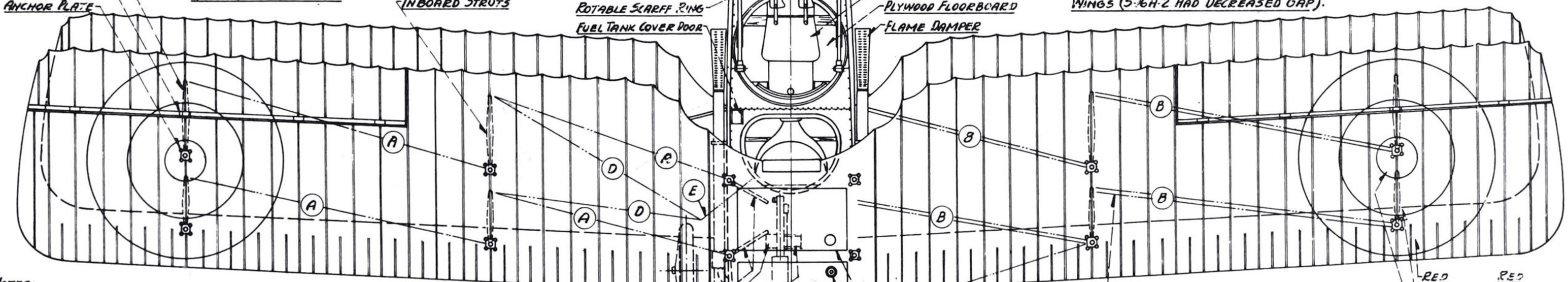

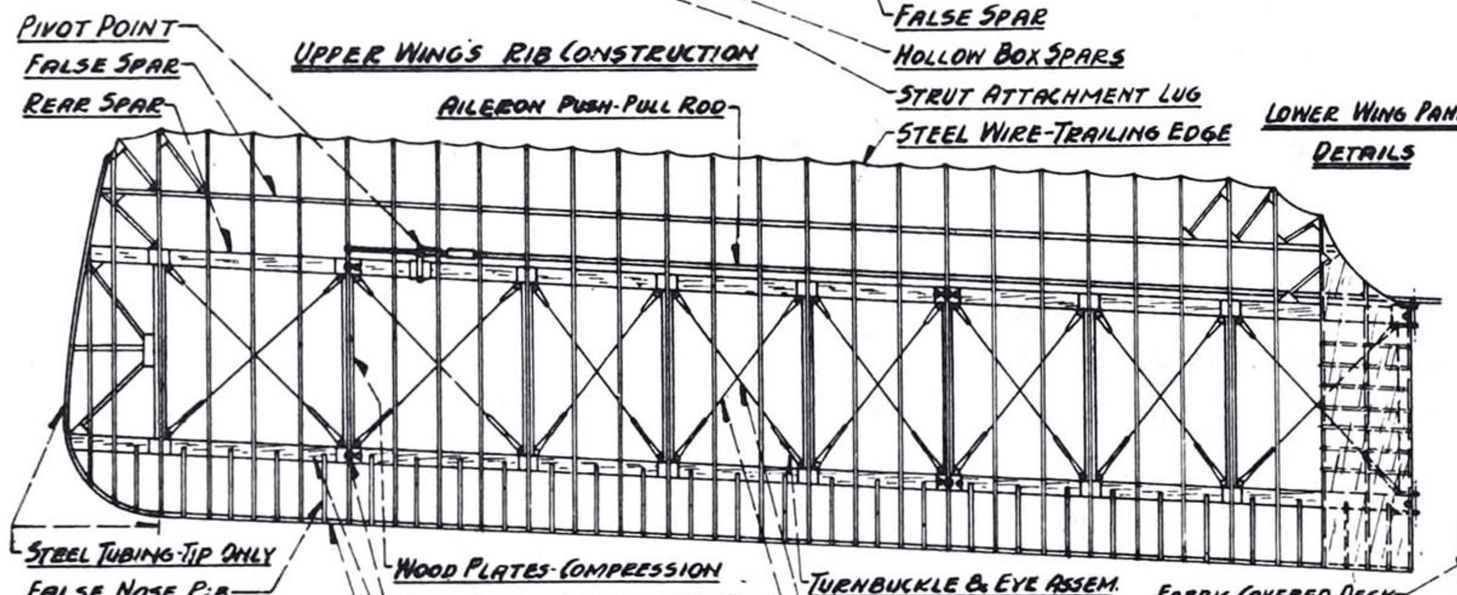

LOWER WING PANEL DETAILS

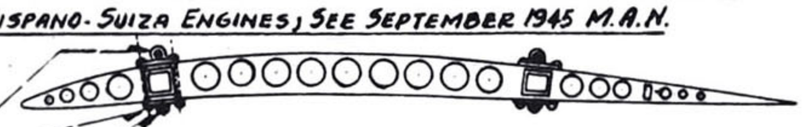

LOWER WING'S RIB CONSTRUCTION
SCALE: 1/2 = 1'-0"

DOUBLE FLYING WIRES-WOOD STRIP BETWEEN WIRES & TAPED

RED	RED
WHITE	BLUE
COBALT BLUE	WHITE
FRENCH	U.S.A.

NOTES:
FOR DETAILS ON LEWIS GUN, SEE AUGUST 1946 M.A.N.; FOR DETAILS ON VICKERS GUN, SEE APRIL 1946 M.A.N.; FOR DETAILS ON SCARFF RING, SEE FEBRUARY 1946 M.A.N.; AND FOR DETAILS ON HISPANO-SUIZA ENGINES, SEE SEPTEMBER 1945 M.A.N.

NOTES:
SPAD S-11A-2 USED THE 200 H.P. HISPANO-SUIZA "8Bc" WHICH WAS THE FRENCH DESIGNATION OF THE AMERICAN MODEL "D". IT WAS ALSO RATED 235 H.P. @ 1600 R.P.M.

AIR AGE INC., 551 FIFTH AVE., NEW YORK 17, N.Y.	
SCALE: 1/4" = 1'-0"	GENERAL ARRANGEMENTS
DATE:	FRENCH 2 SEAT SPAD FIGHTER
DRAWN BY ... W.A.WYLAM	S-XIA-2

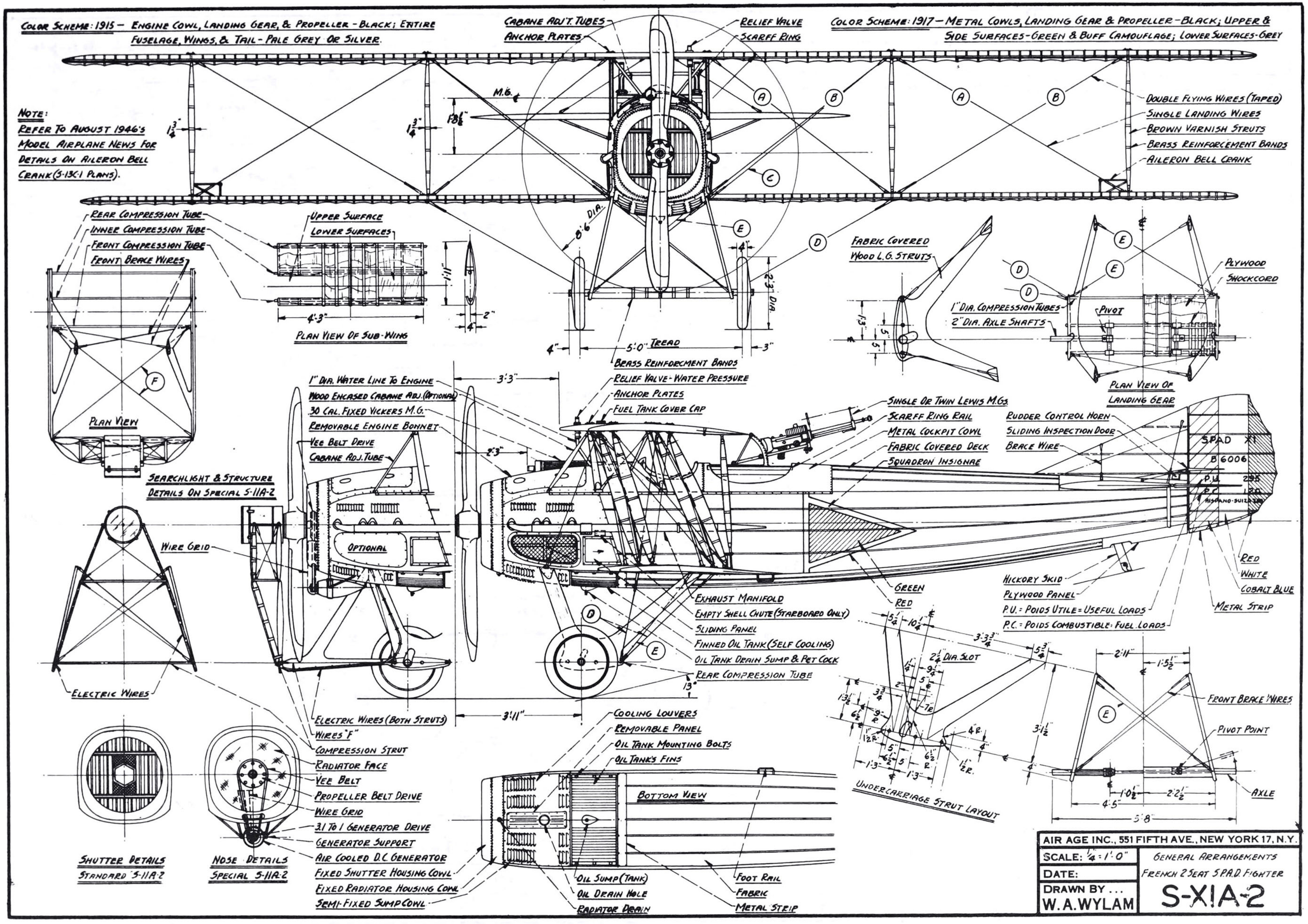
COLOR SCHEME: 1915 – ENGINE COWL, LANDING GEAR, & PROPELLER – BLACK; ENTIRE FUSELAGE, WINGS, & TAIL – PALE GREY OR SILVER.
COLOR SCHEME: 1917 – METAL COWLS, LANDING GEAR & PROPELLER – BLACK; UPPER & SIDE SURFACES – GREEN & BUFF CAMOUFLAGE; LOWER SURFACES – GREY
NOTE: REFER TO AUGUST 1946'S MODEL AIRPLANE NEWS FOR DETAILS ON AILERON BELL CRANK (S-13C-1 PLANS).
CABANE ADJ'T. TUBES
ANCHOR PLATES
RELIEF VALVE
SCARFF RING
DOUBLE FLYING WIRES (TAPED)
SINGLE LANDING WIRES
BROWN VARNISH STRUTS
BRASS REINFORCEMENT BANDS
AILERON BELL CRANK
M.G.
8'6" DIA.
2'3" DIA.
5'0" TREAD
BRASS REINFORCEMENT BANDS
REAR COMPRESSION TUBE
INNER COMPRESSION TUBE
FRONT COMPRESSION TUBE
FRONT BRACE WIRES
UPPER SURFACE
LOWER SURFACES
PLAN VIEW OF SUB-WING
PLAN VIEW
FABRIC COVERED WOOD L.G. STRUTS
1" DIA. COMPRESSION TUBES
2" DIA. AXLE SHAFTS
PIVOT
PLYWOOD
SHOCKCORD
PLAN VIEW OF LANDING GEAR
1" DIA. WATER LINE TO ENGINE
WOOD ENCASED CABANE ADJ. (OPTIONAL)
30 CAL. FIXED VICKERS M.G.
REMOVABLE ENGINE BONNET
VEE BELT DRIVE
CABANE ADJ. TUBE
RELIEF VALVE - WATER PRESSURE
ANCHOR PLATES
FUEL TANK COVER CAP
SINGLE OR TWIN LEWIS M.GS.
SCARFF RING RAIL
METAL COCKPIT COWL
FABRIC COVERED DECK
SQUADRON INSIGNAE
RUDDER CONTROL HORN
SLIDING INSPECTION DOOR
BRACE WIRE
SPAD XI
B 6006
P.U. 295
P.C. 120
HISPANO-SUIZA
SEARCHLIGHT & STRUCTURE DETAILS ON SPECIAL S-11A-2
WIRE GRID
OPTIONAL
ELECTRIC WIRES
ELECTRIC WIRES (BOTH STRUTS)
WIRES "F"
COMPRESSION STRUT
RADIATOR FACE
VEE BELT
PROPELLER BELT DRIVE
WIRE GRID
3:1 TO 1 GENERATOR DRIVE
GENERATOR SUPPORT
AIR COOLED D.C. GENERATOR
FIXED SHUTTER HOUSING COWL
FIXED RADIATOR HOUSING COWL
SEMI-FIXED SUMP COWL
EXHAUST MANIFOLD
EMPTY SHELL CHUTE (STARBOARD ONLY)
SLIDING PANEL
FINNED OIL TANK (SELF COOLING)
OIL TANK DRAIN SUMP & PET COCK
REAR COMPRESSION TUBE
GREEN
RED
HICKORY SKID
PLYWOOD PANEL
P.U. = POIDS UTILE = USEFUL LOADS
P.C. = POIDS COMBUSTIBLE = FUEL LOADS
RED
WHITE
COBALT BLUE
METAL STRIP
2¼" DIA. SLOT
UNDERCARRIAGE STRUT LAYOUT
FRONT BRACE WIRES
PIVOT POINT
AXLE
SHUTTER DETAILS STANDARD S-11A-2
NOSE DETAILS SPECIAL S-11A-2
COOLING LOUVERS
REMOVABLE PANEL
OIL TANK MOUNTING BOLTS
OIL TANK'S FINS
BOTTOM VIEW
OIL SUMP (TANK)
OIL DRAIN HOLE
RADIATOR DRAIN
FOOT RAIL
FABRIC
METAL STRIP
AIR AGE INC., 551 FIFTH AVE., NEW YORK 17, N.Y.
SCALE: ¼" = 1'-0"
DATE:
DRAWN BY ... W. A. WYLAM
GENERAL ARRANGEMENTS
FRENCH 2 SEAT S.P.A.D. FIGHTER
S-XIA-2

	S-XI(A-2	S-XVI(A-2
A	2'-9"	2'-7½"
B	1'-5½"	1'-5½"

NOTES: THE S-XI & S-XVI BOTH USED THE SAME WINGS; THE GAP ON S-XVI WAS DECREASED 1½". THE FORE & AFT CABANE ADJUSTMENT TUBES WERE REMOVED ON S-XVI.

10 20 30 40 50 60 70 80 90 100

AIRFOIL SECTION FOR LOWER WING

AIRFOIL SECTION FOR UPPER WING

NOTES: CROSS-SECTIONS ON LEFT HALF ARE THOSE OF THE S-XI'S ONLY

NOTES: SPAR 11 & 16 ARE SAME FUSELAGE WITH MINOR CHANGES ON NOSE & TAILSKID. THE VERTICAL STABILIZER WAS INCREASED IN AREA AS SHOWN ABOVE (ON S-16). SLIGHT CHANGES WERE MADE ON THE HORIZONTAL STABILIZER.

AIR AGE INC., 551 FIFTH AVE., NEW YORK 17, N.Y.	
SCALE: ½" = 1'-0"	GENERAL LAYOUT DATA
DATE:	FRENCH 2 SEAT S.P.R.D. FIGHTER
DRAWN BY ... W. A. WYLAM	S-XIA-2

Spad S.XIII C.1

drawings by WILLIAM WYLAM

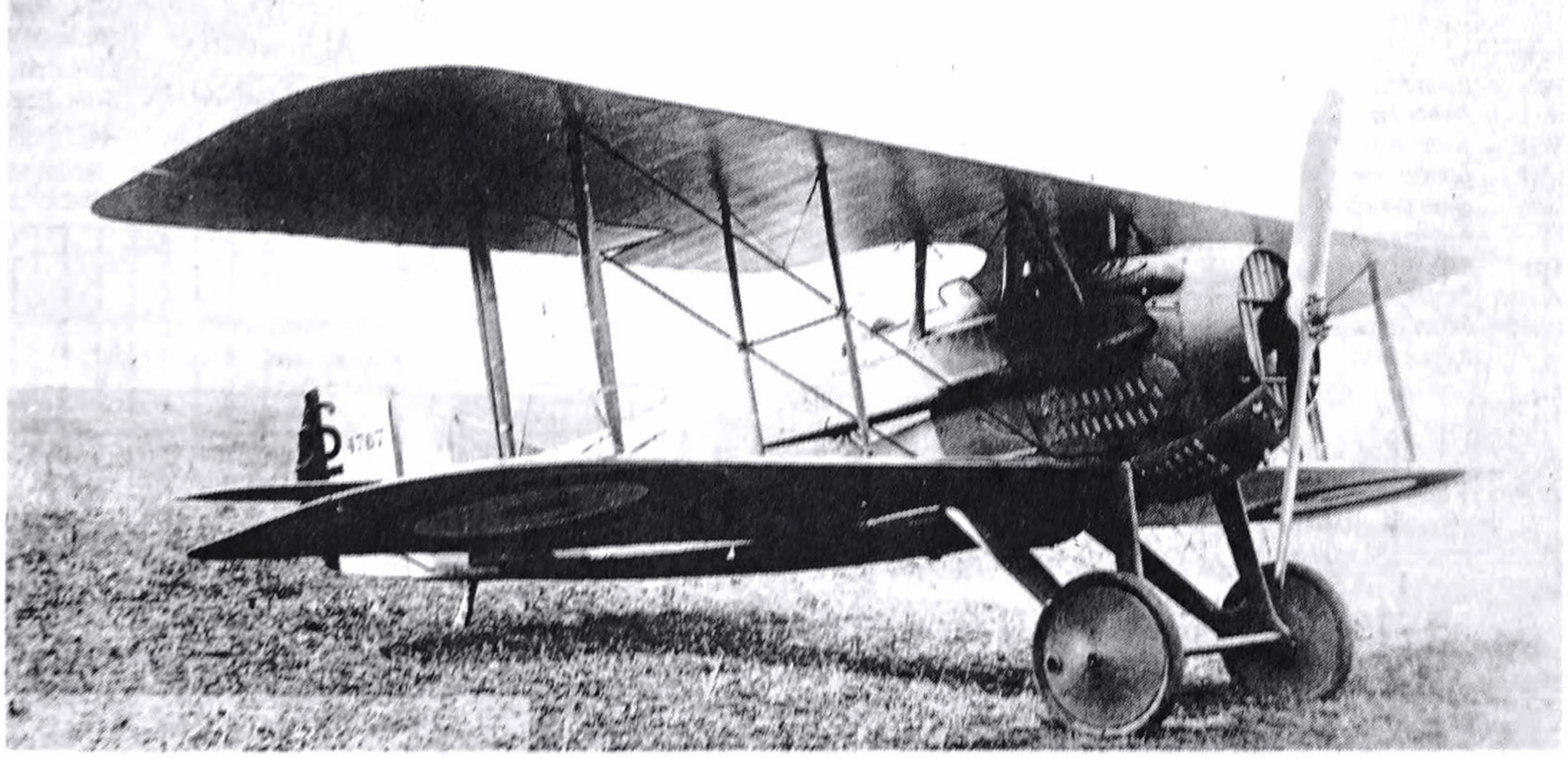

MORE NOTED for its speed and strength than for its maneuverability or climb, the Spad XIII was a definite favorite because of one other very important characteristic—it was easy to fly. The Spad XIII was one of the best-liked Allied aircraft to see service in 1917-1918.

Like all other good fighting ships, it was a compromise between climb, speed, maneuverability, ease of construction, and maintenance. But the airplane proved itself over and over again where it counted—in the air and in battle. The first French squadron to be completely equipped with the new XIII was the Escadrille S.3 "Les Cigognes" (The Storks) of which the great French Ace Georges Guynemer was top ranking member. Killed in the XIII under mysterious circumstances, Guynemer never achieved a victory in the plane and an omen of bad luck was to prevail, although no basis in fact was ever established to substantiate it. In fact, the war records of the Spad XIII speak well for themselves.

The original models were powered by Hispano-Suiza type 8Ba eight-cylinder V-type engines which at first delivered 200 hp and were soon improved to 220 hp at sea level. Among the most streamlined of WW I airplanes, it had a top speed of 134.5 mph. It could climb to 6,500 feet in 5 minutes 17 seconds and could reach a ceiling of slightly over 22,000 feet.

Six XIII C.1's still survive, one of them Guynemer's in Paris, another Ray Brooks' in Washington D.C. □



Considered easy to fly, the Spad S.XIII C.1 was a favorite mount for Allied pilots. It was a fighter that could take a hard punch and still remain air-worthy. Air Age file photos.

S-XIII C.1

AIR AGE INC., 551 FIFTH AVE., NEW YORK 17, N.Y.

SCALE: 1" = 1'0"

DATE:

DRAWN BY ... W. A. WYLAM

FUSELAGE & WING DETAILS
FRENCH "S.P.A.D." FIGHTER

SPAD STYLE SHUTTER ASSEMBLY
(ON ALL SPAD SHUTTERS)

Shutter Actuating Rods
Shutter Pivot Rod Mounts

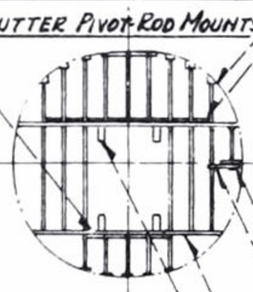

Mounting Bracket
Shutter Support Channel
M.G.s. Support Channel
Vickers M.G.s
Oil Tank

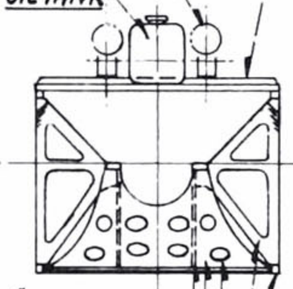

1/4" Plywood Panels
1/4" Plywood Web
Water Line Openings
Stamped Steel Web
Fuselage Longeron
Cowl Cut-Out
Radiator Outline
11/2" Rightening Flange
Pressed Nose
Radiator

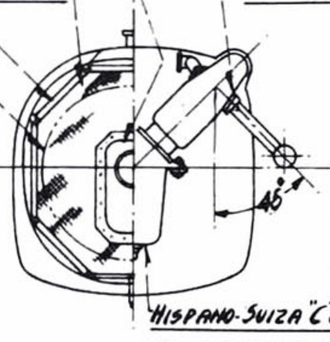

Hispano-Suiza "C" & "E"
Conn. From Engine

A & B

Pullies B' & B"
Pulley "A"
Endless Cable
Engine Mount
Header Tank
Pulley "A"
Pressed Nose
Support Bracket
Radiator Drain
Water Line To Pump
Oil Cooler
L.G.s. Guy Wire
Pressed Recess
Fire Wall Cut-Out
Plywood Shelf

B

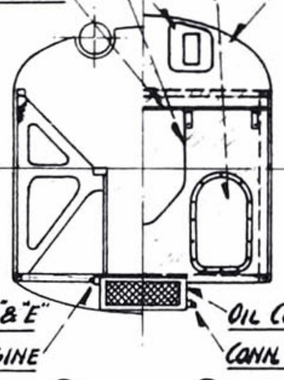

Oil Cooler
Conn. To Oil Pump

C

Support Pylon
Fuel Line (To Tank)
Fuel Line Meter
Empty Shell Chute
Ammunition Box

D

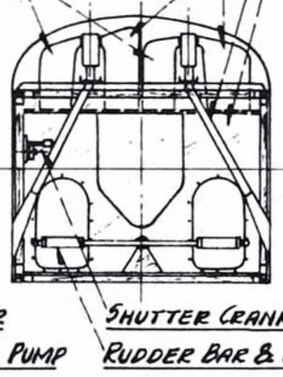

Shutter Crank
Rudder Bar & Pylon

D

Shutter Actuating Rod
Radiator Outline
Engine Mount

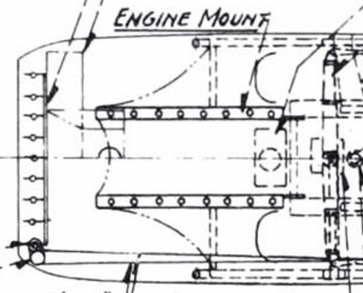

Oil Tank
Rudder Bar
Empty Shell Chute

Instruments
Shutter Crank
M.G.s. Charging Handle
Engine Controls
Map Case

Fuel Tank Cover Cap
Camera
Safety Belt
Pulley "C"

Shutter Crank
Fuel Line
Rudder Bar

Plywood Shelf
Support Bands
Camera
Pulley "C"

Firewall
Floorboard
Firewall
Empty Belt Case
Ammunition Box

Empty Shell Chute
Firewall
Fixed Windshield
Instruments

E

Rudder Control Horn
Elevator Front Spar
Elevator Control Horn
Double Elevator Cables

Wire & Eyes - Rudder Hinge
Vert. Stab. Guy Wire Post
Rudder Control Cable
Plywood Fairing Panel

Double Elevator Control Cables
Rudder Control Cable

Turnbuckle Assembly
Fairing Strips
Piano Wire
Metal Fittings
Plywood Formers

Port Gun Charging Handle
Starboard Charging Handle (Reversed)
Peep & Ring Gun Sights
Map Case & Spring Map Holder
Seat Hinge
Fuel Line

Instrument Shelf
Engine Controls

F

Fuel Strainer
Seat Cushion
Steel Wire-Trailing Edge

Padded Headrest
Plywood Back
Safety Belt

Pullies "C"
Camera

G

Elevator Control Horn & Bearing

H J

Stiffener Strips
Rear Spar
Front Spar

Shockcord
Pivot Point
Elevator Horn

Rudder Control Horn
Elevator Control Horn
Pullies "D"

Steel Wire
Stiffener Strips
Rear Spar
Metal Strip
Plywood Panel

Steel Shoe
Hickory Skid
Trailskid Pivot Point
Trailskid Shock Cord
Pullies "D"

A

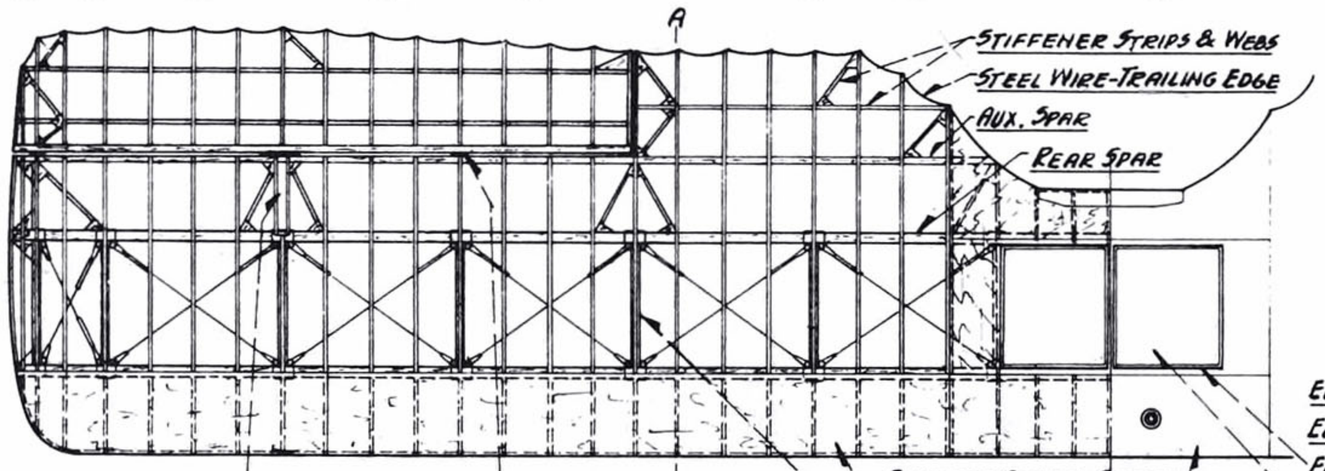

Stiffener Strips & Webs
Steel Wire-Trailing Edge
Aux. Spar
Rear Spar

Reinforced Frame
Aileron Hinge

A

Plywood Center Section
Plywood Leading Edge
Compression Rib
Stiffener Strip
Aux. Spar
Plywood Wing Walk
Aileron Push-Pull Rod
Push-Pull Crank

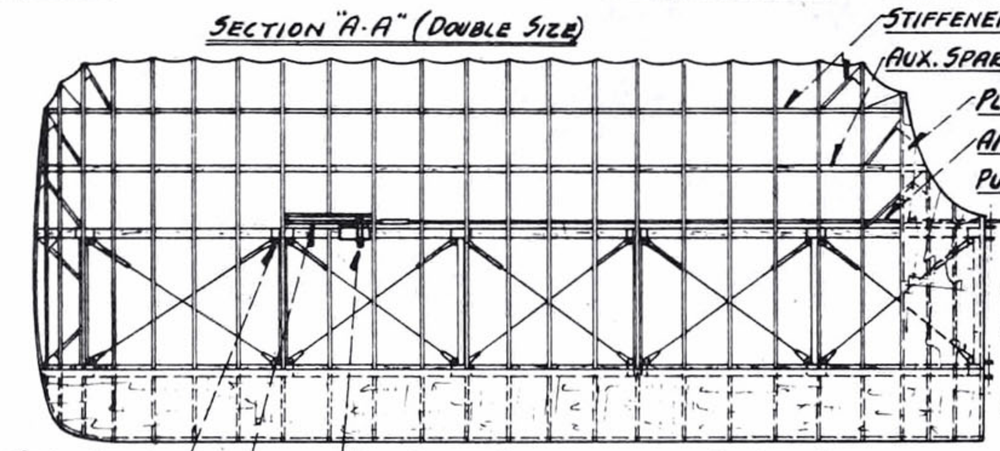

Section "A-A" (Double Size)

Pivot Point
Gun Control

Metal Fittings
Aileron Bell Crank

Bell Crank Support
Aileron Push-Pull Rod
Pivot Point

Control Column
Crank Attachmt. Fittings
Push-Pull Rod Adj't. Tube



M.G.s. Safety Lock
Firing Controls
Firing Control Cables

Aileron In Up Position

Details Of Machine Guns' Firing Controls

Aileron In Neutral Position

Aileron Bell Crank
Push-Pull Rod Adj't. Tube

Aileron In Down Position

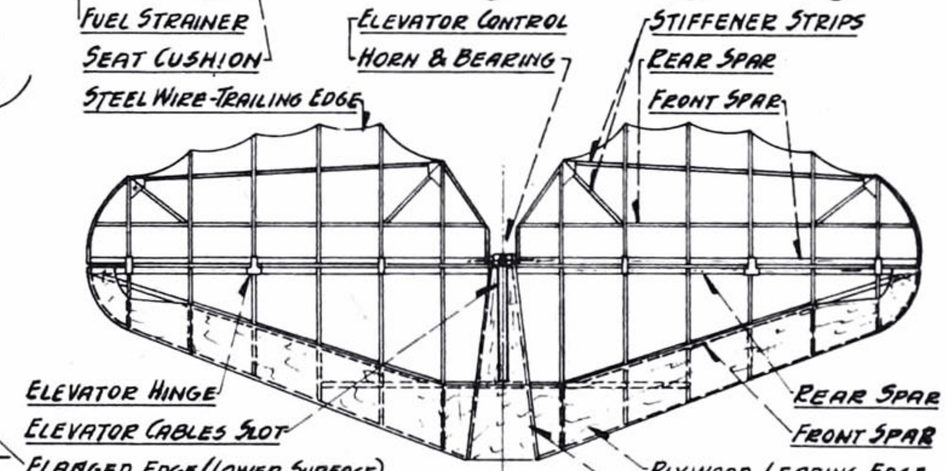

Elevator Hinge
Elevator Cables Slot
Flanged Edge (Lower Surface)
Fuel Tank Compartments

Rear Spar
Front Spar
Plywood Leading Edge
Plywood Center Section

Horizontal Stabilizer Details

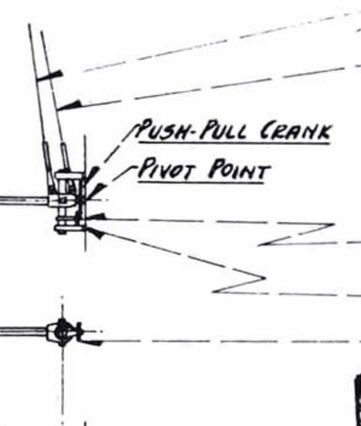

Push-Pull Crank
Pivot Point

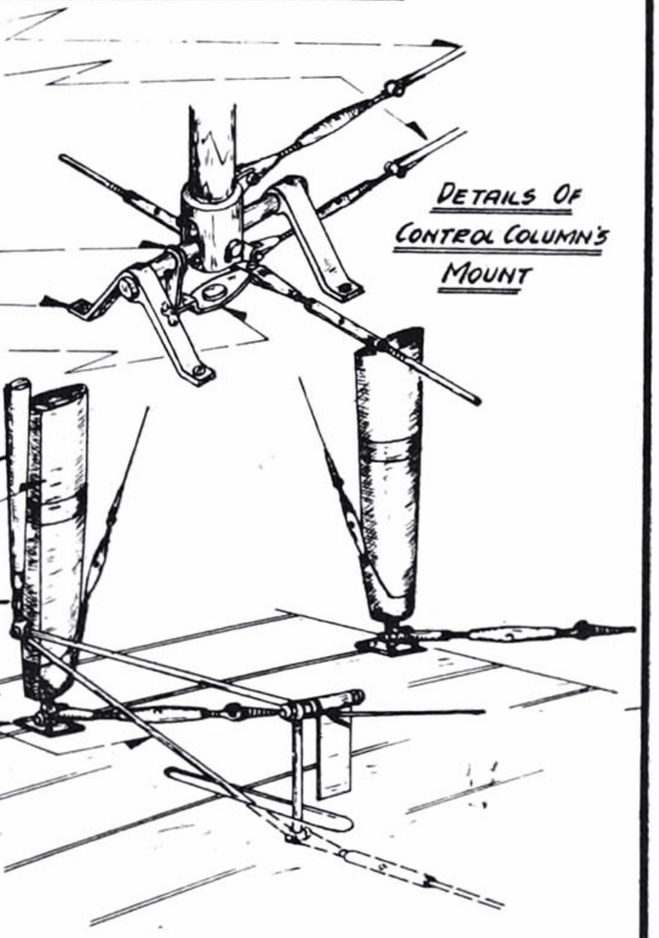

Details Of Control Column's Mount

Aileron Push-Pull Strut
Rear Outboard Strut
Push-Pull Strut's Adj't. Screw
Aileron Bell Crank
Main Spar

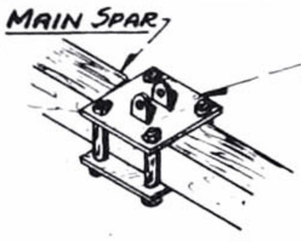

Details Of Strut's Anchor Plates

Details Of Outboard Wing Struts & Aileron Bell-Crank

AIR AGE INC., 551 FIFTH AVE., NEW YORK 17, N.Y.
SCALE: ¼" = 1'-0"
DATE:
DRAWN BY ... W.A.WYLAM

GENERAL ARRANGEMENTS
FRENCH "S.P.A.D." FIGHTER

S-XIII C.1

LEADING EDGE-PROPELLER HUB
COWL CUT-OUT-MACHINE GUN TROUGH
FIXED .30 CAL. MARLIN MACHINE GUNS
WING MOUNT'G. LUGS
3'-2 3/4"
1'-2"
7"
REMOVABLE ACCESS PANEL
SEMI-FIXED COWLS
FIXED WINDSHIELD
LEATHER PADDING
PLYWOOD PANEL
PLAN VIEW-RES. FUEL TANK
RESERVE FUEL TANK
(OPTIONAL INSTALL'N.)
FRONT VIEW-RES. TANK
AIRPLANE
6"
10½"
3"
1'-8"
1'-7½"
1:1
10"
M.G.
METAL
METAL
FABRIC
METAL
2"
PHOTO
SHUTTER VANES
SHUTTER PIVOT RODS
RADIATOR OUTLINE
SCREEN (OPTIONAL)
MINOR CHANGES FOR LATE S.13 MODELS
OPTIONAL MANIFOLD
SLIDING ACCESS PANEL
FIXED EMPTY SHELL CHUTE
WING MOUNTING LUGS

DURAL CASTED RUDDER HORN
VERTICAL STABILIZER BRACE WIRE
ELEVATOR HINGE
FABRIC COVER
PLYWOOD PANEL
CAMERA APERTURE
FABRK COVER
TAIL LIFT HANDLE
OPTIONAL MANIFOLD
MANIFOLD COUPLING
FAIRED HEADREST
ENGINE MANIFOLD
UPPER WING LEADING EDGE
FOOT STEP
FLAME DAMPERS
FIXED RADIATOR COWL
FUEL TANK COVER CAP
HINGED SEAT
SEAT CUSHION
STEP PLATE

MODEL "C" (200 H.P.) & MODEL "E" (220 H.P.) HISPANO-SUIZA ENGINES WERE ON S.13s. ALL S.13s AND LATE S.7s HAD OIL COOLERS.
2" DIA.
2'9½"
3½"
2'2½"
3" DIA.
7"
1'-10"
BOTTOM VIEW
TANK SUPPORT BAND
TANK SUMP
MAIN FUEL TANK
COOLING AIR OUTLET-OIL COOLER-ON LATE S.7s & ALL S.13s
OIL SUMP PLUG ACCESS
SEMI-FIXED COWL
REMOVABLE PANEL
DRAIN PLUG-RADIATOR

RED — RED
BLUE — WHITE
WHITE — COBALT BLUE
U.S.A. — FRENCH
LATE S-13 LOWER WING PANEL DESIGN — NO CHANGES ON UPPER WING.

FUEL TANK SUMP
REMOVABLE COWL
FIXED .30 CAL VICKERS M.G.s
COOLING AIR OUTLETS ¼" DIA.
MACHINE GUN TROUGH
RING GUN SIGHT & MOUNT
RADIATOR COVER CAP
FUEL TANK SUMP
PET COCK-FUEL LINE
7" 7"
SIGHT
4½"
M.G.
1'-3"

ANCHOR PLATES
PORT SIDE WING FUEL TANK
COOLING AIR OUTLETS (VICKERS ONLY)
FUEL TANK COVER CAP
FUEL LINE-⅜" TUBING
RELIEF VALVE-EXPANSION TANK
WATER LINE TO PUMP-1" TUBING
FIXED WINDSHIELD
FIXED C.F.M. HOUSING COWL

AILERON CRANK & OPENING
PIVOTED BELL CRANK
BELL CRANK SUPPORT
SINGLE LANDING WIRES
RIGID INBOARD STRUTS
BINDED BRACE WIRE END LOOPS
TURNBUCKLE ASSEMBLY
BRASS REINFORCEMENT BANDS
ANCHOR PLATES

SHUTTER VANES
SHUTTER PIVOT RODS
OPEN SPACE
VERTICAL STAB. BRACE WIRE
SLIDING INSPECTION DOOR
RUDDER CONTROL HORN
BLUE
WHITE
RED
PIVOT POINT
BELL CRANK
TURNBUCKLE

FIXED .30 CAL. VICKERS M.G.s
RING GUN SIGHT
RADIATOR COVER CAP
2'-10½"
1'-11" M.G.
1'-8¾"
8'-1" PROPELLER DIA.
8'-0"
1'-1"
3'-3½"
AIR INLETS
RELIEF VALVE
FUEL TANK COVER CAP
FUEL TANK SUMP
PEEP SIGHT
ANCHOR PLATES
AILERON CRANK
4½"
2'-3" DIA.
5'-0" TREAD
4"
BLUE NO. WITH WHITE TRIM (U.S.A.)
MAYER III
15
PHOTO
METAL
S 18869
SPA XIII 200 Suiza
S XIII 77
TYPE NUMBER
SQUADRON NO.
ENGINE H.P.
PAYLOAD DATA
ENGINE NAME
RED
WHITE
COBALT BLUE
LATE AMERICAN RUDDER
FRENCH AND EARLY AMERICAN RUDDER MARKINGS-FRENCH RUDDER COLOR BARS SHOWN-ALL LETTERINGS BLACK.
LAMINATED WOOD-RADIATOR DRAIN PLUG REMOVABLE PANEL
BRASS SPEC. PLATE
SLIDING PANEL
MANIFOLD COUPLING
EMPTY SHELL CHUTE
FUEL TANK SUMP
FOOT STEP
BRASS SPECIF. PLATE
FUEL TANK COVER CAP
STEP PLATE
ACCESS PANEL (PORT ONLY)
DRAIN PLUG (AIR HOSE CONN.)
TAIL LIFT ACCESS PANEL (PORT ONLY)
HICKORY TAILSKID
FIXED PLYWOOD PANEL
HORIZONTAL STAB BRACE
METAL STRIP
135TH SQUADRON (U.S.A.)
15°

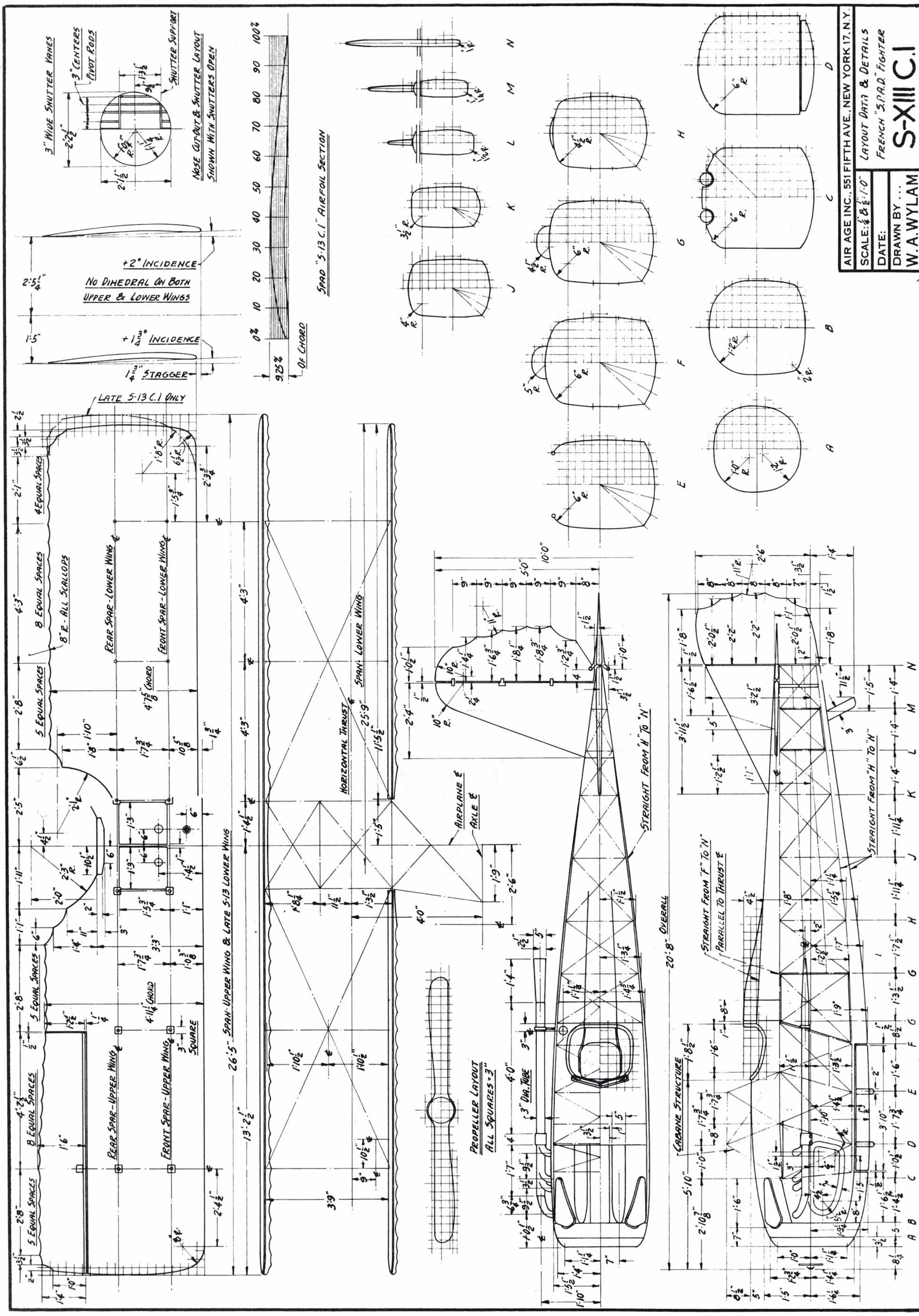
AIR AGE INC., 551 FIFTH AVE., NEW YORK 17, N.Y.
SCALE: 1/4" & 1/2" = 1'-0"
DATE:
DRAWN BY ... W.A. WYLAM
LAYOUT DATA & DETAILS
FRENCH "S.P.A.D." FIGHTER
S-XIII C.1
3" WIDE SHUTTER VANES
3" CENTERS PIVOT RODS
SHUTTER SUPPORT
NOSE CUT-OUT & SHUTTER LAYOUT SHOWN WITH SHUTTERS OPEN
SPAD "S-13 C.1" AIRFOIL SECTION
+2° INCIDENCE
NO DIHEDRAL ON BOTH UPPER & LOWER WINGS
+1 3/4° INCIDENCE
1 3/4" STAGGER
LATE S-13 C.1 ONLY
8 EQUAL SPACES
5 EQUAL SPACES
4 EQUAL SPACES
8" R. - ALL SCALLOPS
REAR SPAR - LOWER WING
FRONT SPAR - LOWER WING
REAR SPAR - UPPER WING
FRONT SPAR - UPPER WING
SPAN - UPPER WING & LATE S-13 LOWER WING
SPAN - LOWER WING
HORIZONTAL THRUST
AIRPLANE ℄
AXLE ℄
STRAIGHT FROM "H" TO "N"
STRAIGHT FROM "F" TO "N"
PARALLEL TO THRUST ℄
CABANE STRUCTURE
PROPELLER LAYOUT ALL SQUARES = 3"
3" DIA. TUBE
OVERALL

Standard Model J

drawings by WILLIS NYE

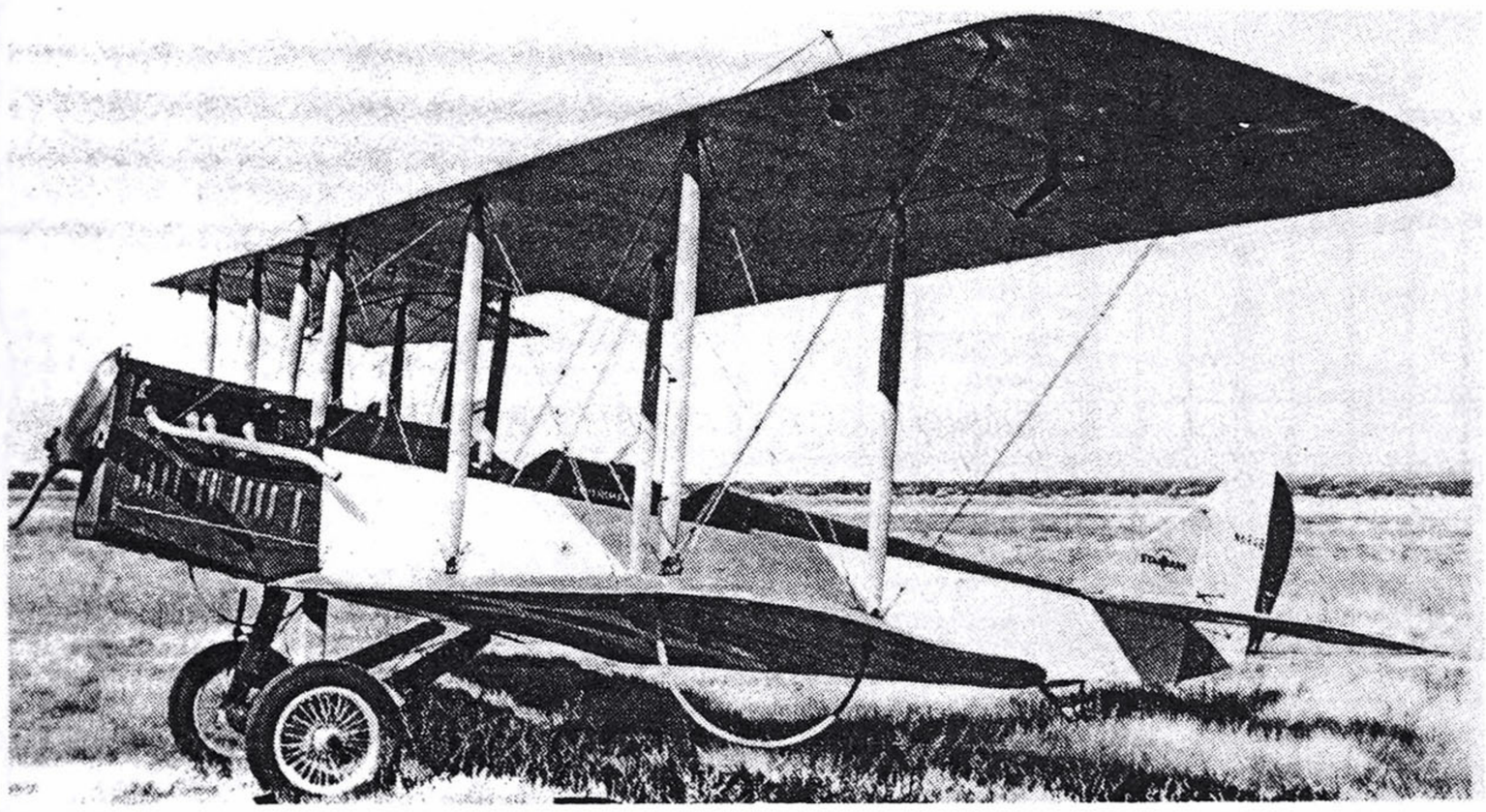

DEVELOPED from the Standard H series biplanes designed in 1916, the J series aircraft were part of the USA's effort to produce machines as trainers for the war in Europe. A tandem two-seater, it was initially powered by the Hall-Scott 100-hp A-7A engine. It proved to be somewhat underpowered and so the J-1 was introduced, powered by a 175-hp engine, also from Hall-Scott. The H-S A-5A engine gave the airplane a maximum speed of 95 mph and was used for training and barnstorming as long after the war as the Jenny was.

Many J-1s are still flying or are in museums. □

Standard J-1 with 180-hp Hisso engine.

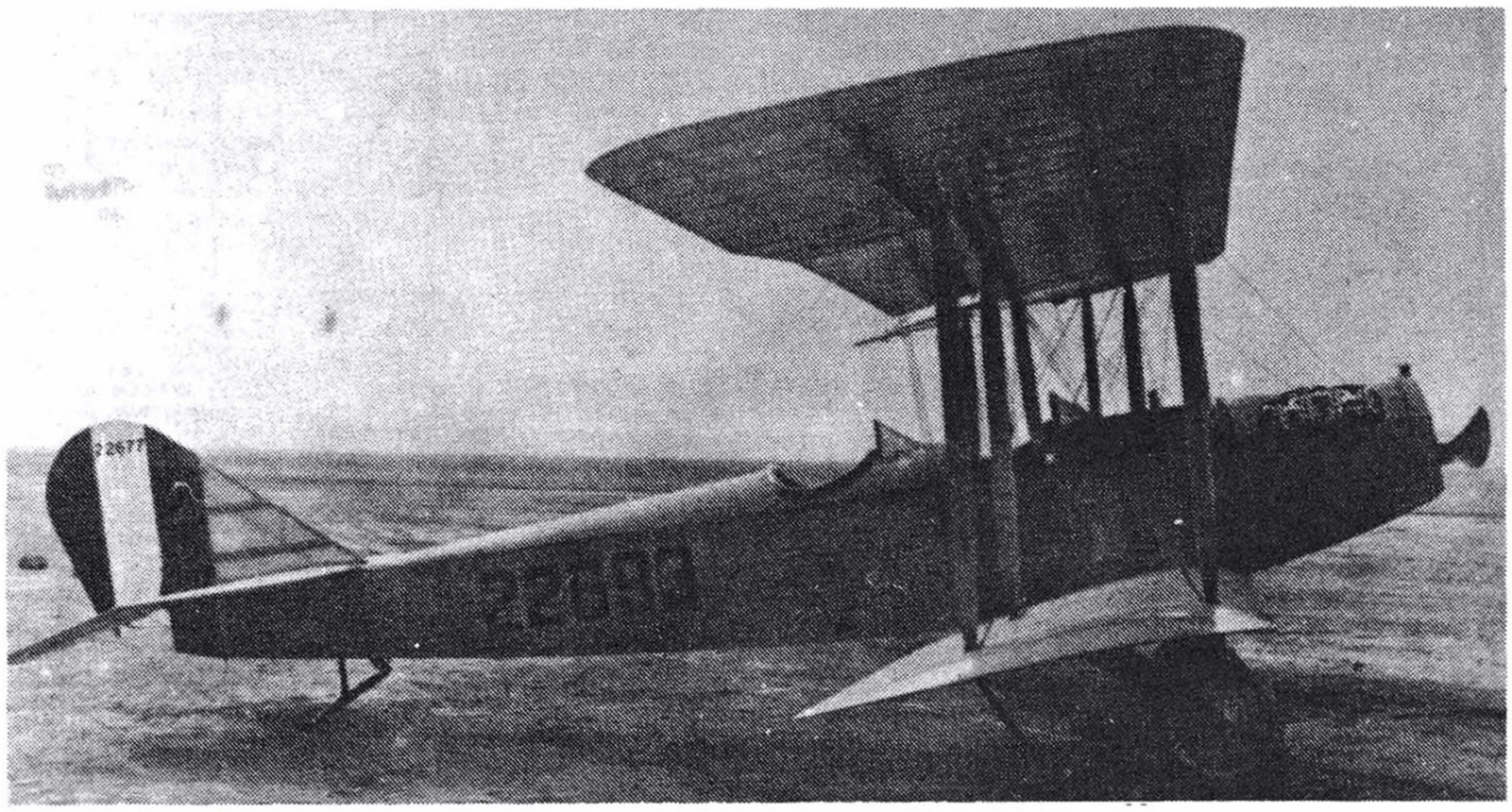

Standard J-1 with Curtiss OX5 engine.

Photos courtesy of Leonard Opdycke, WW I Aeroplanes.

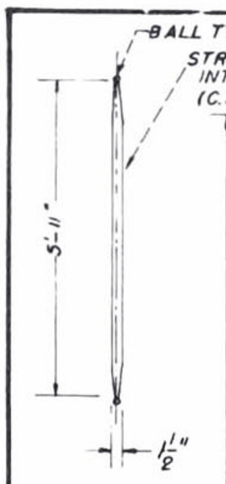

STRUT

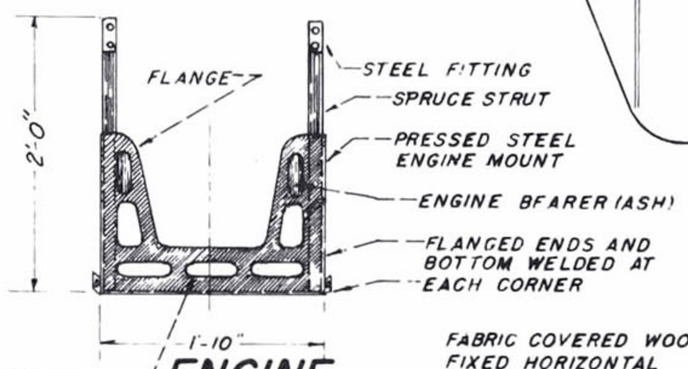

ENGINE BULKHEAD

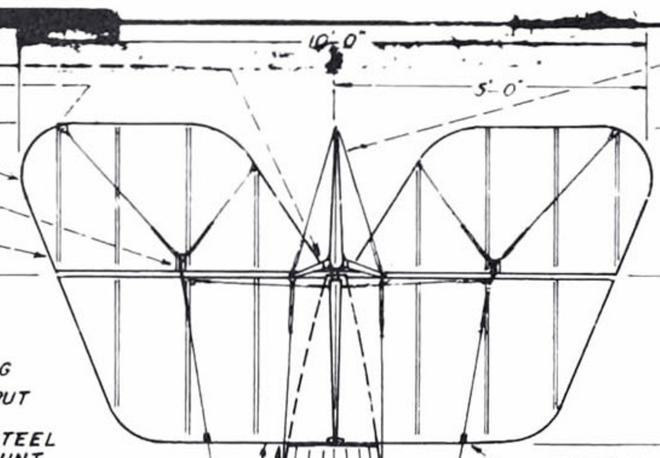

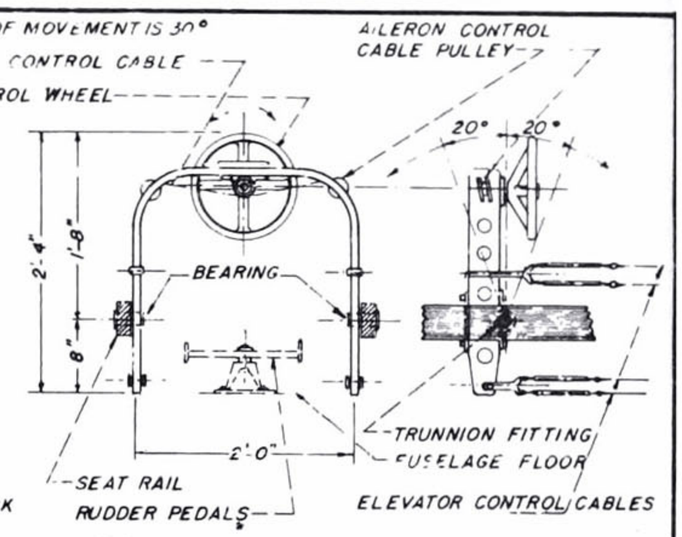

CONTROL BRIDGE

(LAMINATED SPRUCE)

(4.) THE DEPERDUSSIN TYPE CONTROL WAS USED ON STANDARD MODEL "J" TRAINING BIPLANES. FORE AND AFT MOVEMENT CONTROLS ELEVATOR POSITION. ROTATION OF CONTROL WHEEL OPERATES AILERONS. DUAL CONTROLS WERE INSTALLED IN FRONT COCKPIT THE COMMERCIAL MODIFICATIONS INCLUDED THE CONVENTIONAL TYPE JOY STICK CONTROLS.

(2) THE TURTLE DECK IS BUILT AS A SUB-ASSEMBLY OF THE FUSELAGE STRUCTURE. IT CONSISTS OF LONGITUDINAL SPRUCE STIFFENERS AND SEMI-ELLIPTICAL TRANSVERSE PLYWOOD FORMERS. BOTTOM PLANE WAS STIFFENED BY "X" BRACING

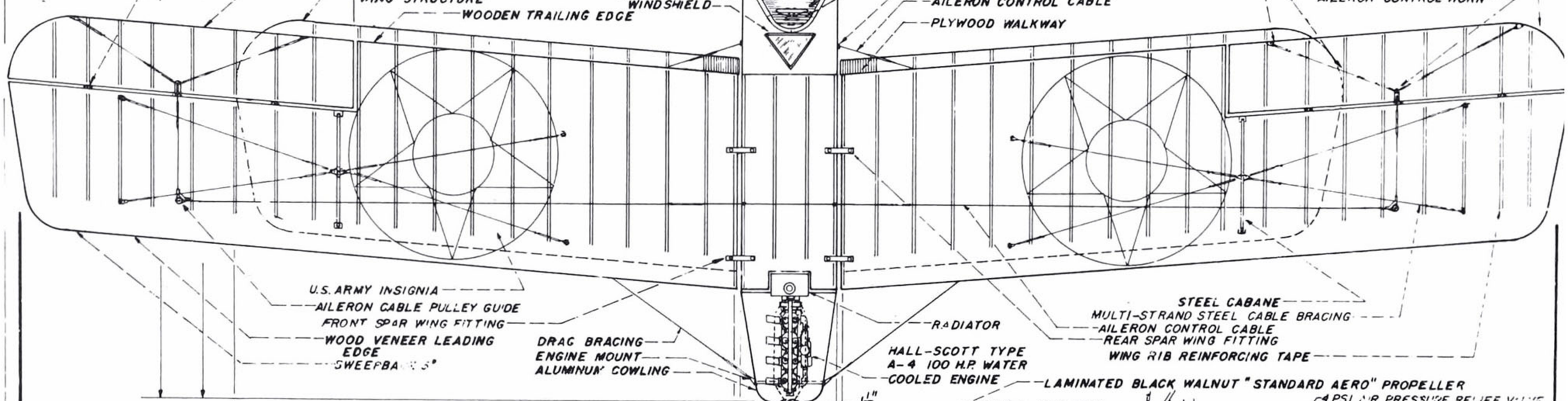

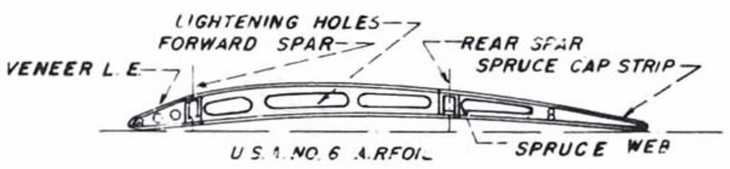

(1.) THE RIBS ARE SAWED FROM THICK MATERIAL TO REQUIRED PROFILE. HOLES IN WEB ARE BORED PRIOR TO SAWING. LIGHTENING HOLES ARE CUT AFTER SAWING. SPRUCE CAP STRIPS GLUED AND TACKED IN PLACE IN RIB JIG.

TYPICAL WING RIB

(5.) AILERON RANGE OF MOVEMENT WAS THE SAME FOR UP OR DOWN POSITION THE YAW DUE TO AILERON OPERATION REQUIRED RUDDER CORRECTION BY PILOT.

(6.) HORIZONTAL STABILIZER WAS FIXED ANGLE 0. INCIDENCE WAS 0°.

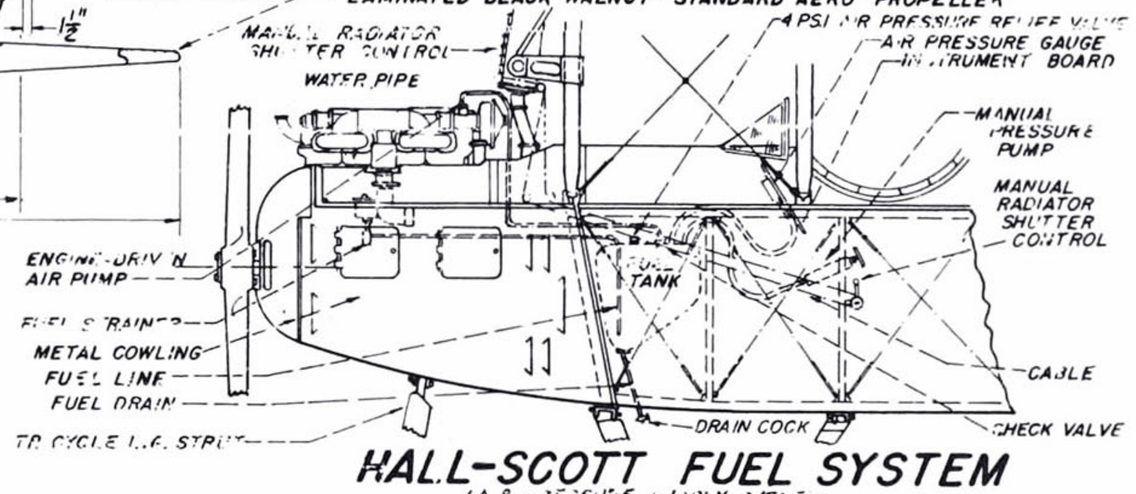

HALL-SCOTT FUEL SYSTEM

(AIR PRESSURE SUPPLY SYSTEM)

(3.) THE MODEL "J" STANDARD BIPLANE WING SECTION WAS THE R.A.F. 3 ON THE BASIC PRODUCTION AIRPLANE. LATE PRODUCTION AIRPLANE HAD U.S.A. 6 AIRFOIL.

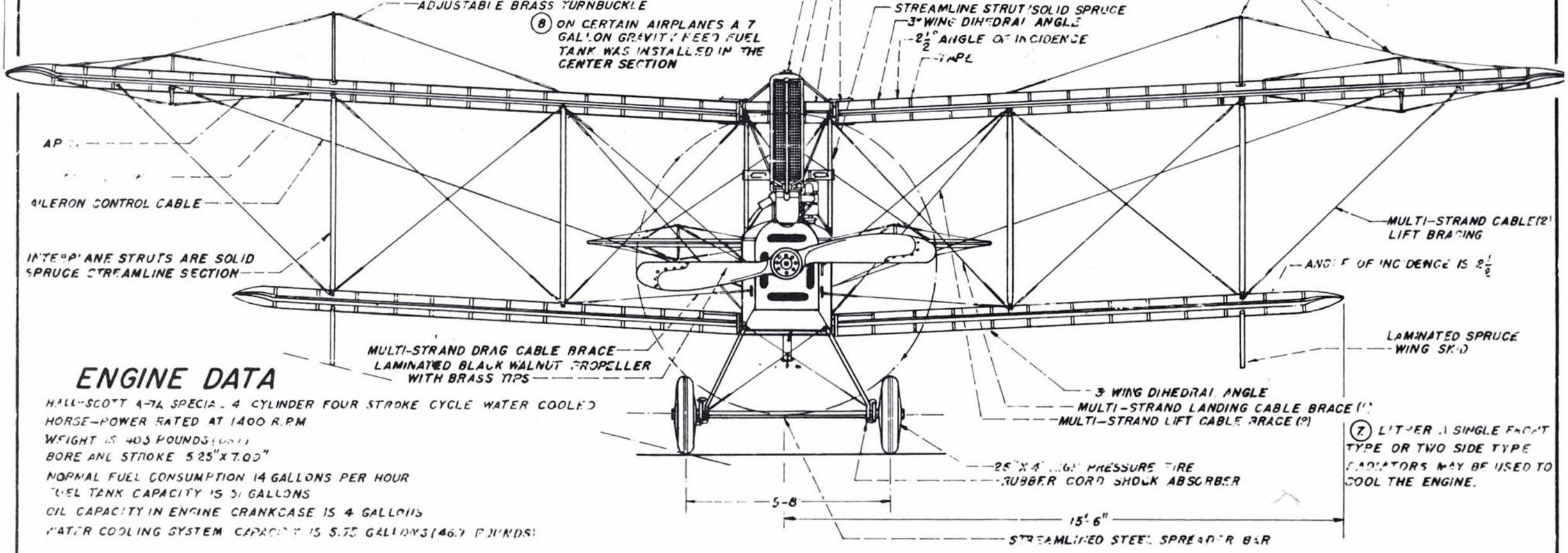

(7.) EITHER A SINGLE FRONT TYPE OR TWO SIDE TYPE RADIATORS MAY BE USED TO COOL THE ENGINE.

ENGINE DATA

HALL-SCOTT 4-74 SPECIAL 4 CYLINDER FOUR STROKE CYCLE WATER COOLED
HORSE-POWER RATED AT 1400 R.P.M.
WEIGHT IS 405 POUNDS (DRY)
BORE AND STROKE 5.25" X 7.00"
NORMAL FUEL CONSUMPTION 14 GALLONS PER HOUR
FUEL TANK CAPACITY IS 31 GALLONS
OIL CAPACITY IN ENGINE CRANKCASE IS 4 GALLONS
WATER COOLING SYSTEM CAPACITY IS 5.75 GALLONS (46.7 POUNDS)

STANDARD MODEL "J"

SHEET NO. 1

DRAWN BY WILLIS L. NYE

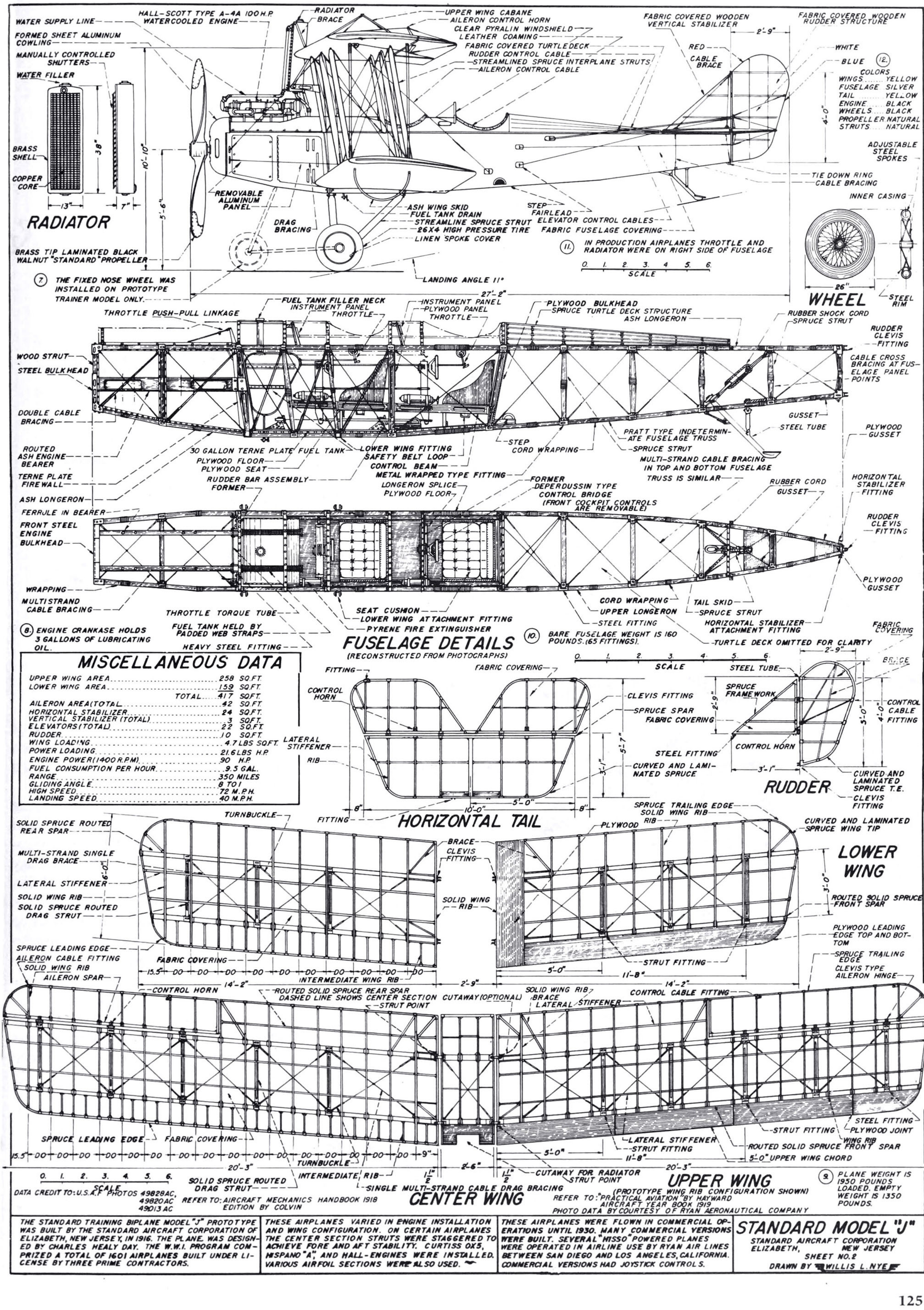

THE STANDARD TRAINING BIPLANE MODEL "J" PROTOTYPE WAS BUILT BY THE STANDARD AIRCRAFT CORPORATION OF ELIZABETH, NEW JERSEY, IN 1916. THE PLANE WAS DESIGNED BY CHARLES HEALY DAY. THE W.W.I. PROGRAM COMPRIZED A TOTAL OF 1601 AIRPLANES BUILT UNDER LICENSE BY THREE PRIME CONTRACTORS.

THESE AIRPLANES VARIED IN ENGINE INSTALLATION AND WING CONFIGURATION. ON CERTAIN AIRPLANES THE CENTER SECTION STRUTS WERE STAGGERED TO ACHIEVE FORE AND AFT STABILITY. CURTISS OX5, HISPANO "A", AND HALL-ENGINES WERE INSTALLED. VARIOUS AIRFOIL SECTIONS WERE ALSO USED.

THESE AIRPLANES WERE FLOWN IN COMMERCIAL OPERATIONS UNTIL 1930. MANY COMMERCIAL VERSIONS WERE BUILT. SEVERAL "HISSO" POWERED PLANES WERE OPERATED IN AIRLINE USE BY RYAN AIR LINES BETWEEN SAN DIEGO AND LOS ANGELES, CALIFORNIA. COMMERCIAL VERSIONS HAD JOYSTICK CONTROLS.

STANDARD MODEL "J"

STANDARD AIRCRAFT CORPORATION
ELIZABETH, NEW JERSEY
SHEET NO. 2
DRAWN BY WILLIS L. NYE

Thomas Morse S-4C &

drawings by WILLIS NYE

THE THOMAS Morse S-4C was a single-seat advanced trainer of which about 600 were built. Most went to the U.S. Army Air Service but a few also went to the U.S. Navy from 1917. They were powered by the 80-hp LeRhone rotary engine and also used the 100-hp Gnome rotary in some models.

Nicknamed "Tommy," the S-4C represented to student pursuit pilots all that was to be expected of a single-seat fighter by way of feel and appearance, plus a lot of gentleness that some combat types of WW I lacked. It was not considered good enough, either in performance or handling qualities to be used as a fighter. It never went overseas and was relegated to training fields during WW I.

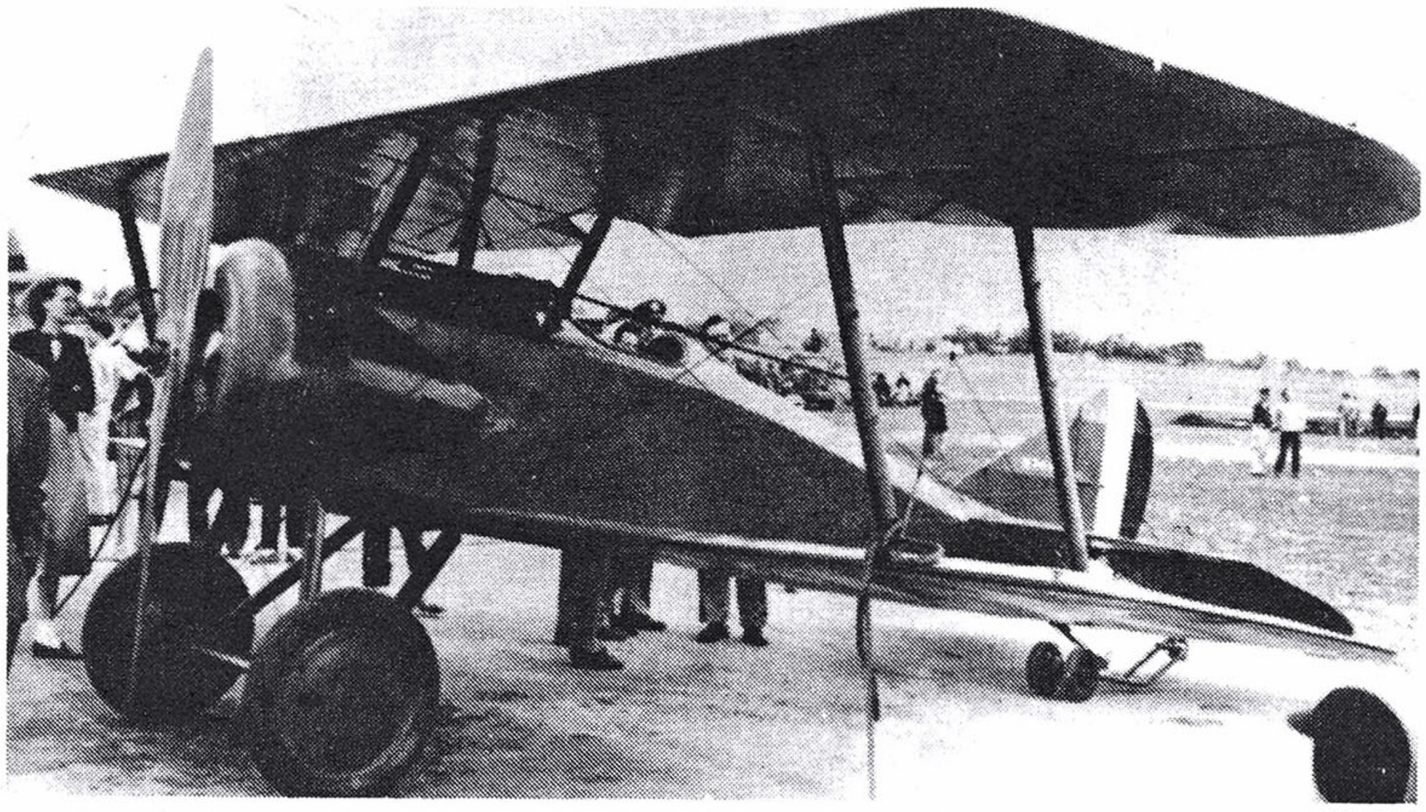

Designed as an advanced single-seat trainer for WW I fighter pilots, over 1,000 "Tommies" were built. This is the S-4B. Photo courtesy of Leonard Opdycke, WW I Aeroplanes.

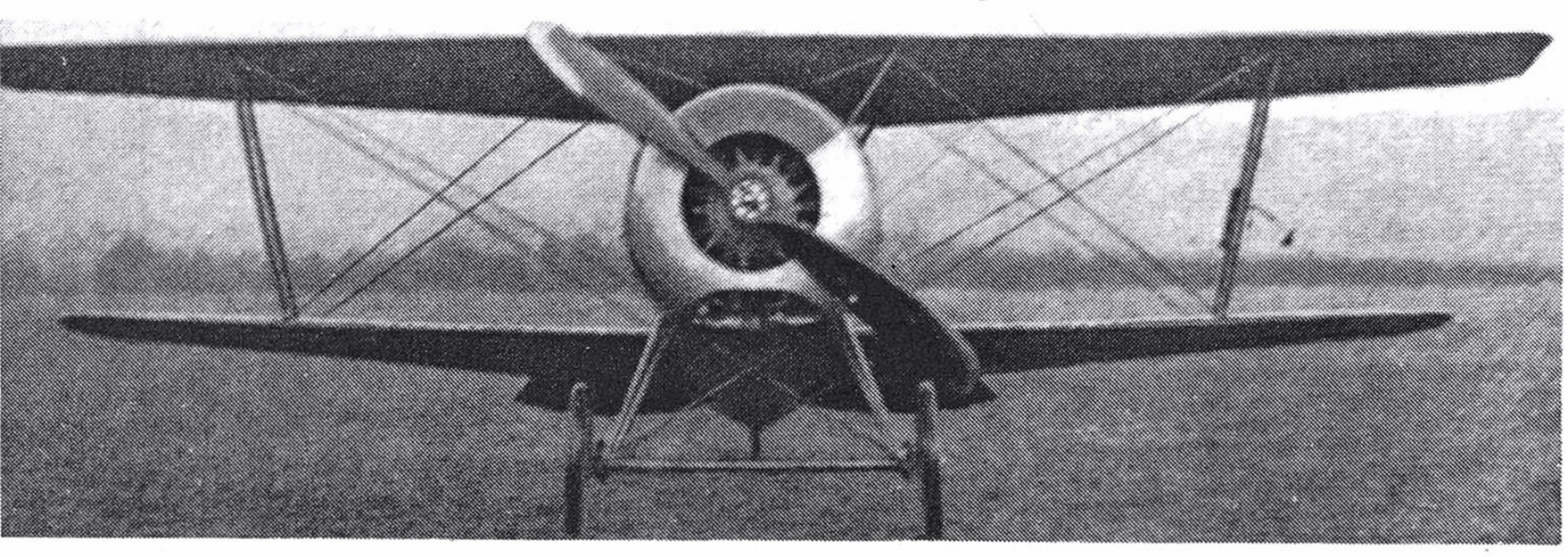

The S-4E above and the S-4C below were to be seen by thousands of movie buffs when Hollywood used the airplane in their celluloid wars. "Jane's All the World's Aircraft" photos.

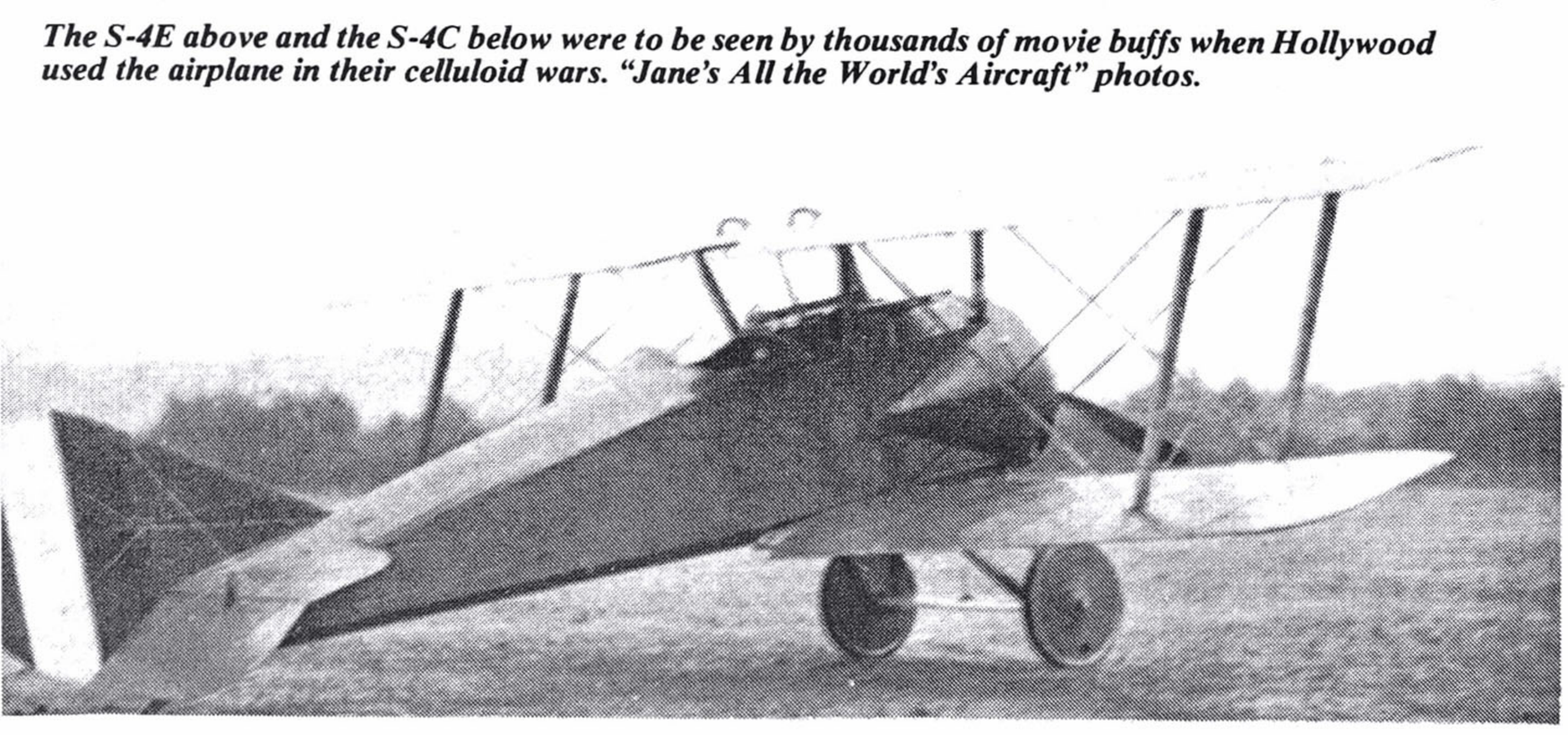

Over 1,000 were built and, following the Armistice, were declared surplus and purchased by sportsman pilots and barnstormers during the early '20s. The busy roar of its rotary engine that had echoed from dozens of training fields all over the country during the war continued to be heard until about 1930. The motion picture industry used a great many Tommys after that in Hollywood air epics.

Only one S-4B is left, at Cole Palen's Old Rhinebeck Aerodrome; four -C's are in museums, and there are no more -E's. □

THE AILERON CONTROL SYSTEM ON THE S4B IS CABLES CONCEALED INSIDE THE WING IN PLACE OF TORQUE TUBES. THE CABLES LEADING FROM THE JOY STICK WERE LOCATED IN THE PLANE OF THE AILERON PUSH-PULL TUBES.

OIL FOR ENGINE LUBRICATION IS SUPPLIED BY A SUPPLY LINE FROM THE OIL TANK IN CONJUNCTION WITH AN ENGINE-DRIVEN PRESSURE PUMP. CIRCULATION OF OIL UNDER PRESSURE TO INTERNAL PARTS OF THE ENGINE IS ASSISTED BY CENTRIFUGAL ACTION. A VISUAL OIL PULSATOR WAS MOUNTED IN THE PILOT'S COCKPIT TO INDICATE PROPER OPERATION OF THE PRESSURE PUMP. CASTOR OIL WAS THE ENGINE LUBRICANT.

T-M S4C

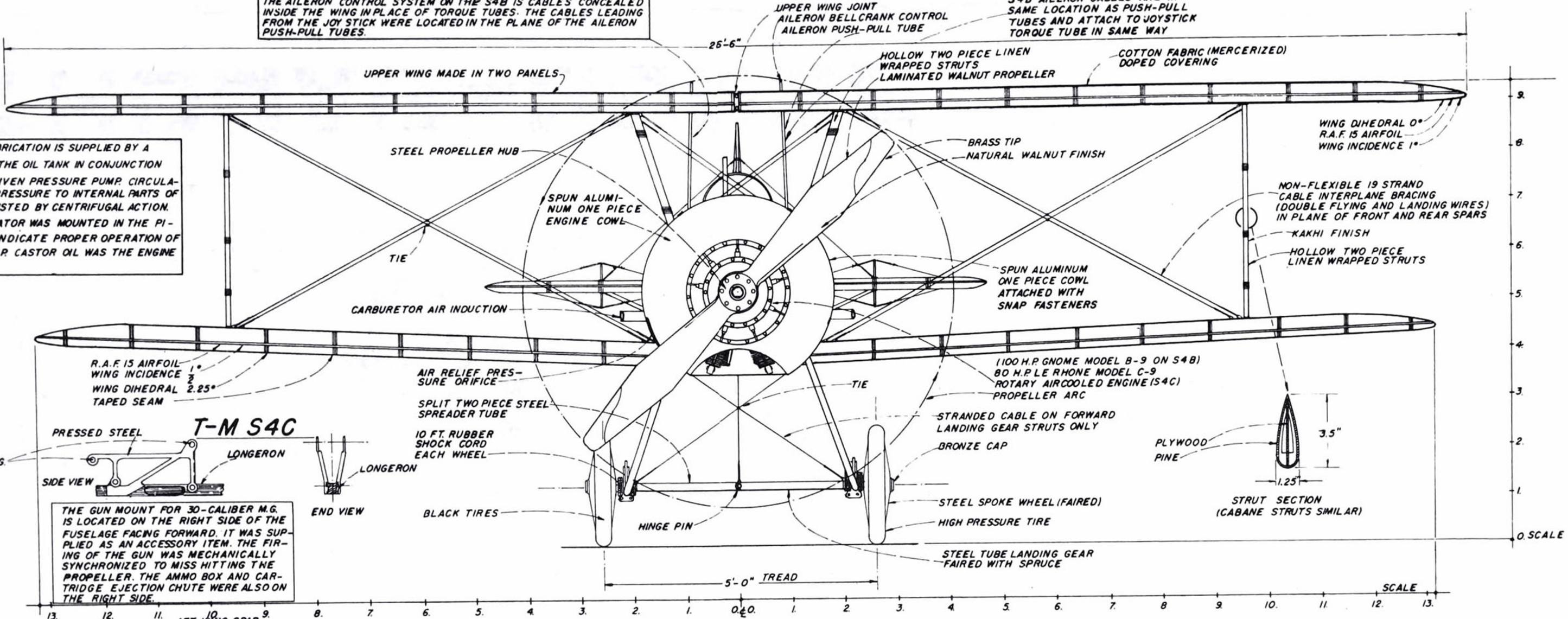

THE GUN MOUNT FOR 30-CALIBER M.G. IS LOCATED ON THE RIGHT SIDE OF THE FUSELAGE FACING FORWARD. IT WAS SUPPLIED AS AN ACCESSORY ITEM. THE FIRING OF THE GUN WAS MECHANICALLY SYNCHRONIZED TO MISS HITTING THE PROPELLER. THE AMMO BOX AND CARTRIDGE EJECTION CHUTE WERE ALSO ON THE RIGHT SIDE.

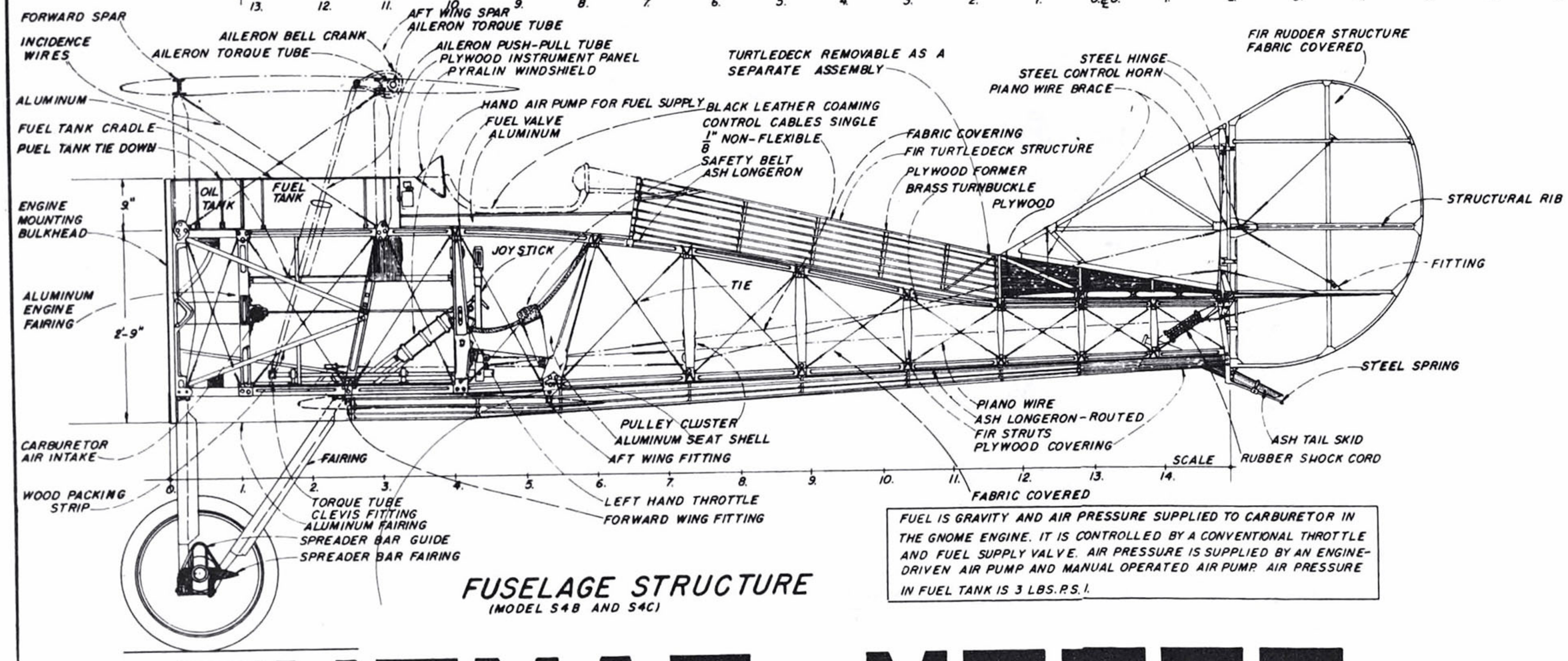

FUSELAGE STRUCTURE
(MODEL S4B AND S4C)

FUEL IS GRAVITY AND AIR PRESSURE SUPPLIED TO CARBURETOR IN THE GNOME ENGINE. IT IS CONTROLLED BY A CONVENTIONAL THROTTLE AND FUEL SUPPLY VALVE. AIR PRESSURE IS SUPPLIED BY AN ENGINE-DRIVEN AIR PUMP AND MANUAL OPERATED AIR PUMP. AIR PRESSURE IN FUEL TANK IS 3 LBS. P.S.I.

THOMAS-MORSE S4B SCOUT BIPLANE

THE PLANE MODEL S4B DEVELOPED FOR U.S. ARMY HAD CONSIDERABLE MODIFICATIONS TO THE BASIC PROTOTYPE DESIGN. THE FOLLOWING ARE THE MAJOR DESIGN CHANGES IN THE S4B FLIGHT TESTED SEPTEMBER 1917.

(1) TAIL SKID INCREASED IN SECTION AND STEEL SHOE ATTACHED.
(2) WING AND CONTROL SURFACES TRAILING EDGES CHANGED TO STEEL.
(3) LOWER WING REAR SPAR INCREASED IN DEPTH.
(4) IMPROVED ARRANGEMENT OF INSTRUMENTS ON INSTRUMENT PANEL.
(5) LEATHER TOE CLIPS ATTACHED TO RUDDER BAR.
(6) JOY STICK CONTROL IN PLACE OF THE DEPERDUSSIN WHEEL CONTROL.
(7) THROTTLE LEVER INSTEAD OF THROTTLE WHEEL USED ON GNOME ENGINES.
(8) INCREASED PROPELLER GROUND CLEARANCE.
(9) STRUTS BEHIND PILOT'S SEAT INCREASED IN SIZE.
(10) ENGINE HOOD MADE IN ONE PIECE. IMPROVED METHOD OF ATTACHMENT
(11) CONTROL SURFACES REDUCED IN AREA.
(12) FUSELAGE SHORTENED 2'-9" OVERALL.
(13) INCREASED WINDSHIELD SIZE.
(14) IMPROVED PREVENTION OF ENGINE OIL LEAKS.
(15) NEW TYPE CONTROL SURFACE HORNS.
(16) DELETION OF SPINNER ON PROPELLER HUB.
(17) IMPROVED WORKMANSHIP ON ENTIRE STRUCTURE.
(18) RELOCATION OF LIFT CABLES TO BE IN THE PLANE OF THE LOAD.
(19) REDESIGN OF ENTIRE FUEL TANK AND FUEL SUPPLY AND CONTROL.

THE ABOVE MAJOR CHANGES WERE INCORPORATED IN SUBSEQUENT PRODUCTION AIRCRAFT.

MR. D.B. WOODARD OF RICHLAND CENTER, WISCONSIN OWNS AND FLIES ONE OF THE T-M S4B STILL IN EXISTENCE. THE AUTHOR OF THESE DRAWINGS SAW PLANES OF THIS TYPE FLY DURING W.W.I. IN LATER YEARS THESE TYPE PLANES WERE MODIFIED TO CARRY PASSENGERS BY THE INSTALLATION OF A CURTISS OX-5 WATER COOLED ENGINE. T-M PARTS WERE ALSO USED TO BUILD OTHER COMMERCIAL AIRPLANES. T-MS WERE USED IN MOVIES TO SIMULATE W.W.I AIRCRAFT. PILOT PAUL KOTZ FLIES A T-M S4B.

THE PROTOTYPE S-4 WAS SIMILAR IN APPEARANCE TO THE S4B EXCEPT THE AILERONS AND ELEVATORS WERE GREATER AND THE FUSELAGE WAS LONGER. MODEL S-4A DID NOT GO INTO PRODUCTION.

THESE DRAWINGS WERE MADE AT THE SUGGESTION OF MAJOR KIMBROUGH S. BROWN, MAJOR, U.S.A.F., EGLIN FIELD, FLORIDA.

THE THOMAS-MORSE TRAINING AIRPLANES WERE DESIGNED BY WILLIAM T. THOMAS PIONEER FLYER AND FOUNDER OF THE COMPANY.

THOMAS-MORSE

(SHEET NO. 2)

(DRAWN BY WILLIS L. NYE FOR MODEL AIRPLANE NEWS)

(RIGHT PANEL SHOWN—LEFT PANEL IS SIMILAR)

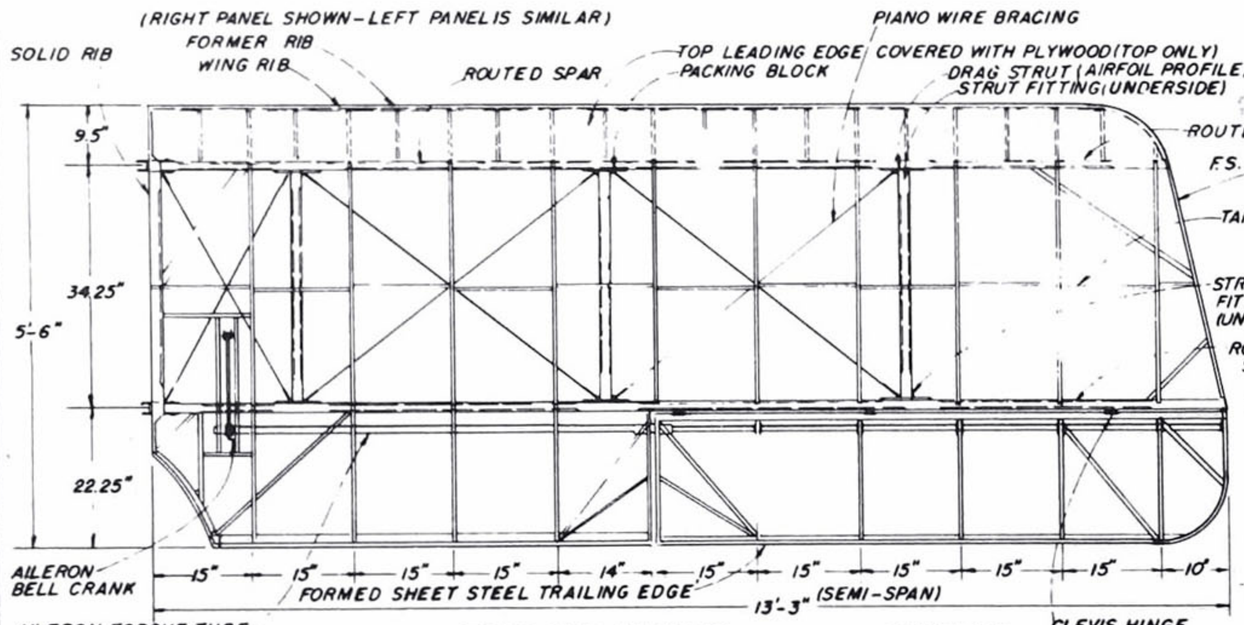

UPPER WING
(S4C ONLY)

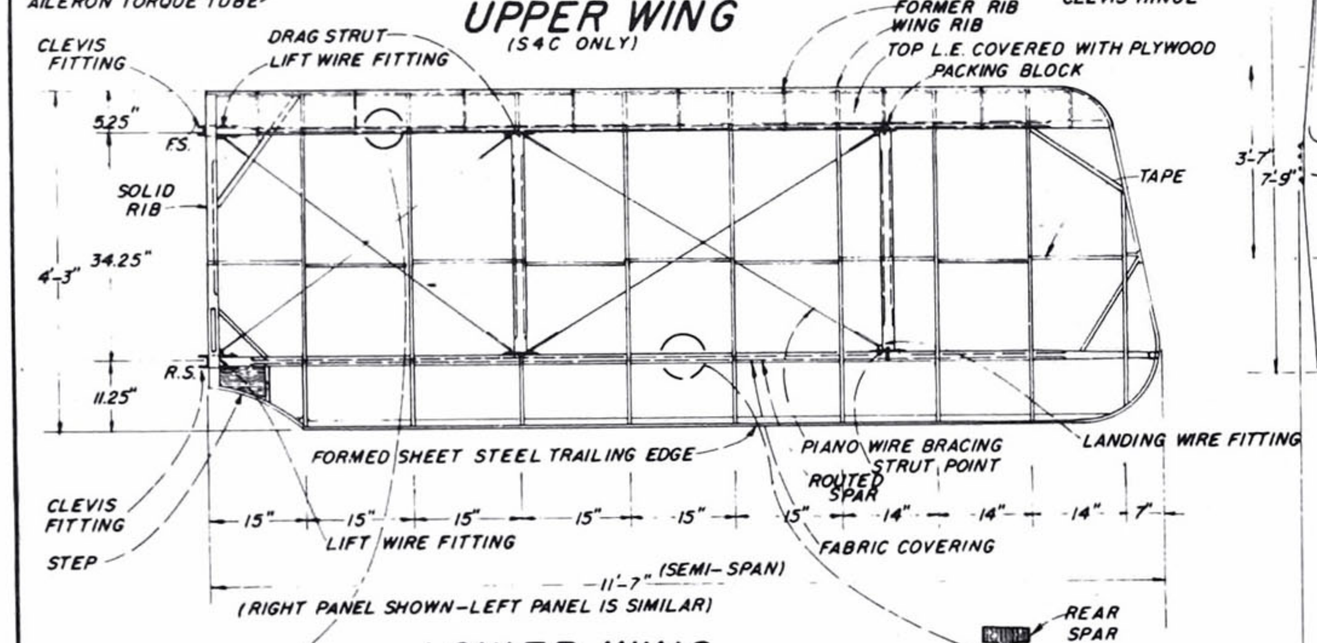

LOWER WING
(S4B AND S4C SIMILAR)

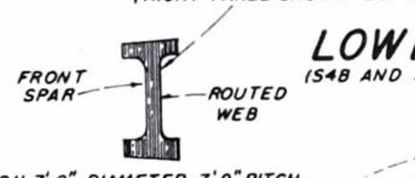

WING FOR S4B IS SAME STRUCTURAL CONFIGURATION AS S4C EXCEPT AILERON AREA IS GREATER

AILERONS ACTUATED BY TORQUE TUBE

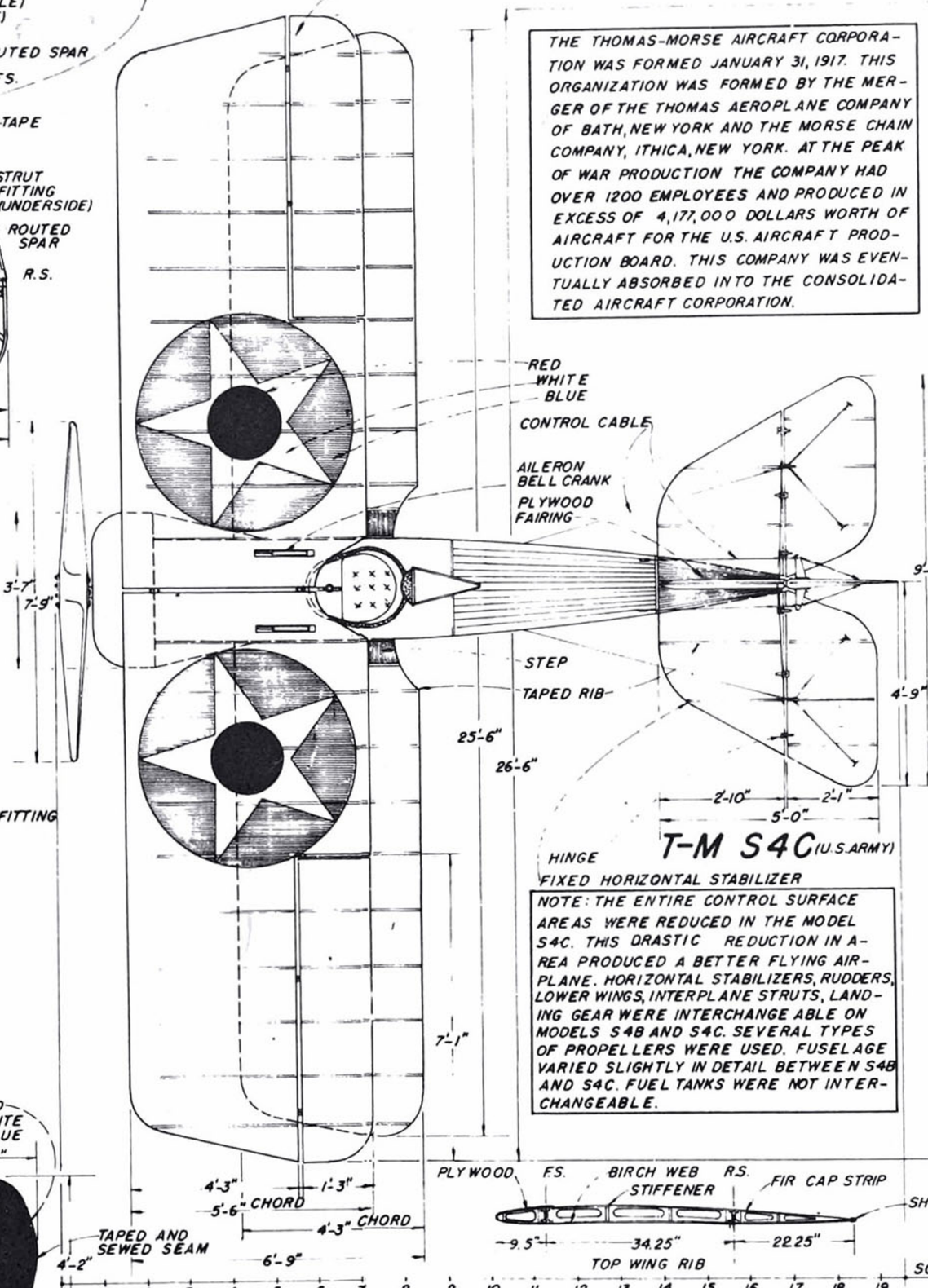

T-M S4C (U.S. ARMY)

THE THOMAS-MORSE AIRCRAFT CORPORATION WAS FORMED JANUARY 31, 1917. THIS ORGANIZATION WAS FORMED BY THE MERGER OF THE THOMAS AEROPLANE COMPANY OF BATH, NEW YORK AND THE MORSE CHAIN COMPANY, ITHICA, NEW YORK. AT THE PEAK OF WAR PRODUCTION THE COMPANY HAD OVER 1200 EMPLOYEES AND PRODUCED IN EXCESS OF 4,177,000 DOLLARS WORTH OF AIRCRAFT FOR THE U.S. AIRCRAFT PRODUCTION BOARD. THIS COMPANY WAS EVENTUALLY ABSORBED INTO THE CONSOLIDATED AIRCRAFT CORPORATION.

NOTE: THE ENTIRE CONTROL SURFACE AREAS WERE REDUCED IN THE MODEL S4C. THIS DRASTIC REDUCTION IN AREA PRODUCED A BETTER FLYING AIRPLANE. HORIZONTAL STABILIZERS, RUDDERS, LOWER WINGS, INTERPLANE STRUTS, LANDING GEAR WERE INTERCHANGE ABLE ON MODELS S4B AND S4C. SEVERAL TYPES OF PROPELLERS WERE USED. FUSELAGE VARIED SLIGHTLY IN DETAIL BETWEEN S4B AND S4C. FUEL TANKS WERE NOT INTERCHANGEABLE.

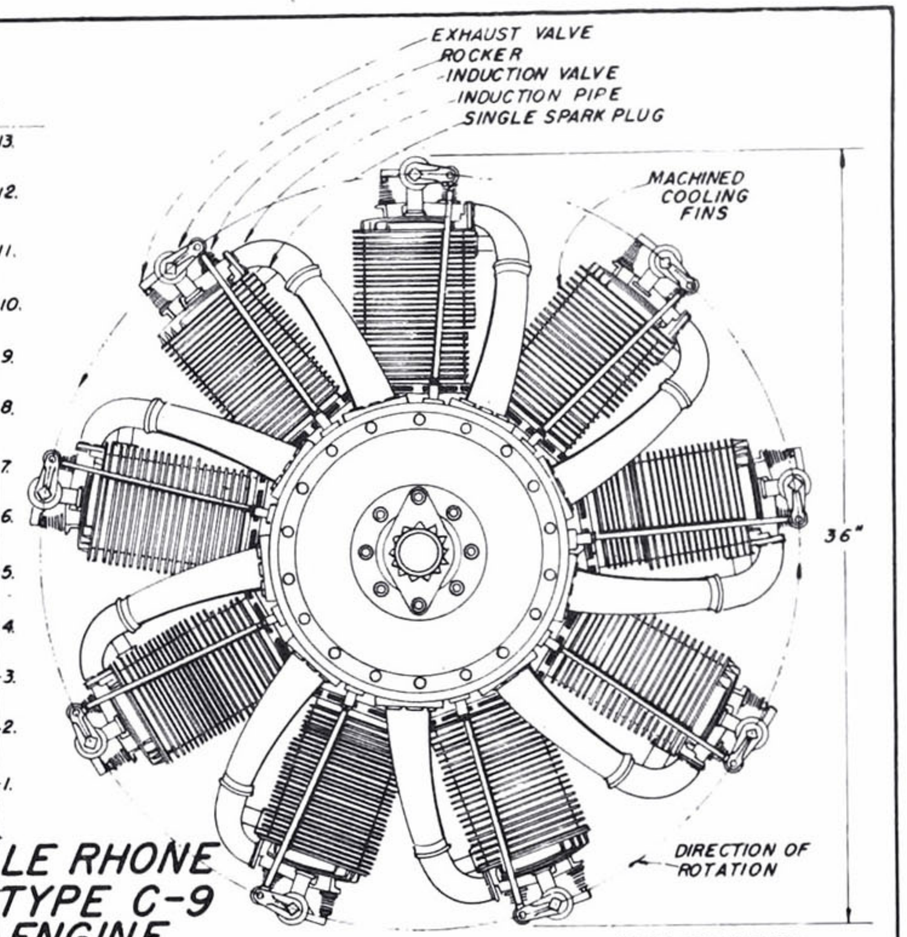

LE RHONE TYPE C-9 ENGINE

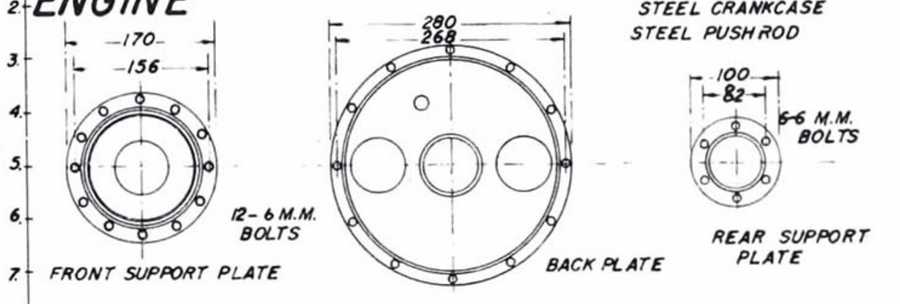

80 H.P. LE RHONE ENGINE (U.S.A.S. TYPE)	
CYLINDER BORE	105 M.M.
DO STROKE	140 M.M.
H.P. AT AIRSCREWSHAFT AT NORMAL SPEED	94
MAXIMUM ENGINE R.P.M.	1200
DRY ENGINE WEIGHT	270 POUNDS.
FUEL CONSUMPTION	.645 PTS. PER HOUR.

THE ENGINE WAS AVAILABLE IN LONG, MEDIUM, OR SHORT VERSIONS. THE CRANKSHAFT WAS STATIONARY AND THE CYLINDERS REVOLVED AROUND IT. (LONG VERSION ON T-M).

CYLINDERS	CHROME NICKEL STEEL		
CONNECTING RODS	DO	DO	DO
THRUST BLOCK	DO	DO	DO
PISTONS	CAST IRON		
OIL PUMP	OSCILLATION CYLINDER TYPE		

THE ENGINES WERE MANUFACTURED UNDER LICENSE IN THE UNITED STATES BY UNION SWITCH AND SIGNAL COMPANY AT SWISSVALE, PENNSYLVANIA.
SINGLE EXHAUST VALVE ACTION. SINGLE INTAKE VALVE SINGLE MAGNETO IGNITION SYSTEM.

PARAGON 7'-9" DIAMETER 7'-9" PITCH

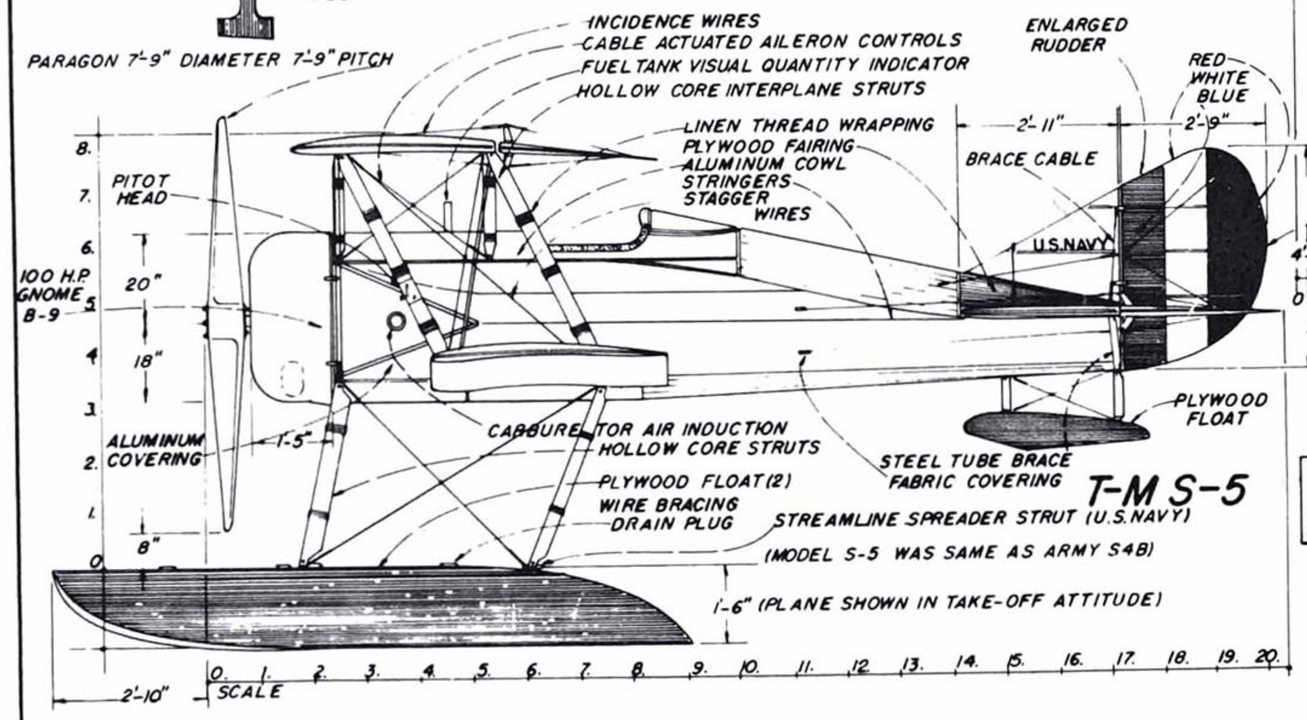

T-M S-5

TAIL SURFACES (S4C)
(UNDERSIDE VIEW)

NOTE: TAIL SURFACES FOR S4B ARE SIMILAR IN STRUCTURAL CONFIGURATION.

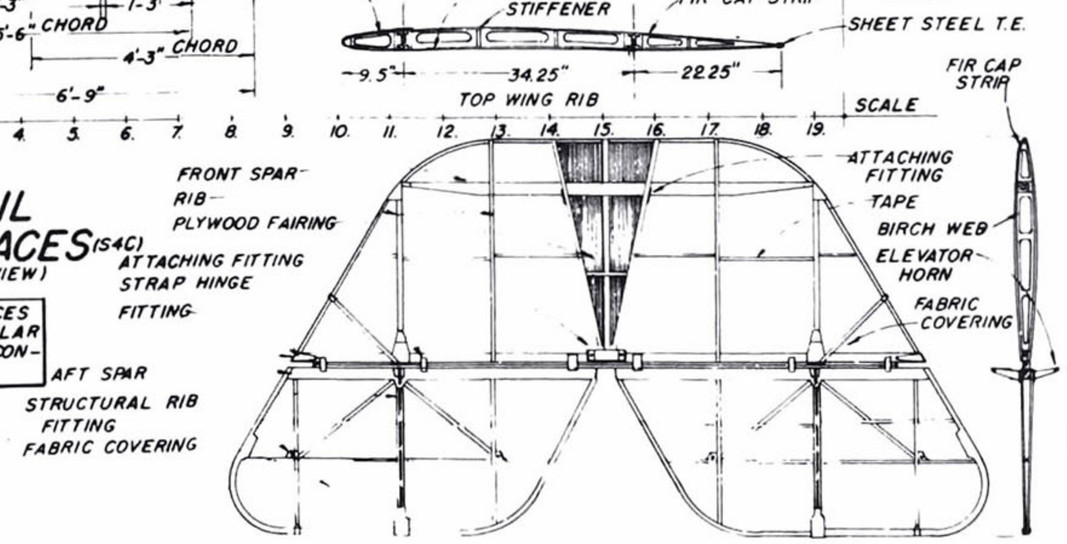

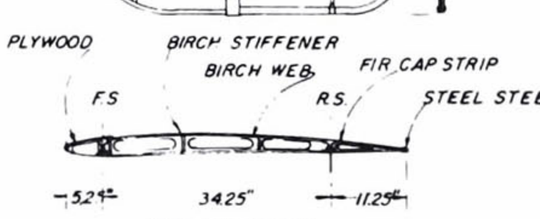

VERTICAL STABILIZER
(S4C, S4B, S5 SIMILAR)

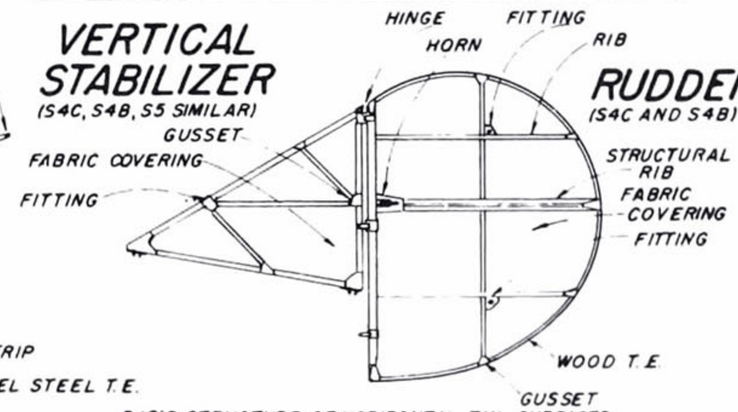

RUDDER
(S4C AND S4B)

BASIC STRUCTURE OF HORIZONTAL TAIL SURFACES IS THE SAME FOR S4B AS THE S4C EXCEPT IN AREA.

THOMAS—MORSE

(SHEET NO. 3)

(DRAWN BY WILLIS L. NYE FOR MODEL AIRPLANE NEWS)

ACKNOWLEDGEMENTS OF DATA

FRANK STRNAD, AMERICAN AVIATION HISTORICAL SOCIETY
BRUCE REYNOLDS, D. D. D. D.
ESTHER B. MUELLER, AIR FORCE CENTRAL MUSEUM
WM. T. LARKINS, AMERICAN AVIATION HISTORICAL SOCIETY

INSTRUMENTS THOMAS-MORSE S4B

JOHNS-MANVILLE TACHOMETER GRAD. 0-2000.
FLEXIBLE TACHOMETER SHAFT 6'-0" LONG.
U.S. AIR PRESSURE GAUGE, SIZE 2, 0 TO 6 LBS.
TRIUMPH FUEL QUANTITY INDICATOR, SIZE 29.
MAGNETIC COMPASS.
AIRSPEED INDICATOR, FOXBORO, 0 TO 120 M.P.H.
ZAHN TYPE PITOT TUBE.
BAROGRAPH, 0-20000 FEET.
DIAMOND PUSH BUTTON SWITCH.
NAME PLATE.
AIR RELIEF VALVE AND PRESSURE GAUGE.
FUEL SHUT-OFF VALVE.
HAND AIR-PRESSURE PUMP WITH COCK.
OIL PULSATOR WITH 2 SHUT-OFF COCKS.
ENGINE IGNITION SWITCH.
NOTE: INSTRUMENTS FOR T-M S4C ARE SAME.

GNOME MONOSOUPAPE ENGINE MODEL B-9 100 H.P.

THIS ENGINE WAS MANUFACTURED UNDER LICENSE IN THE U.S.A. BY THE GENERAL VEHICLE COMPANY, INC., LONG ISLAND, NEW YORK. THIS TYPE OF ENGINE HAS A STATIONARY CRANKSHAFT. THE CYLINDERS ROTATE CARRYING THE PROPELLER WITH THEM. THE ODD NUMBER OF CYLINDERS MAKES IT POSSIBLE TO SECURE A UNIFORM PERIOD OF EXPLOSION. THE ENGINE R.P.M. IS 1200. OIL CONSUMPTION 2 GALLONS PER HOUR. FUEL CONSUMPTION 10 GALLONS PER HOUR. ENGINE WEIGHT 300 POUNDS. THE STATIONARY CRANKSHAFT FUNCTIONS AS A MEANS OF ATTACHING THE ENGINE TO THE FUSELAGE.

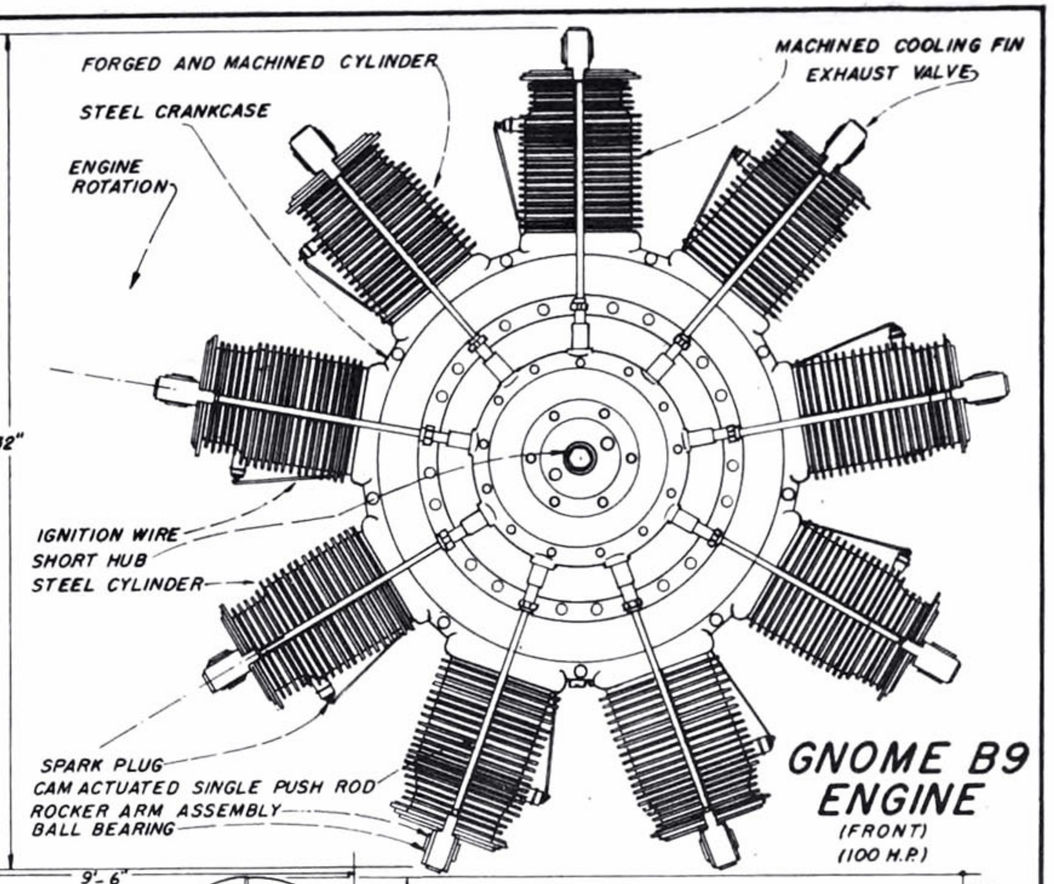

GNOME B9 ENGINE
(FRONT)
(100 H.P.)

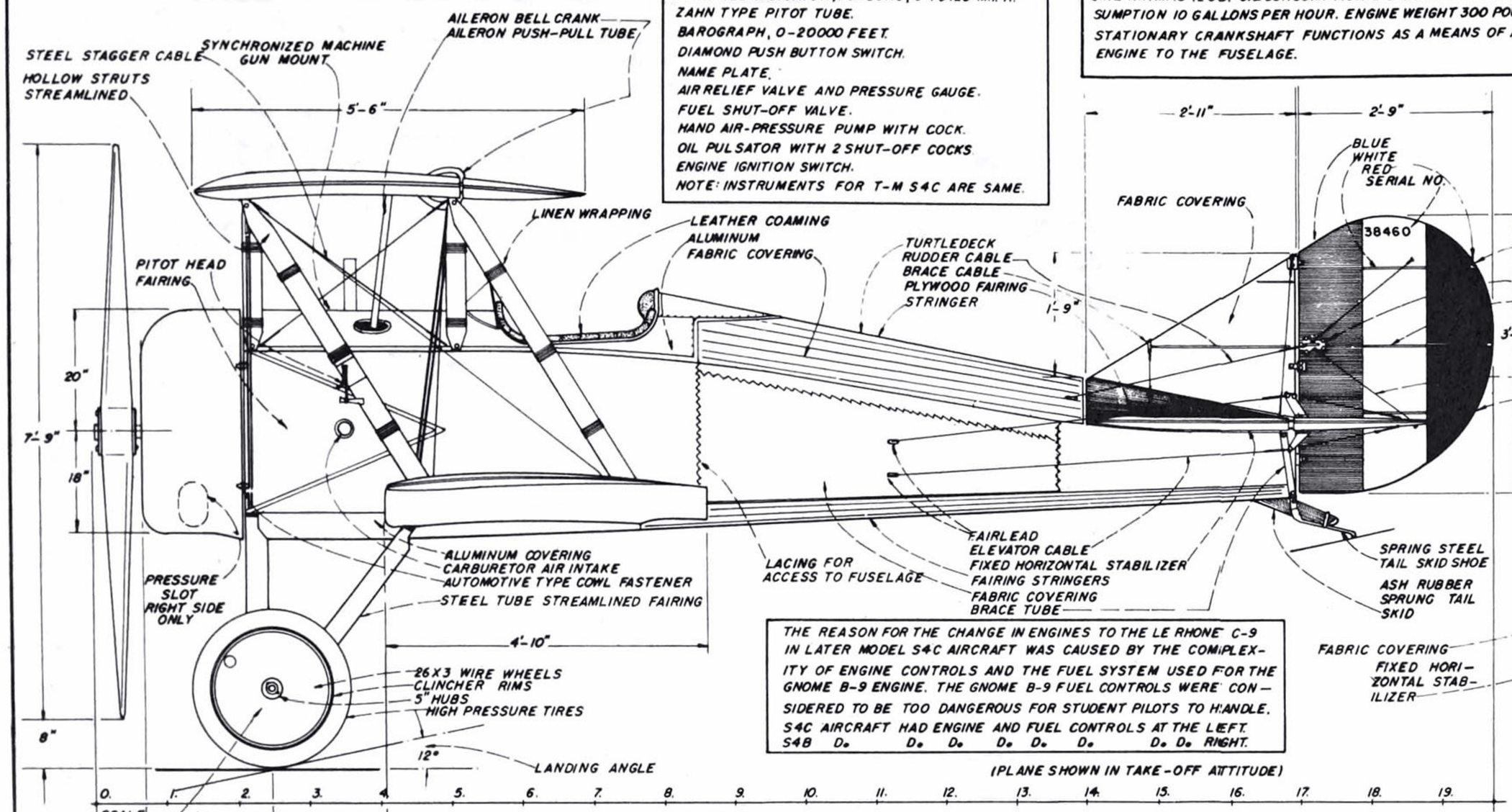

T-M S4C

THE REASON FOR THE CHANGE IN ENGINES TO THE LE RHONE C-9 IN LATER MODEL S4C AIRCRAFT WAS CAUSED BY THE COMPLEXITY OF ENGINE CONTROLS AND THE FUEL SYSTEM USED FOR THE GNOME B-9 ENGINE. THE GNOME B-9 FUEL CONTROLS WERE CONSIDERED TO BE TOO DANGEROUS FOR STUDENT PILOTS TO HANDLE. S4C AIRCRAFT HAD ENGINE AND FUEL CONTROLS AT THE LEFT. S4B D. D. D. D. D. D. D. D. D. RIGHT.

(PLANE SHOWN IN TAKE-OFF ATTITUDE)

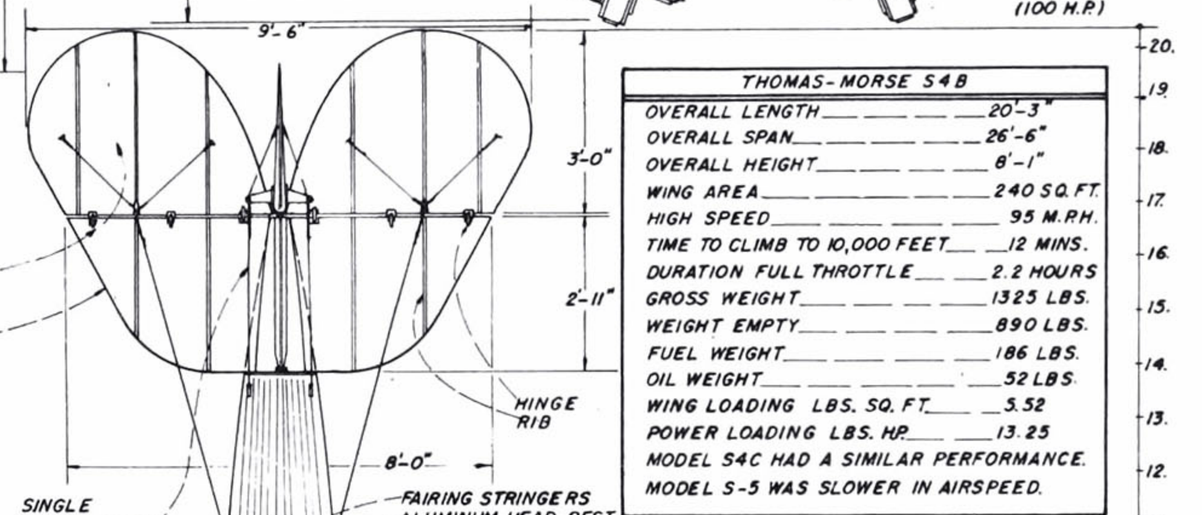

THOMAS-MORSE S4B

OVERALL LENGTH	20'-3"
OVERALL SPAN	26'-6"
OVERALL HEIGHT	8'-1"
WING AREA	240 SQ. FT.
HIGH SPEED	95 M.P.H.
TIME TO CLIMB TO 10,000 FEET	12 MINS.
DURATION FULL THROTTLE	2.2 HOURS
GROSS WEIGHT	1325 LBS.
WEIGHT EMPTY	890 LBS.
FUEL WEIGHT	186 LBS.
OIL WEIGHT	52 LBS.
WING LOADING LBS. SQ. FT.	5.52
POWER LOADING LBS. HP.	13.25

MODEL S4C HAD A SIMILAR PERFORMANCE.
MODEL S-5 WAS SLOWER IN AIRSPEED.

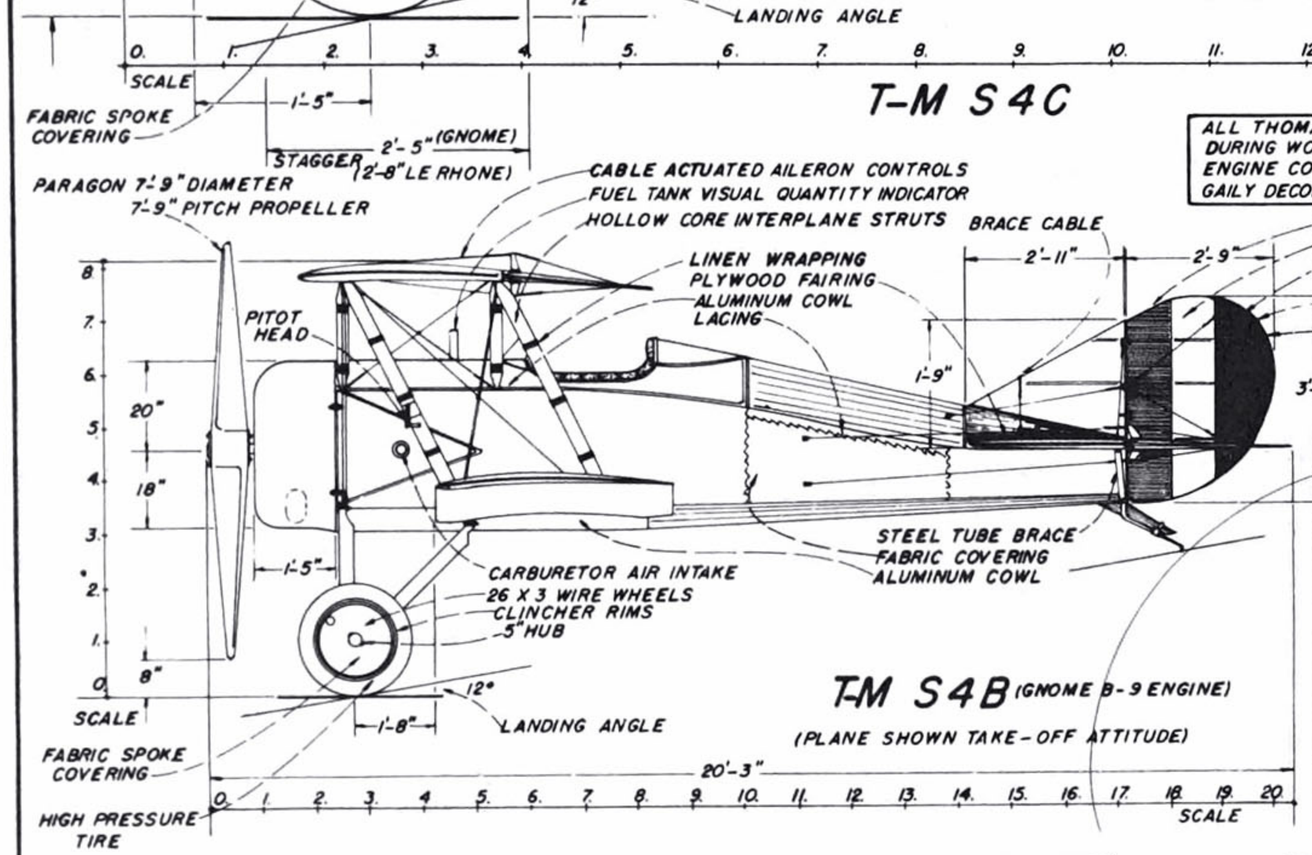

T-M S4B (GNOME B-9 ENGINE)

(PLANE SHOWN TAKE-OFF ATTITUDE)

ALL THOMAS-MORSE AIRCRAFT PROCURED DURING WORLD WAR I WERE FINISHED IN KHAKI. ENGINE COWLS AND WHEELS WERE SOMETIME GAILY DECORATED.

THOMAS-MORSE PROCUREMENT

INITIAL DELIVERY OF S4B AIRPLANES MADE IN NOVEMBER, 1917 OF A QUANTITY OF 100, GNOME B-9 ENGINES. 50 TYPE S4C WITH GNOME B-9 ENGINES AND 447 S4C WITH LE RHONE C-9 ENGINES DELIVERED STARTING MAY, 1918. U.S. NAVY PROCURED 20 S-5 WITH TWIN FLOATS.

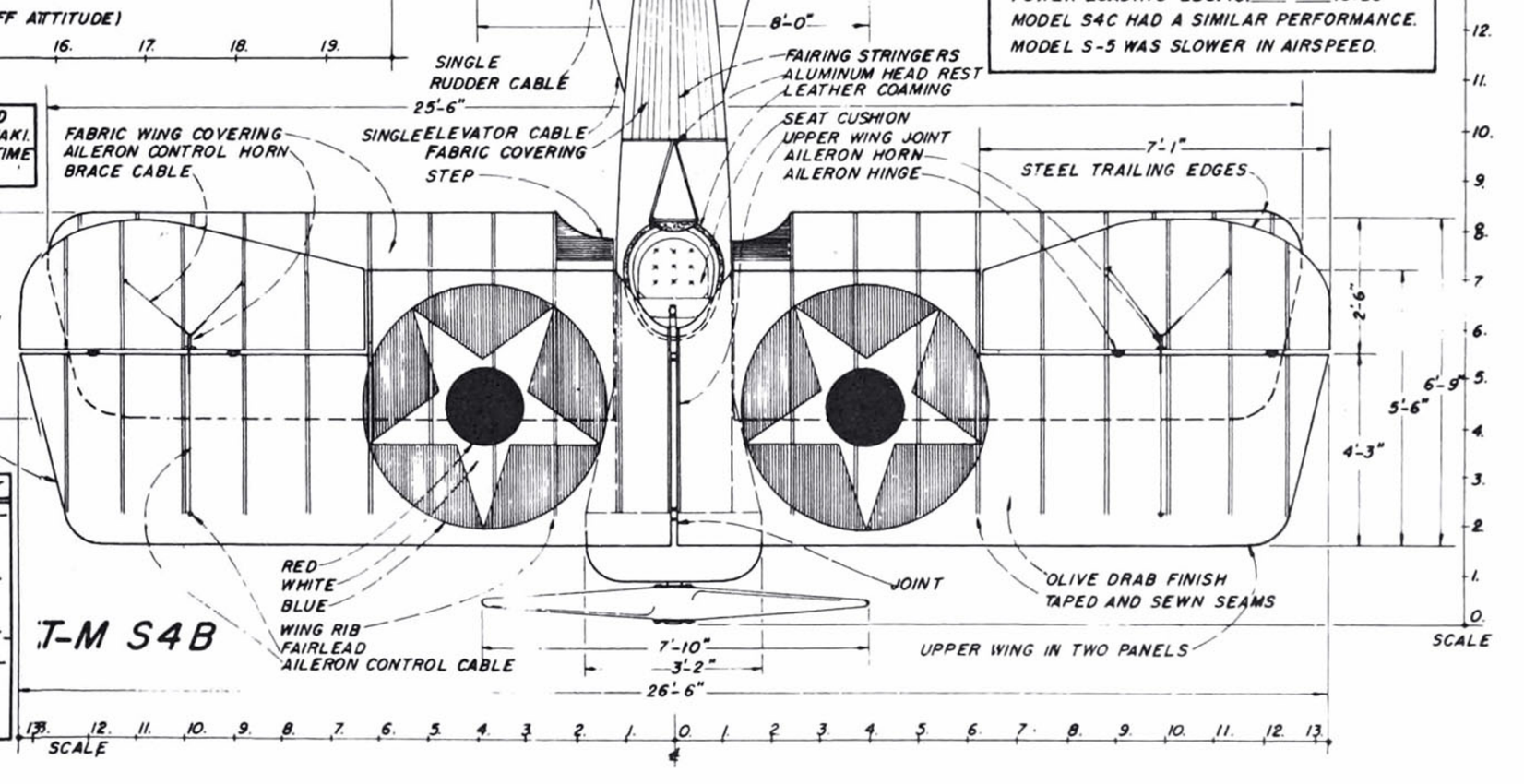

T-M S4B

THOMAS-MORSE • S4C

MANUFACTURED BY THOMAS-MORSE AIRCRAFT CORP.

(SHEET NO. 1)

(DRAWN BY WILLIS L. NYE FOR MODEL AIRPLANE NEWS)

THOMAS- MORSE W.W.I TYPES	
MB-1	HIGH WING MONOPLANE 2 PLACE FIGHTER 450 H.P.
MB-2	BIPLANE FIGHTER 450 H.P. LIBERTY ENGINE 2 PLACE
MB-3	BIPLANE SINGLE PLACE FIGHTER 300 H.P. HISSO
MB-4	BIPLANE 2 PLACE MAILPLANE 2-300 H.P. HISSO
S4, S4A, S4B, S4C, S4E, S5 TRAINING BIPLANES SINGLE PLACE	

AFT ENGINE FRAME
CABANE STRUT FITTING
OIL TANK
FUEL TANK
FUSELAGE LONGERON
F.S.
R.S.
FUEL TANK CRADLE
FITTING
ROUTED LONGERON TAPERED ASH STRUT
TAIL SKID FITTING
TERNE PLATE FIREWALL
FORWARD ENGINE MOUNT

S4C FUSELAGE SIDE TRUSS

(OPPOSITE SIDE SIMILAR)
(S4B TRUSSES ARE SIMILAR)

SEAT SUPPORT
ASH LONGERON
OIL TANK
FUEL TANK
PILOT
FITTING
CONVENTIONAL DEP CONTROLS INSTALLED
ASH DOUBLER
LINEN WRAPPER

TOP TRUSS

FITTING
PLYWOOD HEEL TROUGH
F.S.
R.S.
INDETERMINATE FUSELAGE TRUSS
PIANO WIRE
ASH LONGERON
ASH STRUT
TIE
PLYWOOD

BOTTOM TRUSS

STEEL TUBE
STRUT FITTING
STEEL FORWARD ENGINE BEARER PLATE
FIREWALL OUTLINE
LANDING GEAR FITTING
STEEL TUBE
FUSELAGE PIANO WIRE
STEEL PLATE
ENGINE FAIRING
AFT ENGINE BEARER
FAIRING
FABRIC
LONGERON
TIE
TYPICAL FUSELAGE FRAME AFT OF ENGINE MOUNT
PIANO WIRE
TURNBUCKLE
LONGERON
STEEL TUBE AT FRONT AND REAR SPAR ONLY

FUSELAGE FRAMES

4'-11" (MAX. CHORD)
AILERON BELL CRANK
ALUMINUM COWL
BLACK LEATHER COAMING
FABRIC COVERED VERTICAL TAIL SURFACES
ELEVATOR CONTROL
FABRIC COVERED TURTLEDECK
STRINGERS
BLUE WHITE RED
2'-5"
2'-6"
3'-10"
20"
7'-3"
18"
ACCESS PLATE
PITOT TUBE
4'-0" (MAX. CHORD)
CARBURETOR AIR INDUCTION
FAIRED STEEL SPOKE WHEELS
STEP ALUMINUM FAIRING
FABRIC COVERING
FAIRING
SINGLE RUDDER CONTROL CABLE
FABRIC COVERING
ASH TAIL SKID STEEL SPRING
AIR PRESSURE RELIEF HOLE
0 1 2 3 4 5 6 7 8 9 10 11 12 13 14 15 16 17 18 19
(SCALE)

T-M S4E (OPPOSITE SIDE VIEW IS SIMILAR)

(S4E FUSELAGE TRUSS SIMILAR TO S4C)
(ENTIRE AIRPLANE FINISHED IN OLIVE DRAB EXCEPT RUDDER)

THOMAS-MORSE

THOMAS-MORSE S4E	
THE INITIAL DESIGN OF THIS AIRPLANE STARTED MAY 1918. THIS PLANE WAS PRODUCED TOO LATE FOR W.W.I. TRAINING.	
NO PROVISIONS WERE MADE FOR MACHINE GUN ARMAMENT.	
THE UPPER WING WAS CONSTRUCTED IN ONE PIECE.	
THE LE RHONE TYPE C-9 ENGINE WAS INSTALLED. A RATED 80 H.P. AT 1275 R.P.M. DEVELOPED A HIGH SPEED OF 105 M.P.H. AND A CLIMB OF 8500 FT. IN 10 MINUTES.	
THE BREAKDOWN OF WEIGHTS IS AS FOLLOWS:	
WING STRUCTURE	125 LBS.
FUSELAGE	205 "
EMPENNAGE	25 "
ENGINE INST.	340 "
PILOT	180 "
MISCELLANEOUS	70 "
	1135 LBS LOADED

6'-0"
SOLID ROUTED FIR WING SPAR
PIANO WIRE TRAILING EDGE
NORMAL RANGE OF ELEVATOR MOVEMENT
FIXED HORIZONTAL STABILIZER
CARBURETOR AIR INDUCTION
AILERON BELLCRANK
SEAT CUSHION
JOY STICK (STEEL)
INSTRUMENT PANEL CONSISTED OF: ALTIMETER, AIRSPEED INDICATOR, TACHOMETER, FUEL PRESSURE GAUGE, IGNITION SWITCH.
HAND FUEL PUMP
FIRE EXTINGUISHER
3'-2"

S4E (PLAN)

PIANO WIRE BRACE
ELEVATOR CONTROL
MAHOGANY RIB
FABRIC COVERING
6'-4"
4'-2"
2'-5"
2'-3"
2'-9"
FILLET
FABRIC COVERING
STEEL WIRE TRAILING EDGE
TAPED AND SEWED RIB ATTACHMENT
MAHOGANY PLYWOOD WING RIB
ROUTED FIR WING SPARS
AILERON TORQUE TUBE
CONVENTIONAL TYPE AILERON
FORMER RIBS
EQUAL RIB SPACING
CABLE BRACE
STRUT
STRUT POINT
FRONT SPAR
REAR SPAR
1'-9"
EQUAL RIB SPACING
2'-4"

THOMAS-MORSE MODEL S4E
THIS AIRPLANE WAS BUILT IN AUGUST, 1918, AS AN EXPERIMENTAL PROJECT. IT WAS NOT PROCURED IN QUANTITY. A SINGLE PLANE OF THIS TYPE SURVIVED IN POST W.W.I. AND WAS MODIFIED TO TAKE A CURTISS K-6 150 H.P. WATER-COOLED ENGINE AND WAS FLOWN IN AIR SHOWS. THE S4E WAS THE ONLY TAPERED WING BIPLANE BUILT IN THE U.S.A. DURING W.W.I. THE FUSELAGE TYPE, LANDING GEAR, AND ENGINE INSTALLATION WERE SIMILAR TO THE TYPE S4C. THE ELEVATORS WERE OPERATED BY A PUSH-PULL TUBE. RUDDER CONTROLS WERE CABLE OPERATED. INTERNAL WING DRAG BRACING CONSISTED OF STEEL TIE RODS. FUSELAGE STRUCTURE WAS OF ASH BRACED WITH PIANO WIRE. THE FUEL CAPACITY WAS 27 GALLONS AND 6 GALLONS CASTOR OIL. THE STRUCTURE HAD A LOAD FACTOR OF 7. THE ENDURANCE AT CRUISING SPEED WAS 2.5 HOURS.

ONE PIECE ALUMINUM COWL
LE RHONE C-9 ENGINE
AILERON PUSH-PULL TUBE
2.5° ANGLE OF INCIDENCE
1.3° DIHEDRAL ANGLE
R.A.F. 15 AIRFOIL
22'-6"
DOUBLE CABLE LIFT BRACING
TIE
HOLLOW FIR STRUTS STREAMLINE SECTION
GAP 4'-0"
SINGLE CABLE LANDING BRACING
2.5° ANGLE OF INCIDENCE
7'-3"
7'-6" PROPELLER DIA.
6.7' PITCH
WALNUT LAMINATED PROPELLER
HIGH PRESSURE 27 X 3.5 TIRES
2.5° DIHEDRAL ANGLE
S4E
SPLIT SPREADER BAR
20'-0"
4'-6"
RUBBER CHORD SHOCK ABSORBERS

(SHEET NO. 4)

(DRAWN BY WILLIS L. NYE FOR MODEL AIRPLANE NEWS)

Wright Brothers

drawings by WILLIAM WYLAM

1903 Flyer, Model A, Model B

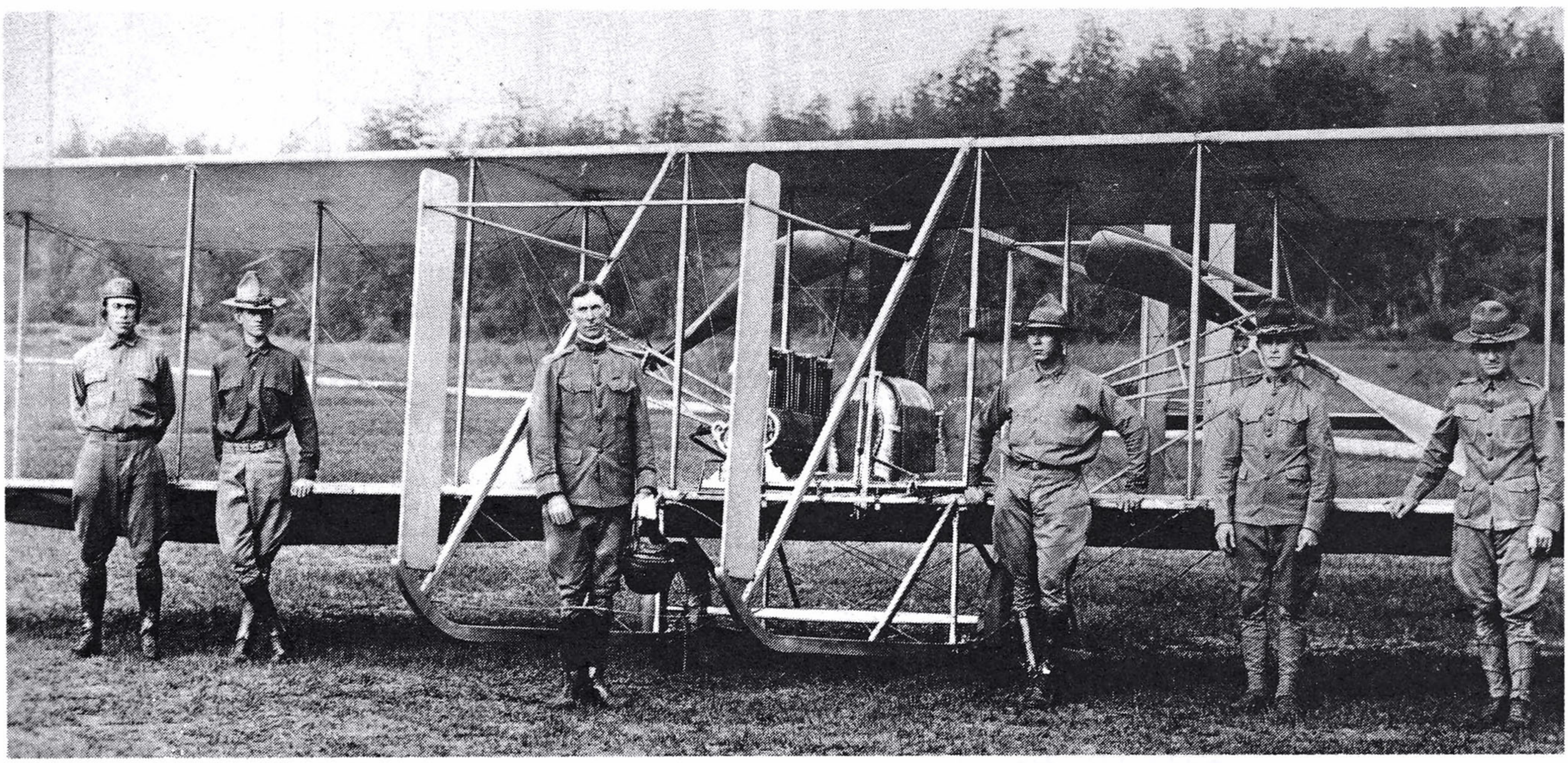

The Wright Brothers airplane was the first man-carrying aircraft in which the Army Signal Corp expressed an interest. Air Age file photo.

AT 10:35 a.m. on Thursday, December 17, 1903, at Kill Devil Hills in Kitty Hawk, North Carolina, Orville Wright piloted the Flyer on a flight that lasted just 12 seconds and covered about 120 feet. In doing so, the world's first powered, sustained, and controllable flight of a man-carrying airplane was recorded. The 12-hp engine and airframe were of Orville and Wilbur Wright's design and manufacture. The fourth and last flight that day—and of the Flyer ever—covered over 800 feet.

The use of wing warping, and the connection between it and the rudders, was the secret of the Flyer's controllability—the Wright's secret.

Not satisfied, the brothers set about modifying their design and thus developed the Wright Model A.

The Model A was similar to the original Flyer, the most noticeable difference being the addition of seats for pilot and passenger. This airplane paved the way for the Model B, which was accepted as a flying machine for the Army Signal Corps.

The 1903 Flyer has just been restored at the National Air & Space Museum in Washington, DC; seven other powered Wrights are on exhibit in various museums. □

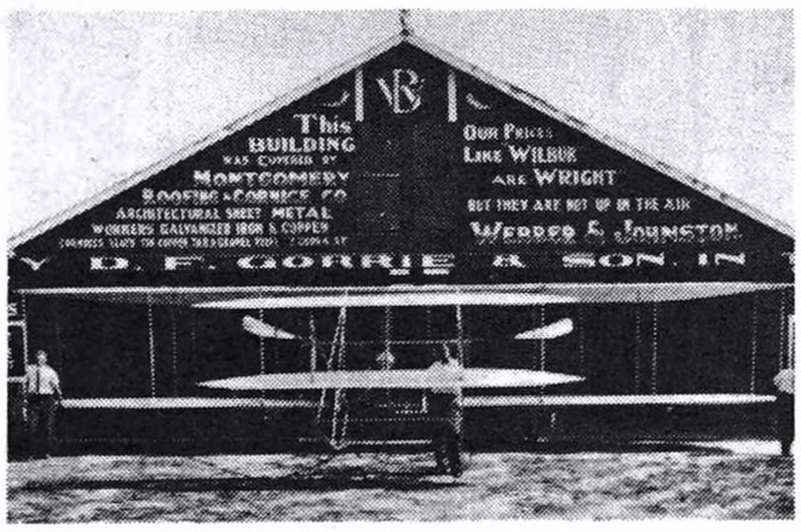

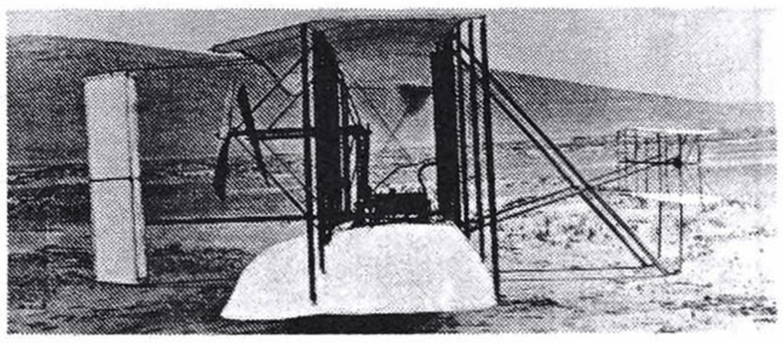

Left: The Wright Brothers assembled their famous aircraft with little fanfare in this building. Smithsonian photo. Above: Side view of the original Wright airplane, 1903, at Kitty Hawk. Photo courtesy of Leonard Opdycke, WW I Aeroplanes.

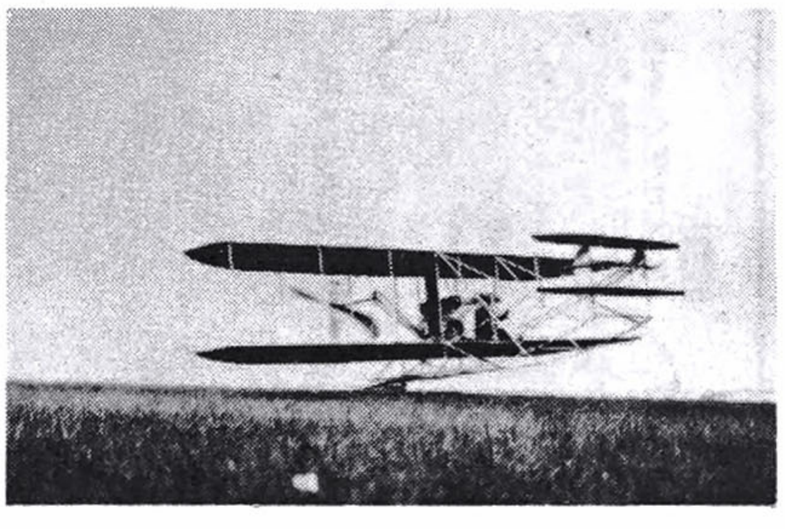

NOTES:
THE CENTER PANELS, FROM ℄ AIRPLANE OUT TO SECOND STRUTS (WHERE PULLEIES ARE) ARE SOLIDLY BRACED. FROM THE SECOND STRUTS, THE REAR SPARS ARE HINGED TO OBTAIN THE WARPING EFFECT. THE TWO OUTER INTERPLANE STRUTS ARE NOT CROSS-BRACED (WIRES "A") & REAR CROSS-BRACED WIRES ARE DIFFERENT THAN THOSE IN FRONT. ENTIRE FRONT OF PLANES ARE RIGID INCLUDING ALL RIBS.

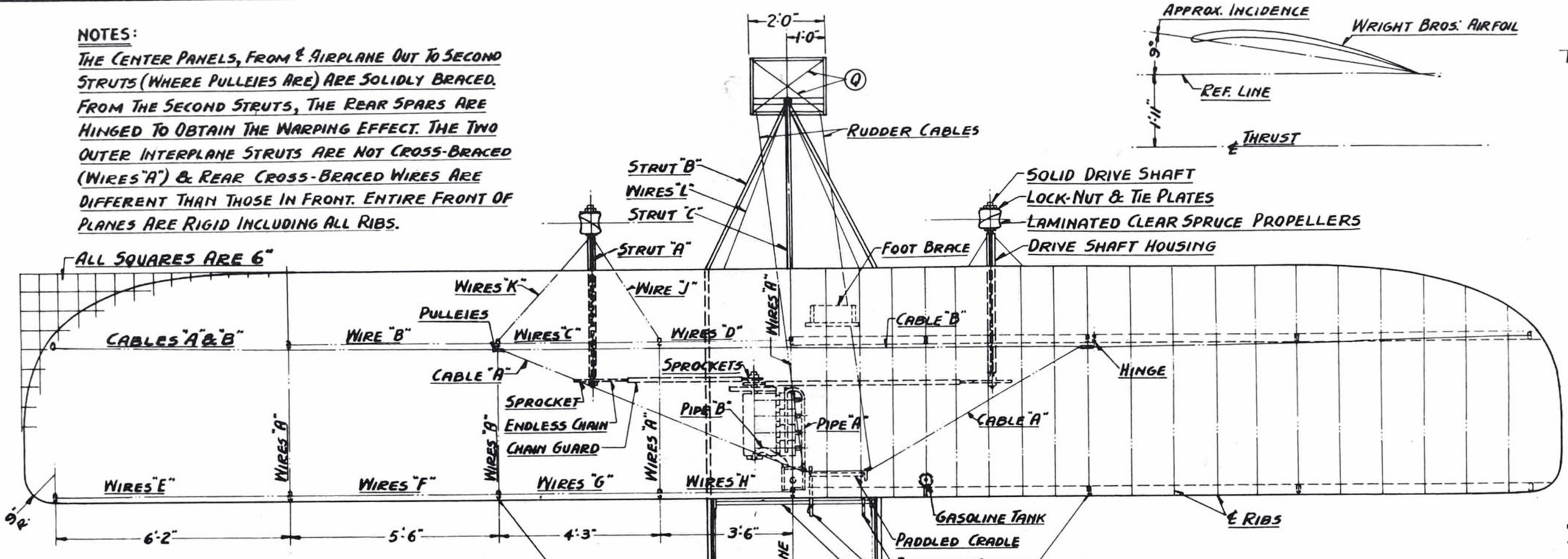

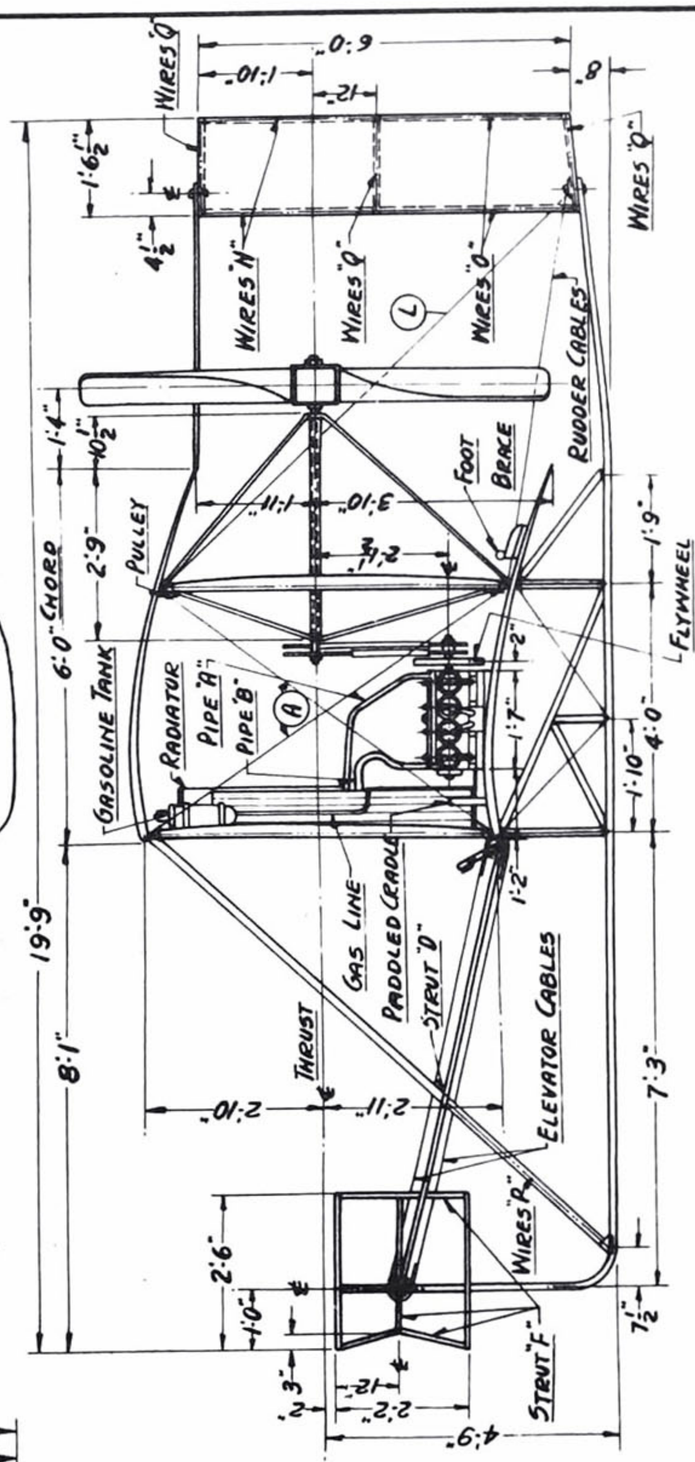

NOTES:
ALL RIBS, SPARS, STRUTS & FRAME ARE OF SPRUCE & ASH CONSTRUCTIONS.
ALL PLANE SURFACES, BOTH TOP & UNDERNEATH, ARE COVERED BY FINE DUCK CANVAS.
ALL BRACING & FLYING WIRES ARE STEEL.
ALL EXPOSED PARTS OF MACHINE ARE PAINTED ALUMINUM.
ALL WIRE & STRUT FITTINGS ARE STEEL.

NOTES:
WARPING THE WINGS' OUTER REAR CORNERS THRU CABLES "A" & "B", CONTROLS THE LATERAL BALANCE. TILTING THE ELEVATOR PLANES THRU ELEVATOR CABLES, CONTROLS THE CLIMB OR DESCEND OPERATIONS. TURNING THE RUDDER IS THRU WARPING CONTROL; RUDDER CAN ALSO BE TURNED WITHOUT WARPING WINGS.

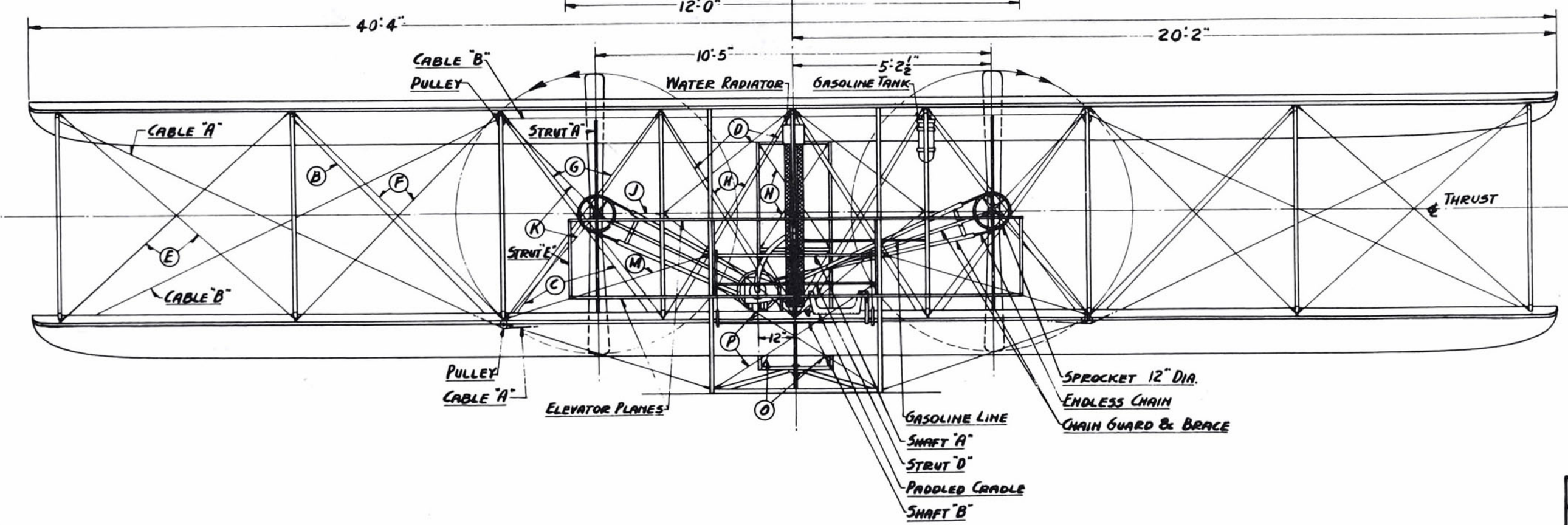

NOTES:
ENGINE IS 4 CYLINDER WATER COOLED & MADE BY WRIGHT BROTHERS. IT IS RATED 16 H.P. @ 400 R.P.M. IT IS MOUNTED ON THE SIDE & IT DRIVES TWO PROPELLERS IN OPPOSITE DIRECTIONS.

SCALE: 3/16" = 1'-0"	GENERAL ARRANGEMENT WRIGHT BROTHERS' ORIGINAL "FLIER"
DATE: Nov. 1943	
DRAWN BY... W.A.WYLAM	

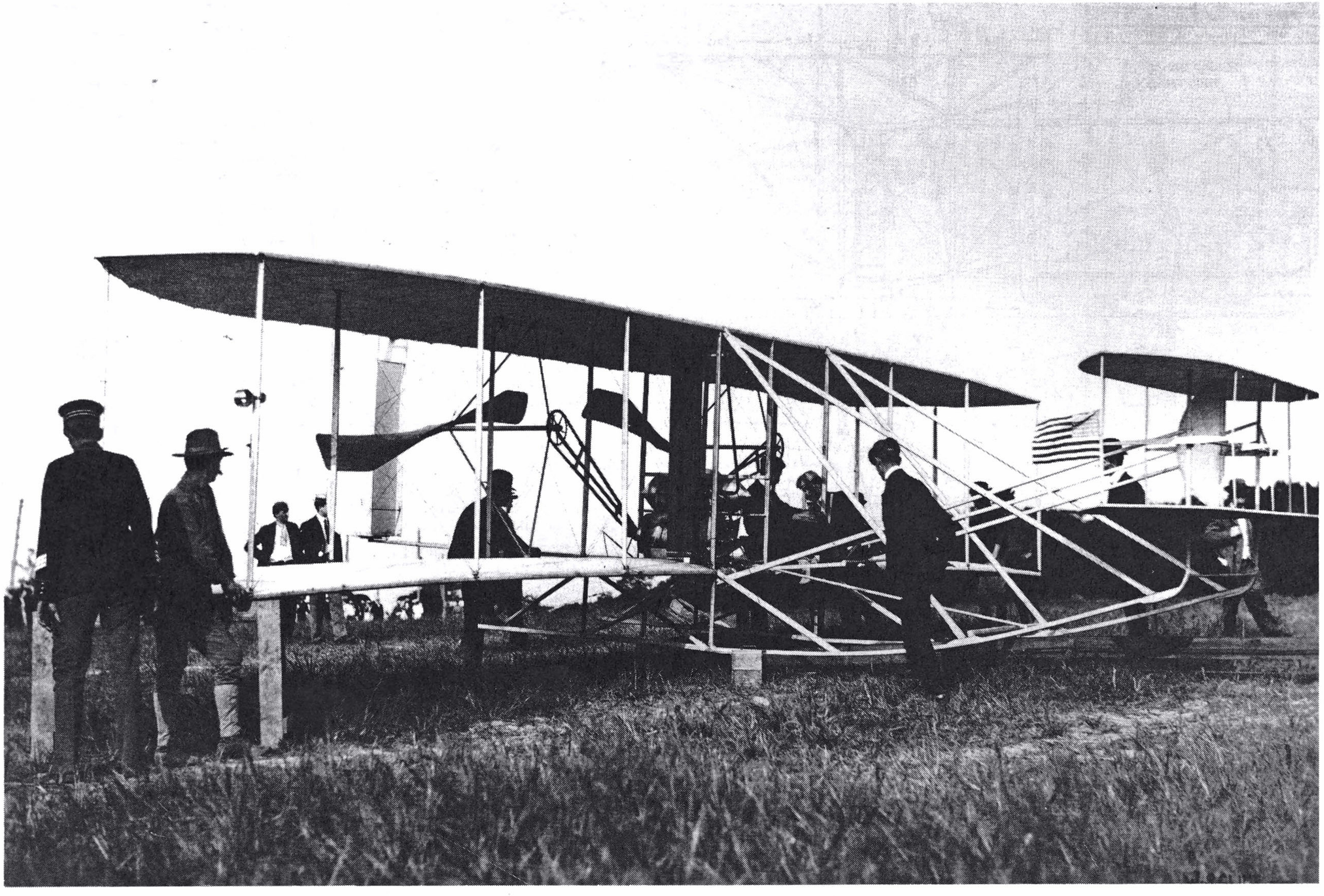

Wright Brothers 1908 Military. Orville Wright leaning over pilot's seat. Photo courtesy of the Smithsonian Institution.

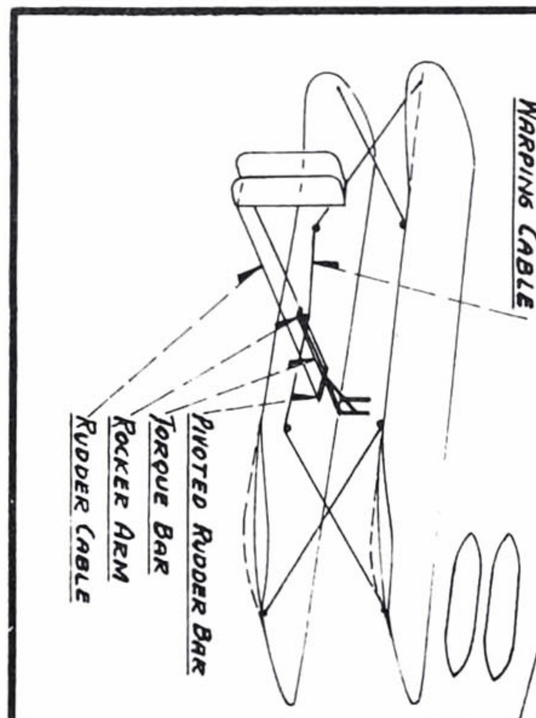

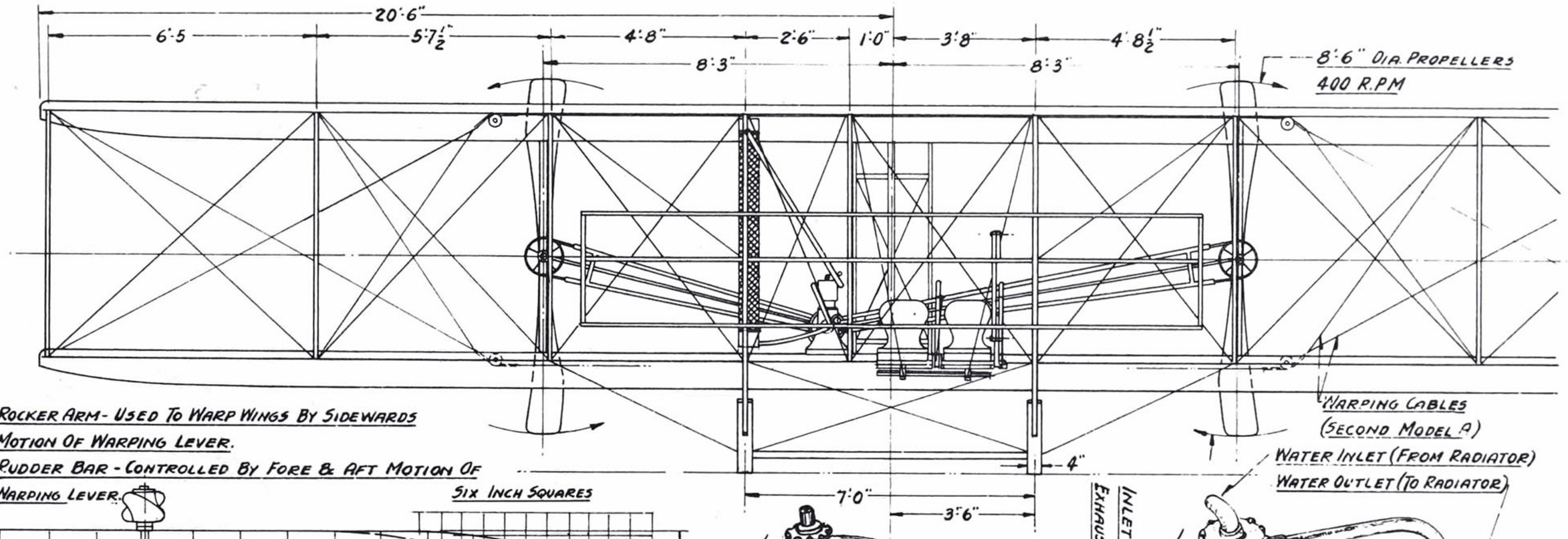

ROCKER ARM - USED TO WARP WINGS BY SIDEWARDS MOTION OF WARPING LEVER.

RUDDER BAR - CONTROLLED BY FORE & AFT MOTION OF WARPING LEVER.

SIX INCH SQUARES

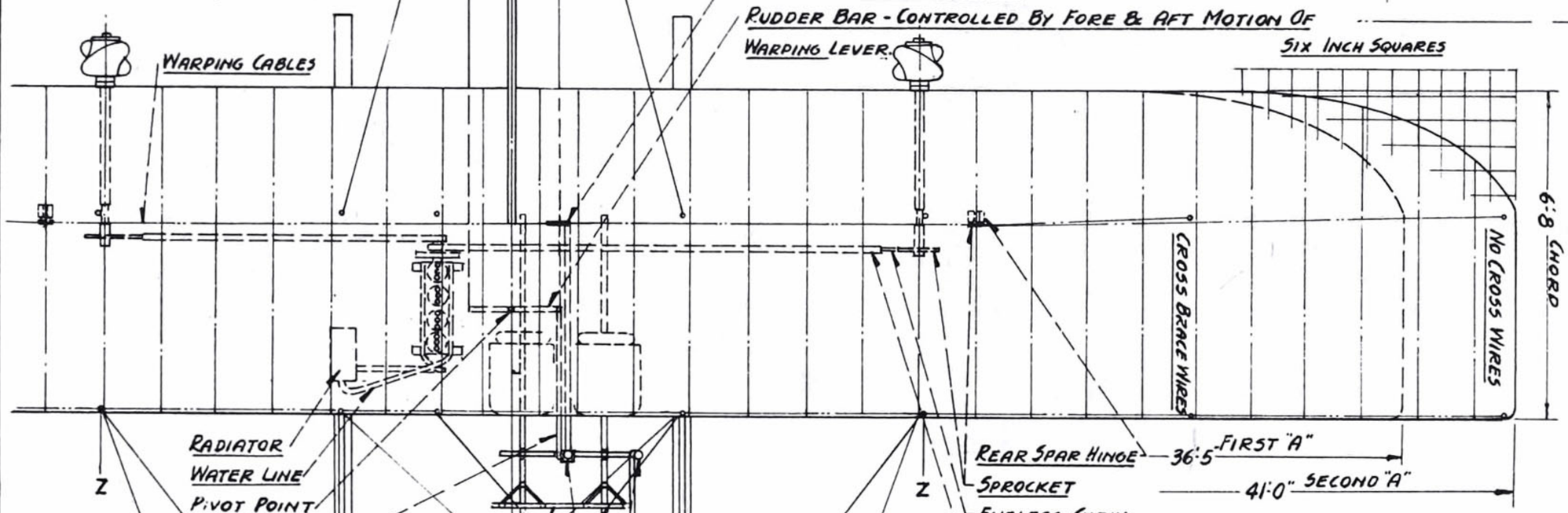

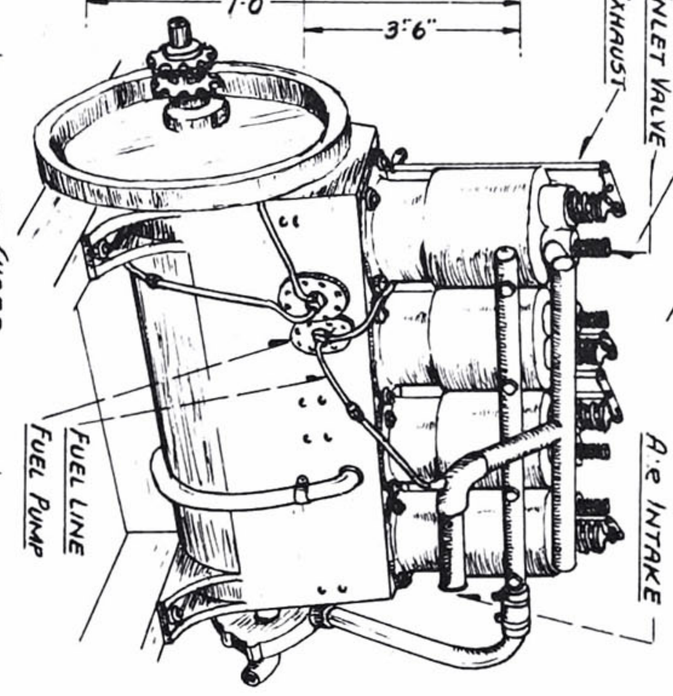

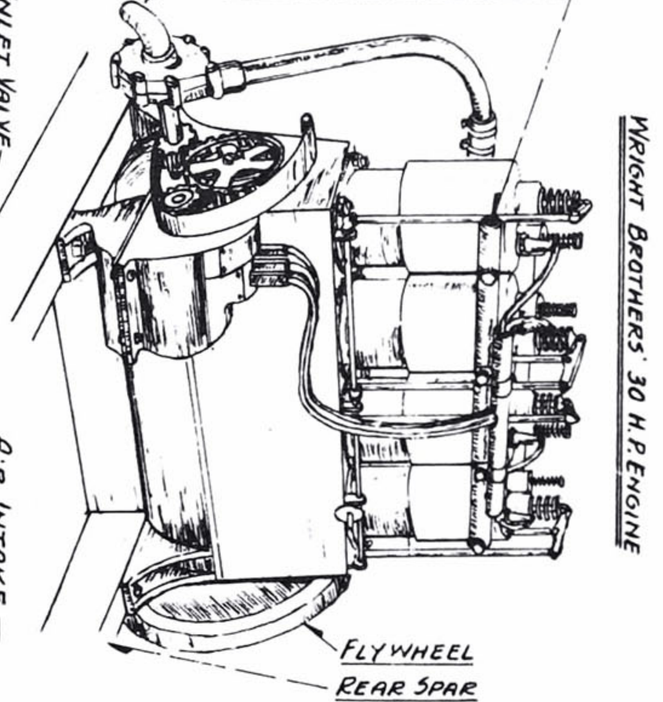

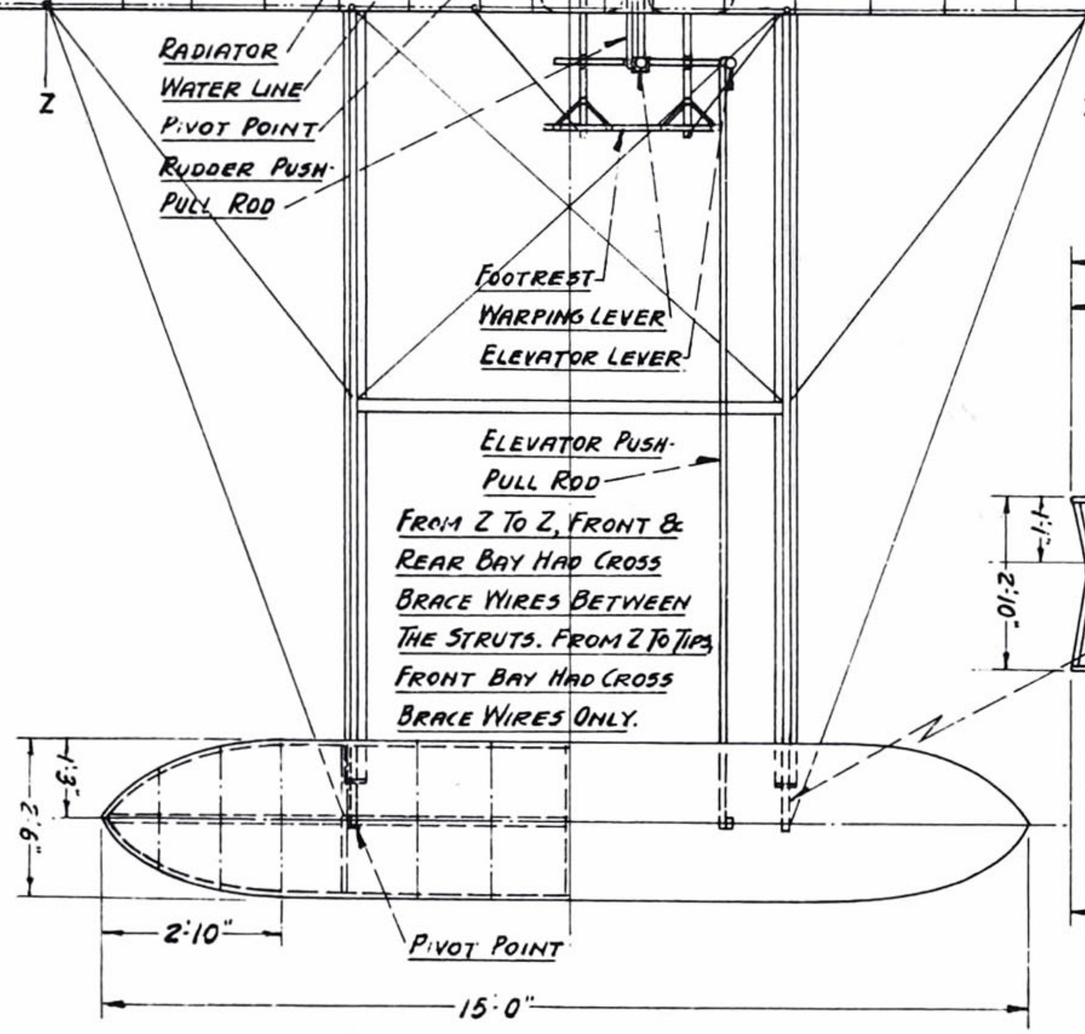

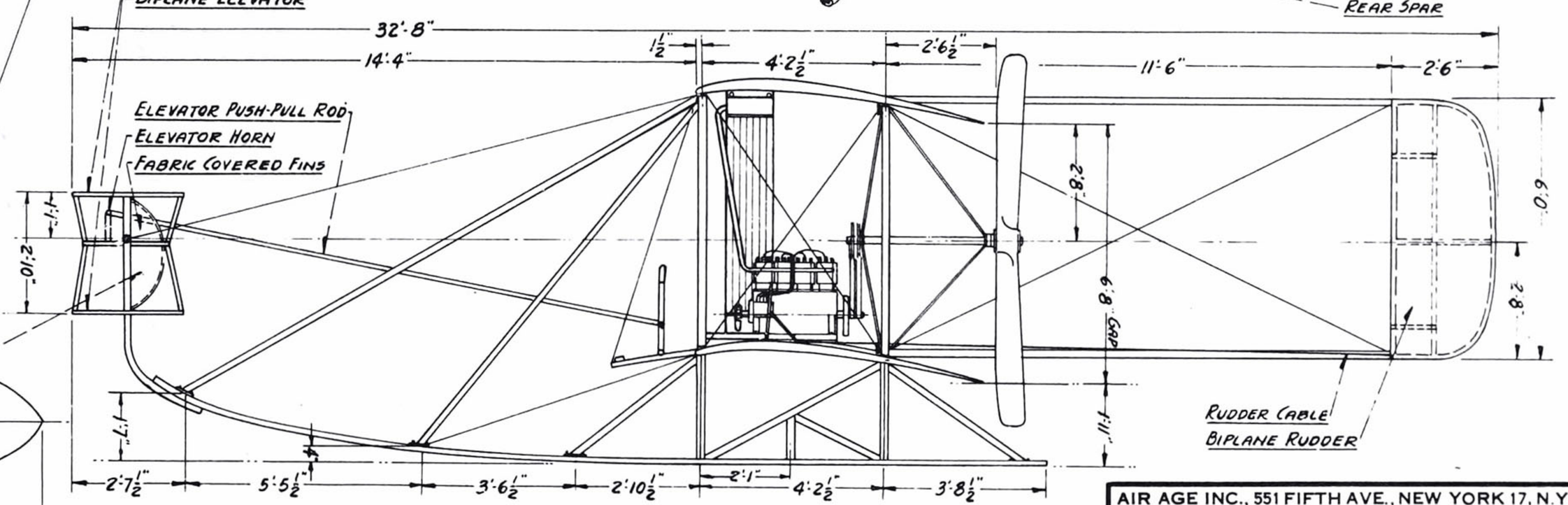

HISTORICAL NOTES:

THIS WAS THE FIRST AIRPLANE SUBMITTED TO THE U.S. ARMY FOR FLIGHT TESTS AT FORT MEYERS, VIRGINIA. THIS MACHINE CRASHED ON SEPTEMBER 17, 1908 WHICH KILLED LT. THOMAS SELFRIDGE. SELFRIDGE ARMY FIELD, MICHIGAN WAS NAMED IN HIS HONOR.

AIR AGE INC., 551 FIFTH AVE., NEW YORK 17, N.Y.	
SCALE: 3/16 • 1'-0"	GENERAL ARRANGEMENTS
DATE:	WRIGHT BROTHERS-U.S. ARMY
DRAWN BY ... W. A. WYLAM	MODEL A

AIR AGE INC., 551 FIFTH AVE., NEW YORK 17, N.Y.

GENERAL ARRANGEMENTS
WRIGHT BROTHERS U.S.A. No. 1
MODEL B

SCALE: 3/16" = 1'0"

DATE:

DRAWN BY .... W.A.WYLAM

29'5"
7'4½" 3'11½" 7'9½" 7'5" 2'10½"
3" 1'9" 2" 3'10½" 3" 1'6" 6" 4½"
2'4" 1'3½" 5'4½" 2'5" 1'5" 1'5" 5'4" 2'0½" 1'4½" 2'6½" 3'2"
2'0" 3'4" 5'4 Gap 1'8½" 5'0" 2'7½" 5'5" 2'9"

ELEVATOR CONTROL CABLES
RUDDER CONTROL CABLES
ELEVATOR CABLE CHAIN
ELEVATOR BRACE WIRES
PIVOT POINT
SPROCKET
CHAIN
HINGE

No.1 "B" 4 WHEELS-2"x20"
No.3 "B" 2 WHEELS-3"x24"
No.1 "B" FABRIC COVERED
No.3 "B" FABRIC COVERED
WHEEL WASHER PLATES
FIXED STEEL BRACE
SHOCKCORD
WHEEL AXLE
PIVOT POINT

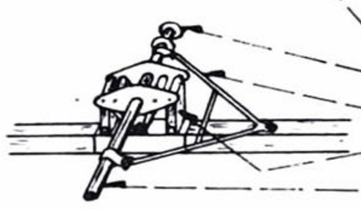

MODEL "B" WHEEL AXLE ASSEMBLY

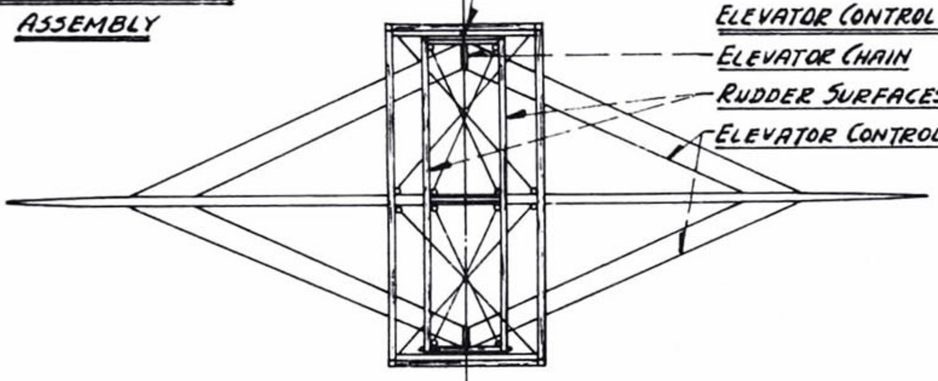

SECTION "A-A"

1'1" 1'1" 1'1"
1'0" 3'0" 1'6"
15'2"
1'4" 1'6"
3"
2'6"
11'2"

FABRIC COVERED RUDDER
BIPLANE SURFACE RUDDER
PIVOT POINT-RUDDER'S
RUDDER CONTROL CABLES
ELEVATOR CONTROL CABLES
ELEVATOR CHAIN
RUDDER SURFACES
ELEVATOR CONTROL CABLES

AUX. HAND LEVER

MAIN LEVER MOVEMENTS WERE FORWARDS & BACKWARDS; AUX. LEVER MOVEMENTS WERE SIDEWARDS.

FROM "Z TO Z", THE PANELS WERE RIGIDLY BRACED; FROM "Z" TO TIPS, THE FRONT SPAR WAS RIGIDLY BRACED (REAR SPAR WAS FLEXIBLE). BOTH WARPING & RUDDER MOVEMENTS WERE CONTROLLED SIMULTANEOUSLY BY MAIN LEVER; RUDDER MOVEMENTS FOR FLAT TURNS (WITHOUT WARPING THE WINGS) WAS CONTROLLED BY AUXILIARY HAND LEVER.

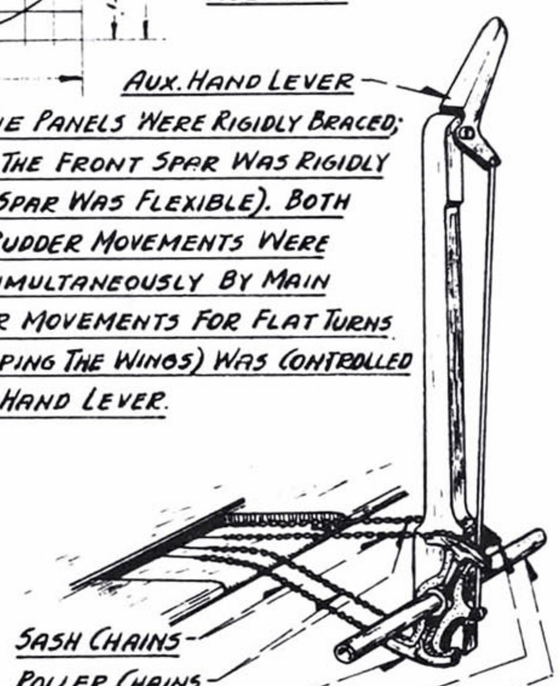

SASH CHAINS
ROLLER CHAINS
RUDDER CRANK
WARPING CRANK
TORQUE SHAFT
LAMINATED PROPELLER
SPACERS
DRIVE SHAFT HOUSING
REAR SPAR HINGE
SPROCKET (BOTH WINGS)
SPROCKET (PROPELLER)
ENDLESS CHAIN
CHAIN GUARD
DOUBLE CABLES (WARPING CONTROL)
SPROCKET
WARPING CABLES (LOWER WING)

6'6" 2'8½" 8" 8" R.
NO CROSS WIRES
CROSS WIRE BRACE
CROSS WIRE BRACE

U.S. ARMY NO. 3 WRIGHT REVISED MODEL "B"

39'0"
NO CHANGES ON REAR OUTRIGGER; MINOR CHANGES ON FRONT.
19'6"
11'3"
2'6" 2'6" 3'2" 5'8" 7'5"
6'0"

ENGINE FLY WHEEL
FUEL TANK
PROPELLER SPROCKET
WATER RADIATOR
SINGLE WHEEL AXLE

WATER RADIATOR
WATER PIPINGS
FUEL TANK
ELEVATOR CONTROL
WARPING CONTROL
ELEVATOR CONTROL
CROSS BRACE

DUAL ELEVATOR CONTROL
WARPING CONTROL
ELEVATOR CONTROL
WARPING BALANCE CABLES



WARPING CABLES
ELEVATOR CONTROL CABLES
RUDDER CONTROL CABLES

38'-6"
19'3"

FROM "Z" TO TIPS, FRONT BAY HAD CROSS-BRACE WIRES

6'8" 5'3" Z 3'5¼" 2'4½" 8" 3'0¼" 3'5¼" Z

FROM "Z-Z", FRONT & REAR BAY HAD CROSS BRACE WIRES (BETWEEN THE STRUTS).

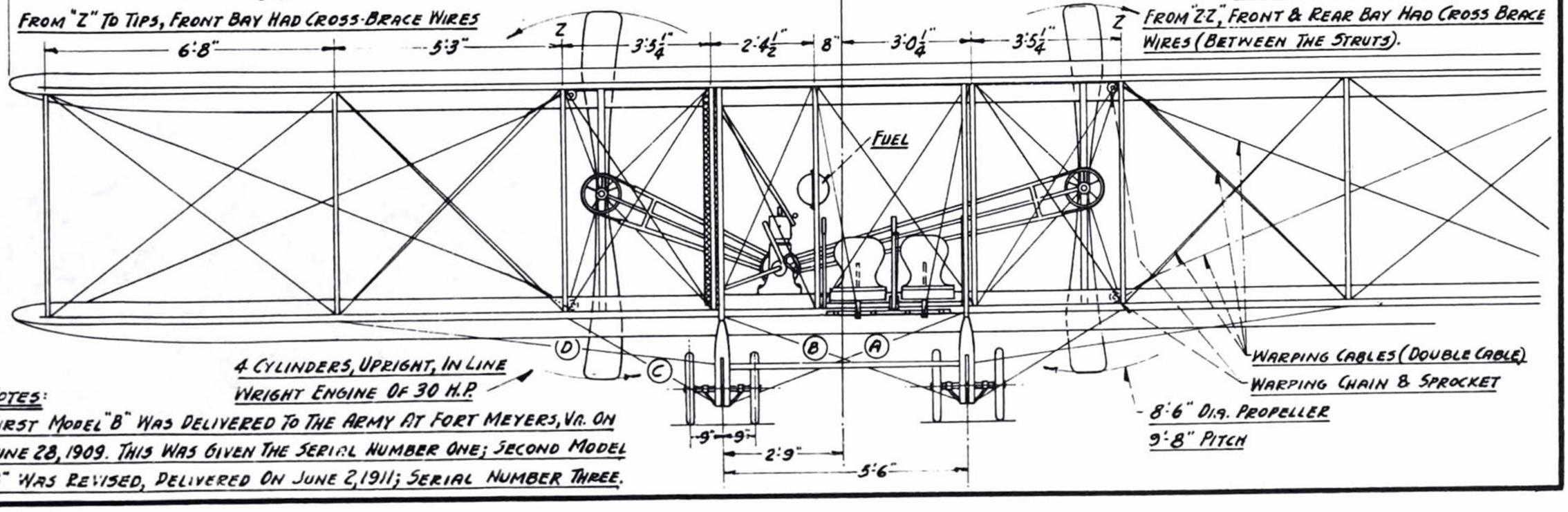

FUEL

4 CYLINDERS, UPRIGHT, IN LINE
WRIGHT ENGINE OF 30 H.P.

WARPING CABLES (DOUBLE CABLE)
WARPING CHAIN & SPROCKET

8'6" DIA. PROPELLER
9'8" PITCH

9" 9" 2'9" 5'6"

NOTES:
FIRST MODEL "B" WAS DELIVERED TO THE ARMY AT FORT MEYERS, VA. ON JUNE 28, 1909. THIS WAS GIVEN THE SERIAL NUMBER ONE; SECOND MODEL "B" WAS REVISED, DELIVERED ON JUNE 2, 1911; SERIAL NUMBER THREE.

Clerget

drawing by WILLIAM WYLAM

ONE OF THE most successful engines of WW I was the rotary Clerget. The crankshaft remained fixed during operation and the entire engine rotated around it. This feature provided a number of advantages, one being easy maintenance. Another was the relatively light weight of the engines. Produced in 7- and 9-cylinder versions, the Clerget Company also produced limited quantities of 11- and even 16-cylinder rotary engines, the latter producing as much as 420 hp at 1,600 rpm with a weight of only 750 pounds. The Type 11EB of 11-cylinder configuration weighed 507 pounds and produced 210 hp at 1,300 rpm and the Type 9BF with 9 cylinders weighed 381 pounds and put out 153 hp at 1,250 rpm, according to *Jane's All the World's Aircraft* of 1919.

Manufactured in France by Clerget Blin Et Cie, it was also manufactured under a license agreement by Gwynnes Ltd. of London and was used in many different Allied aircraft, such as the Sopwith Camel, Beardmore, and others.

The rotary engine was little-used after WW I. Following the development of more powerful, liquid-cooled, rotating crankshaft style engines by Mercedes, Rolls Royce, Liberty, and Hispano-Suiza, the rotary engine became obsolete and production halted around 1925. A few were rebuilt as stationary radial engines after the war. □

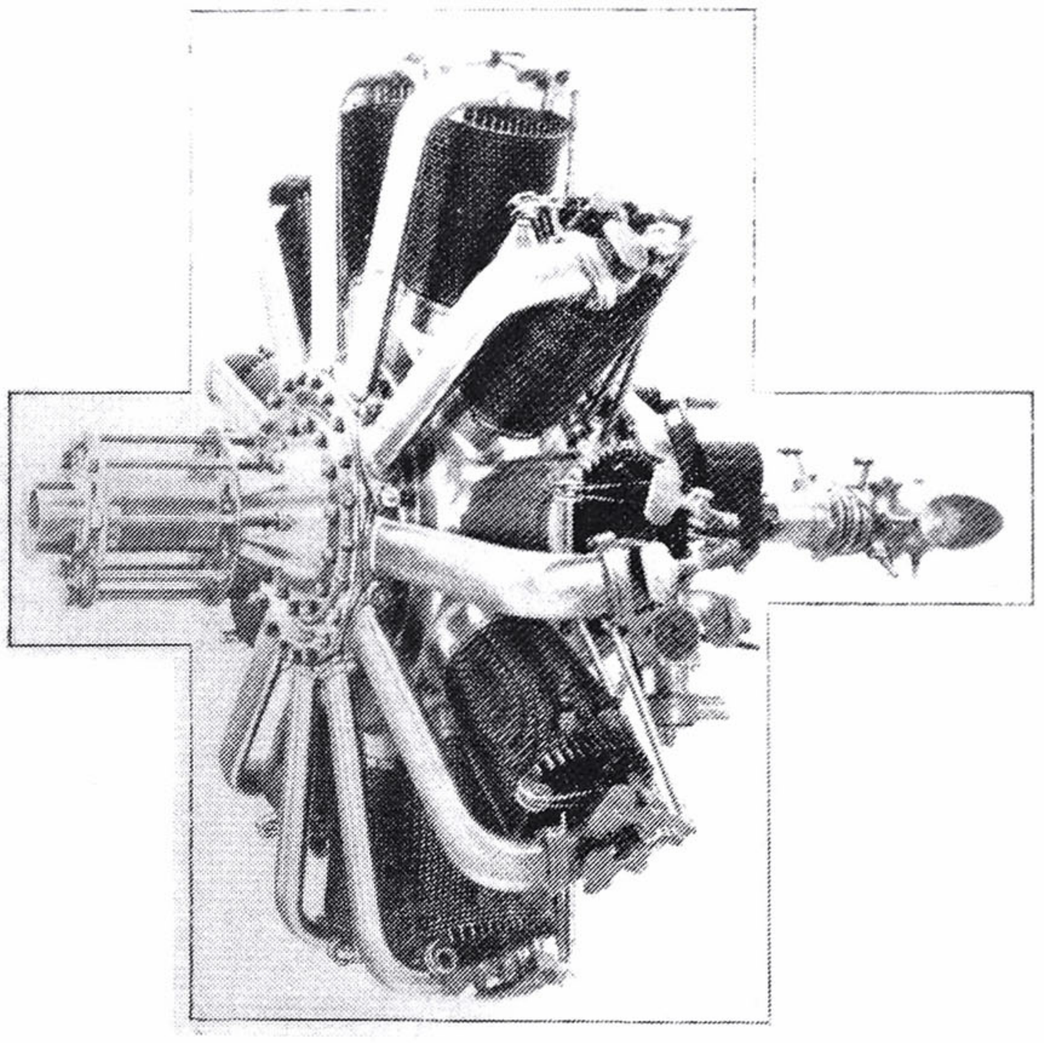

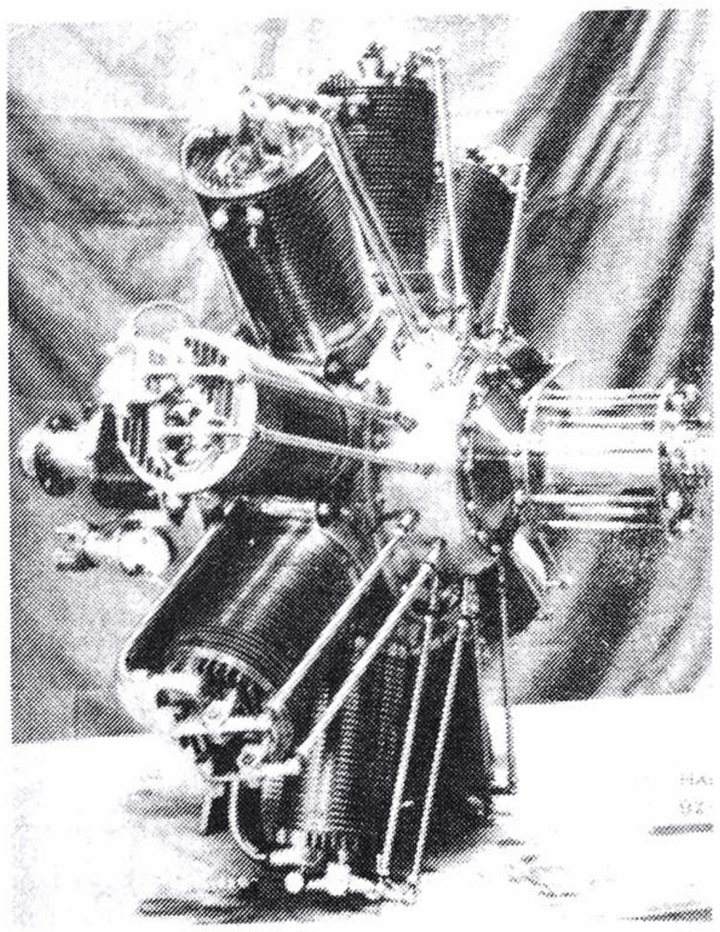

Above: Type 11E.B. developed 200 hp at 1,300 rpm. Left: Type 9Z. was rated at 110 hp at 1,180 rpm.

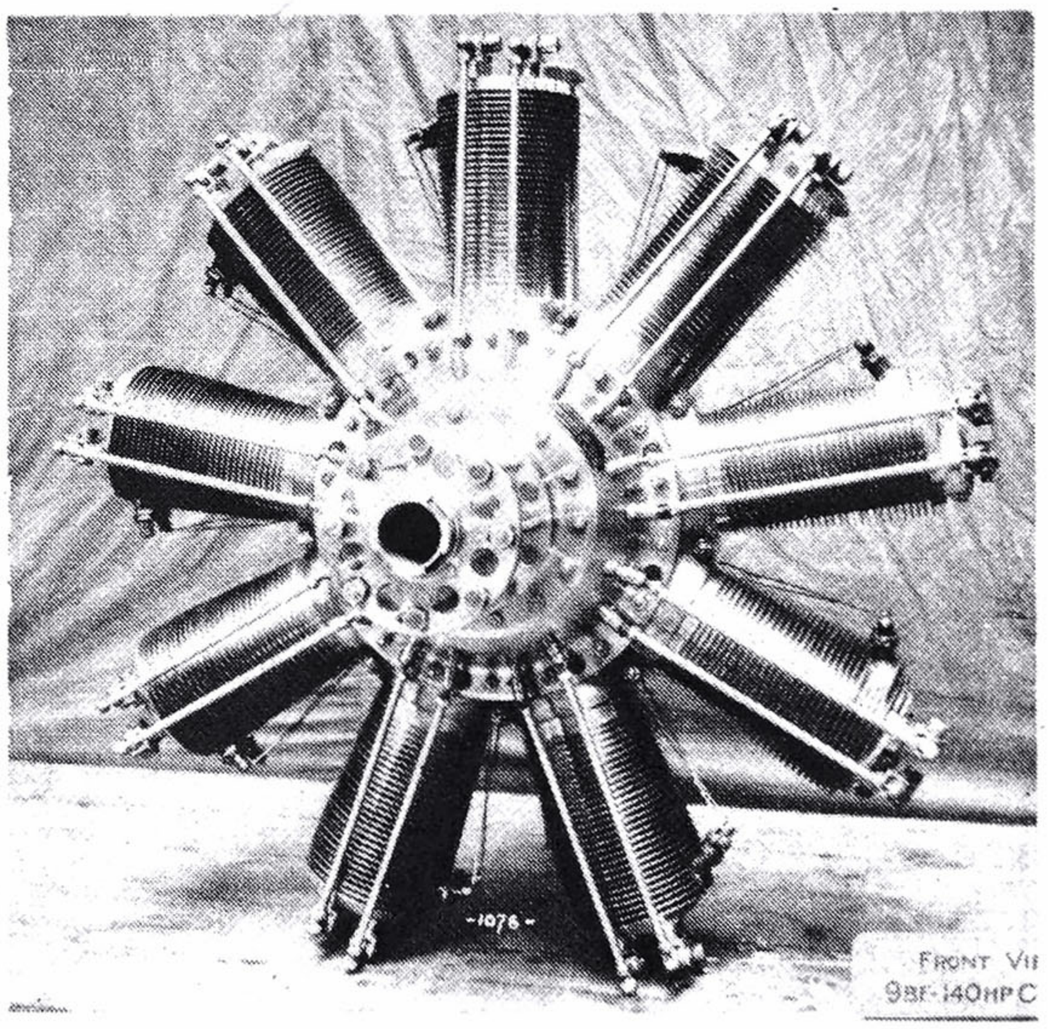

The Type 9B.F. weighed 381 pounds and developed 140 hp at 1,250 rpm.

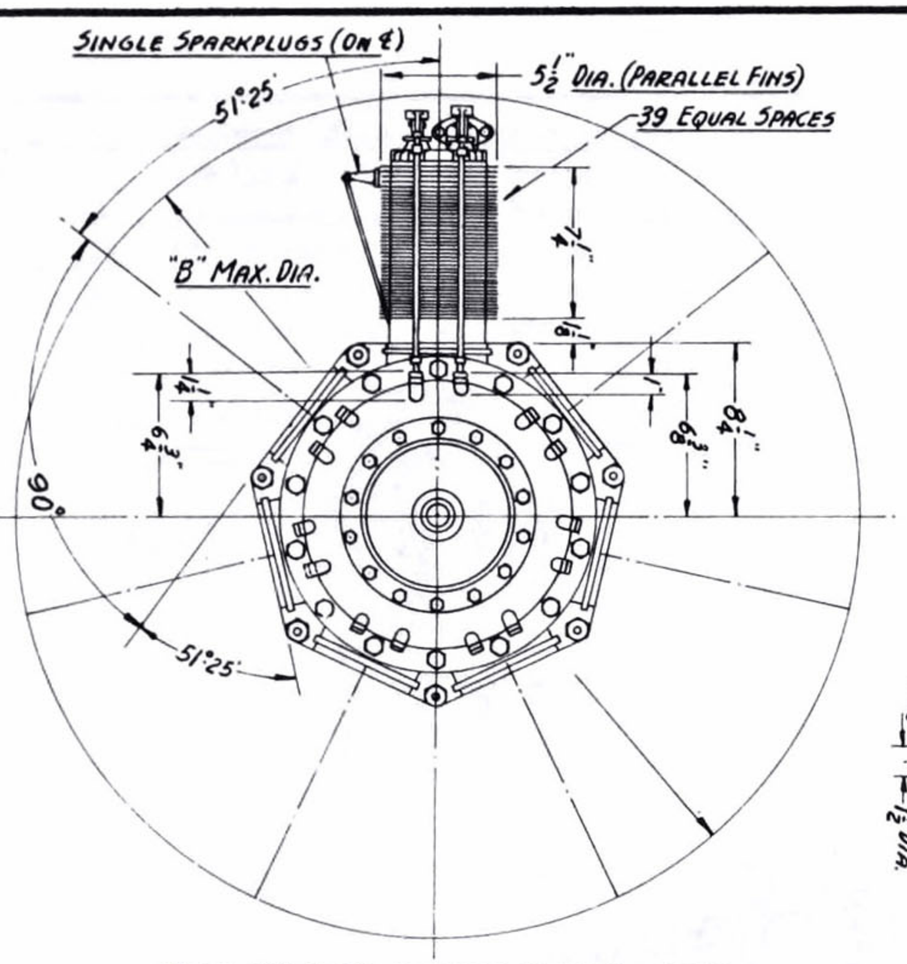

MODEL 7Y, & 7Z CLERGET-SEVEN CYLINDERS

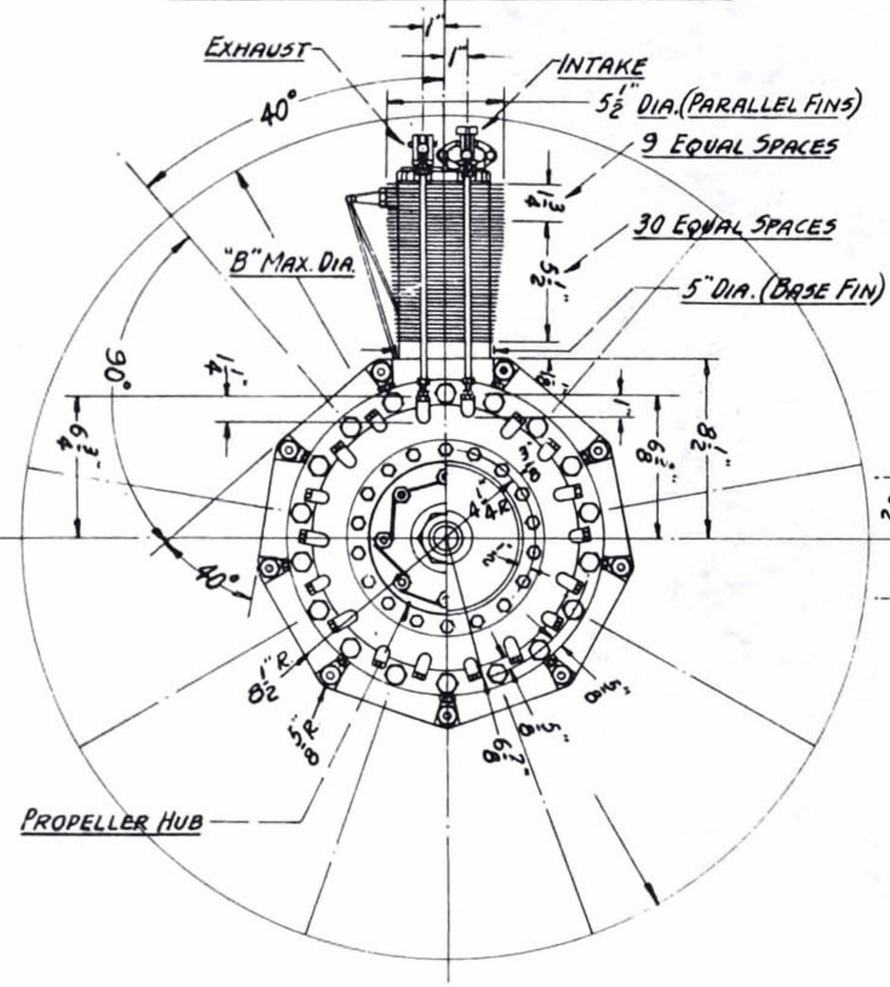

MODEL 9Y, 9Z, 9B, 9F, & 9BF CLERGET NINE CYLINDERS
(MODEL 9Y HAD SAME FINS ON CYLINDERS AS 7Y)

NOTES:
CYLINDER DIMENSIONS & OTHER MAIN DIMENSIONS ARE THOSE OF THE POPULAR 130 H.P. VERSION. OTHER VERSIONS HAD MINOR ALTERATIONS ON DIMENSIONS, DESIGN, AND PLACEMENT OF THE FIXED REAR ACCESSORIES. SOME VERSIONS OF THE SAME MODEL HAD VARIATIONS ON THE REAR ACCESSORIES ARRANGEMENT—THAT IS—SOME 9B'S HAD SHORTER LENGTHS THAN THE STANDARD 9B'S "A" LENGTH.

NOTES ON SECTIONAL DRAWINGS:
THE HEAVY BLACK OUTLINES ARE THOSE OF THE ASSEMBLY WHICH ROTATES ON THE FIXED HOLLOWED CRANKSHAFT. THE CRANKCASE WAS MOUNTED ON FRONT & REAR BALL BEARINGS; THE CRANKSHAFT WAS FIXED TO THE AIRFRAME AT THE DRUM AND THE REAR SUPPORT.
THE ECCENTRIC SHAFT PROVIDES THE CAM MOVEMENTS. THE GAS VAPOR ENTERS THE CRANKCASE THRU THE HOLLOWED CRANKSHAFT; IT ENTERS THE CYLINDERS THRU THE INDUCTION PIPES. THE EXHAUST WAS EJECTED INTO THE ATMOSPHERE AT THE EXHAUST PORTS.
THE HIGH TENSION BRUSH RUBS ON THE DISTRIBUTOR DISC; THE PLUG WIRES WERE FIXED TO THE DISTRIBUTOR DISC, PASS THRU THE INSULATED HOLDERS TO THE SPARKPLUGS; FIRING ORDER WAS EVERY OTHER CYLINDER.

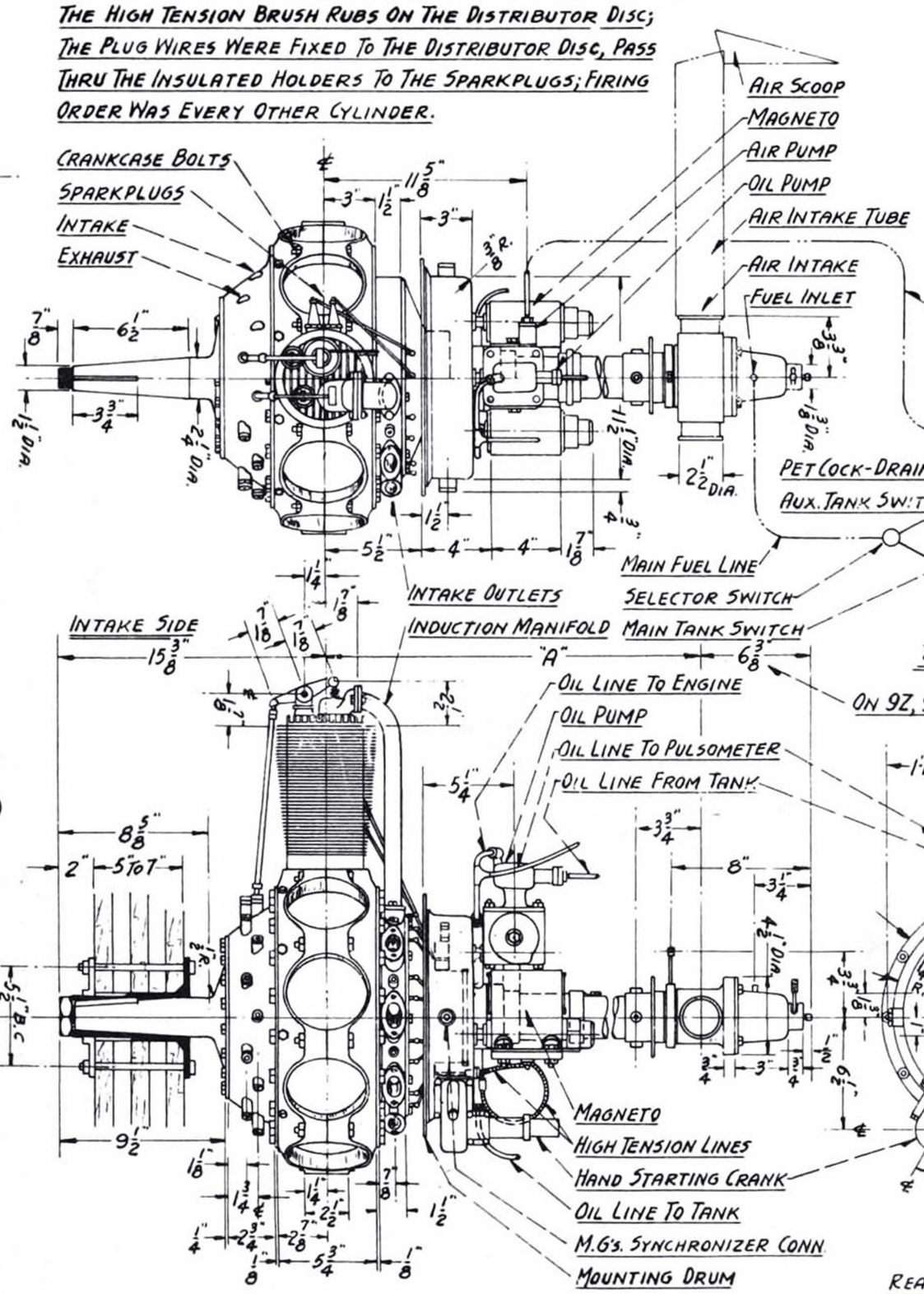

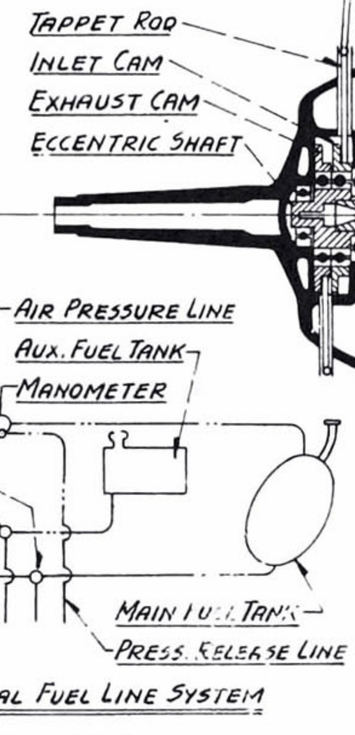

TYPICAL FUEL LINE SYSTEM

REAR VIEW OF ACCESSORIES

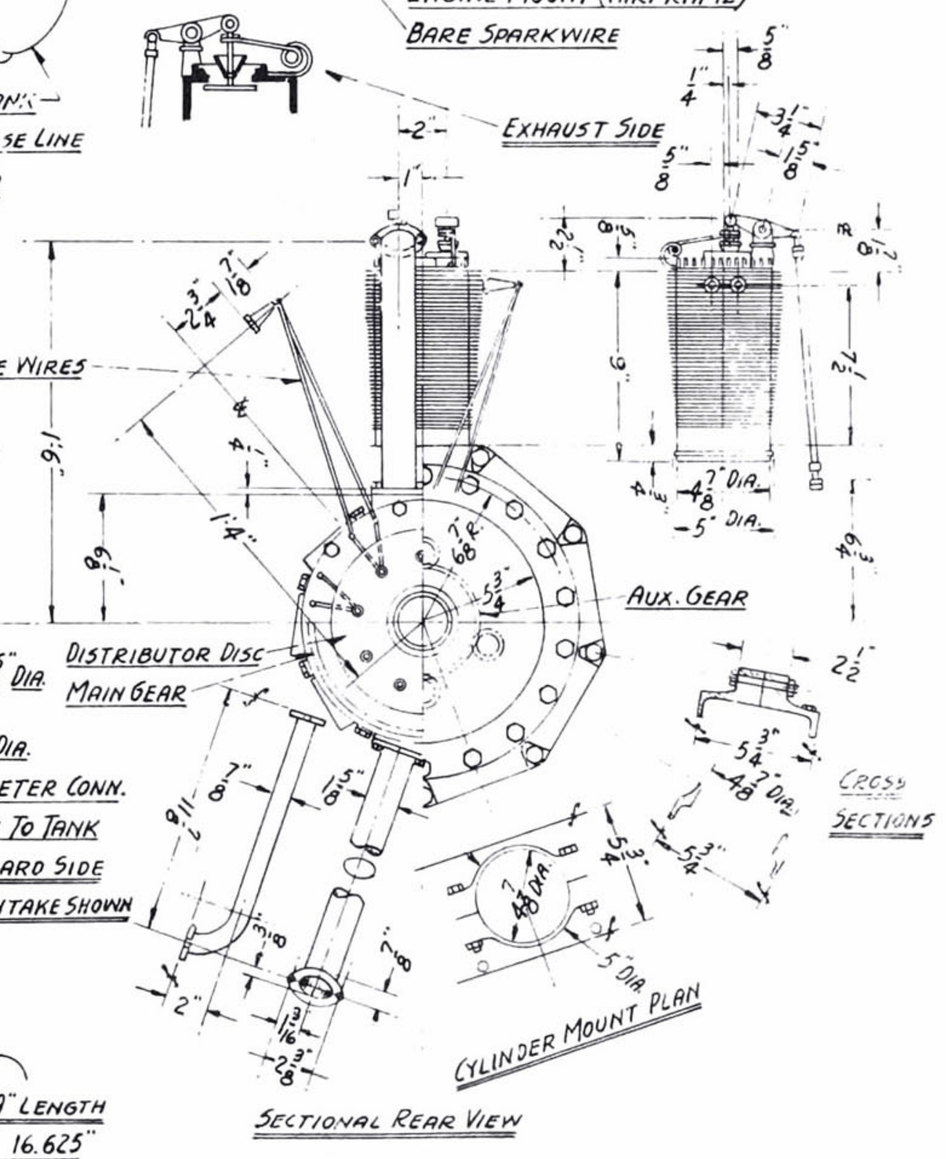

SECTIONAL REAR VIEW

THANKS TO GLENN D. ANGLE; REF: "AEROSPHERE OF 1939"

MODEL	H.P. @	R.P.M.	BORE	STROKE	FUEL RATE	WEIGHT	WEIGHT/H.P.	CLERGET HANDBOOK "B" MAX. DIA.	CLERGET HANDBOOK "A" LENGTH
7Y	60	1200	4.72"	4.72"	.63 LBS/HOUR	198 LBS.	3.3 LBS.	35.5"	16.625"
7Z	85	1200	4.72	5.91	.665	216	2.7	36.25	16.625
9Y	110	1200	4.72	5.91	.675	395	3.6	36.25	20.625
9Z	121	1200	4.72	6.3	.79	367	3.03	40.25	27.625
9B	130	1250	4.72	6.3	.665	381	2.93	40.25	28.0
9F	200	1325	4.72	6.69	.687	374	1.87	40.25	29.25
9BF	140	1250	4.72	6.77	.656	381	2.72	40.25	28.0
9J	100	1300	4.13	5.51	.156	250	2.5	36.25	20.625

AIR AGE INC., 551 FIFTH AVE., NEW YORK 17, N.Y.
SCALE: 3/4" = 1'0"
TYPE: ROTARY
COPYRIGHT 1947
WILLIAM A. WYLAM
GENERAL ARRANGEMENTS
FRENCH AIRCOOLED ENGINE
CLERGET
BUILT 1915-18 BY CLERGET, BLIN & CIE, PARIS, FRANCE

Hispano-Suiza

drawings by WILLIAM WYLAM

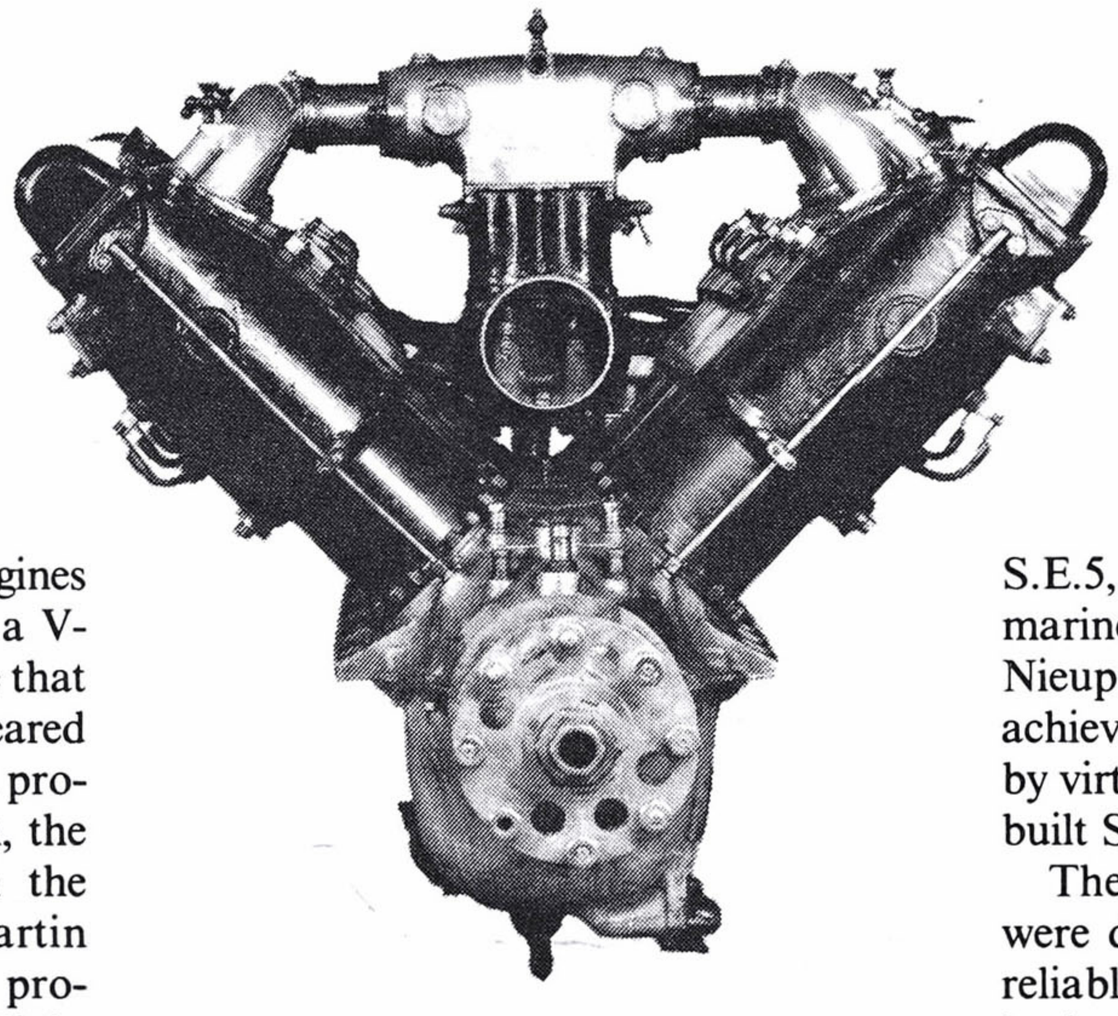

ONE OF THE MOST successful engines of its time, the Hispano-Suiza was a V-type 8 cylinder, liquid-cooled engine that was produced in both direct and geared drive configurations. With the main production facility in Barcelona, Spain, the engine was also manufactured in the United States by the Wright-Martin Company and versions were also produced in France and England. Eight models were made with the M version producing as much as 400 hp. Used in such aircraft as the British Beardmore, S.E.5, Sage, Sopwith Dolphin, Supermarine, the French-built DeMarcay, and Nieuport variants, the engine probably achieved more recognition than any other by virtue of its use in the famous French-built Spad fighter plane.

The Hispano-Suiza engines, which were developed as early as 1916, had a reliable design and provided a sound basis for the company which is still in business producing jet engines under the name of SNECMA in Paris, France. □

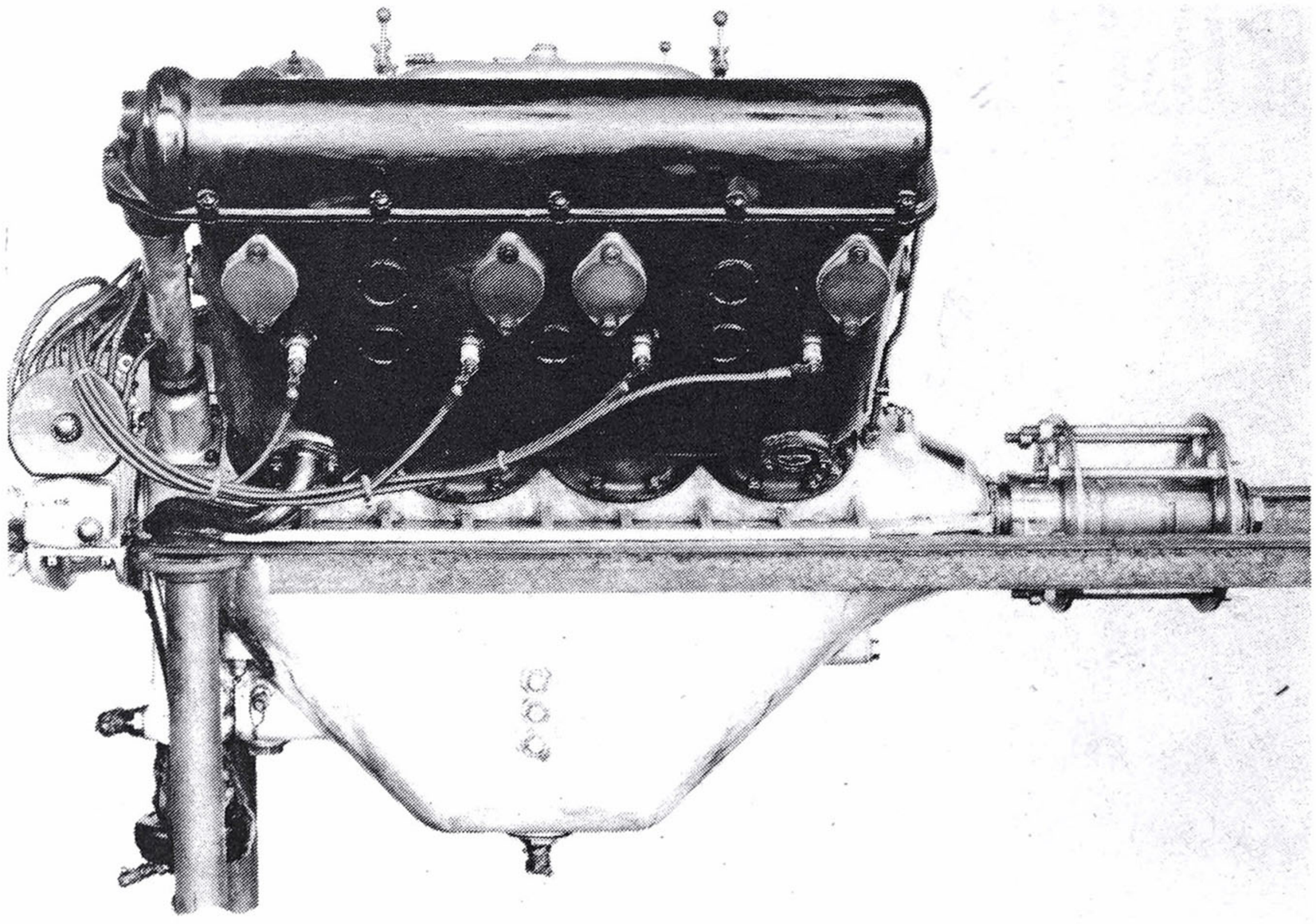

MODEL	H.P.	GEARING	BORE	DESIGN CHANGES
A	150	DIRECT DRIVE	4.72"	SAME AS MODELS "C" AND "D"
C	200	PROP. RED. GEAR	4.72"	MODEL SHOWN - SAME AS A, F
D	220	PROP. RED. GEAR	4.72"	PROVISION FOR M.G. IN VEE
E	180	DIRECT DRIVE	5.33"	LARGER CARBURETOR
F	220	PROP. RED. GEAR	4.72"	NO PROVISION FOR GUN IN VEE
H	300	DIRECT DRIVE	5.51"	RECTANGULAR OIL SUMP, 4 CARB'S.
K	300	PROP. RED. GEAR	5.51"	FOR 37mm. CANNON IN VEE
M	300	DIRECT DRIVE	5.51"	NO PROVISION FOR 37mm. CANNON

NOTE:
GEAR HOUSING ON DIRECT DRIVE MODELS ARE CASTED AS A INTREGAL UNIT OF THE CRANKCASE ALONG THE HORIZONTAL ℄.

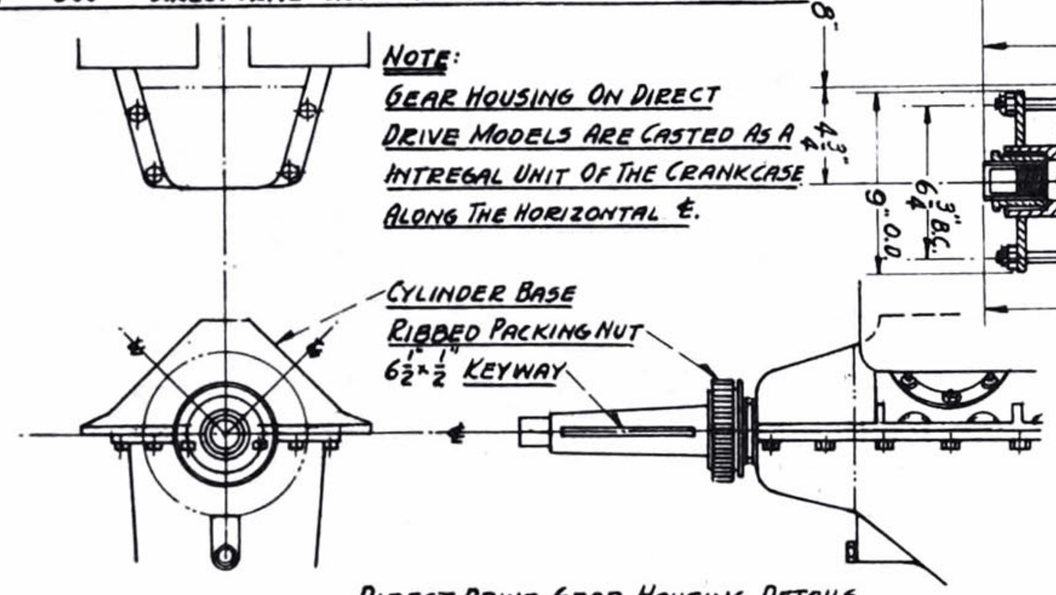

DIRECT DRIVE GEAR HOUSING DETAILS
MODELS A, E, H, & M

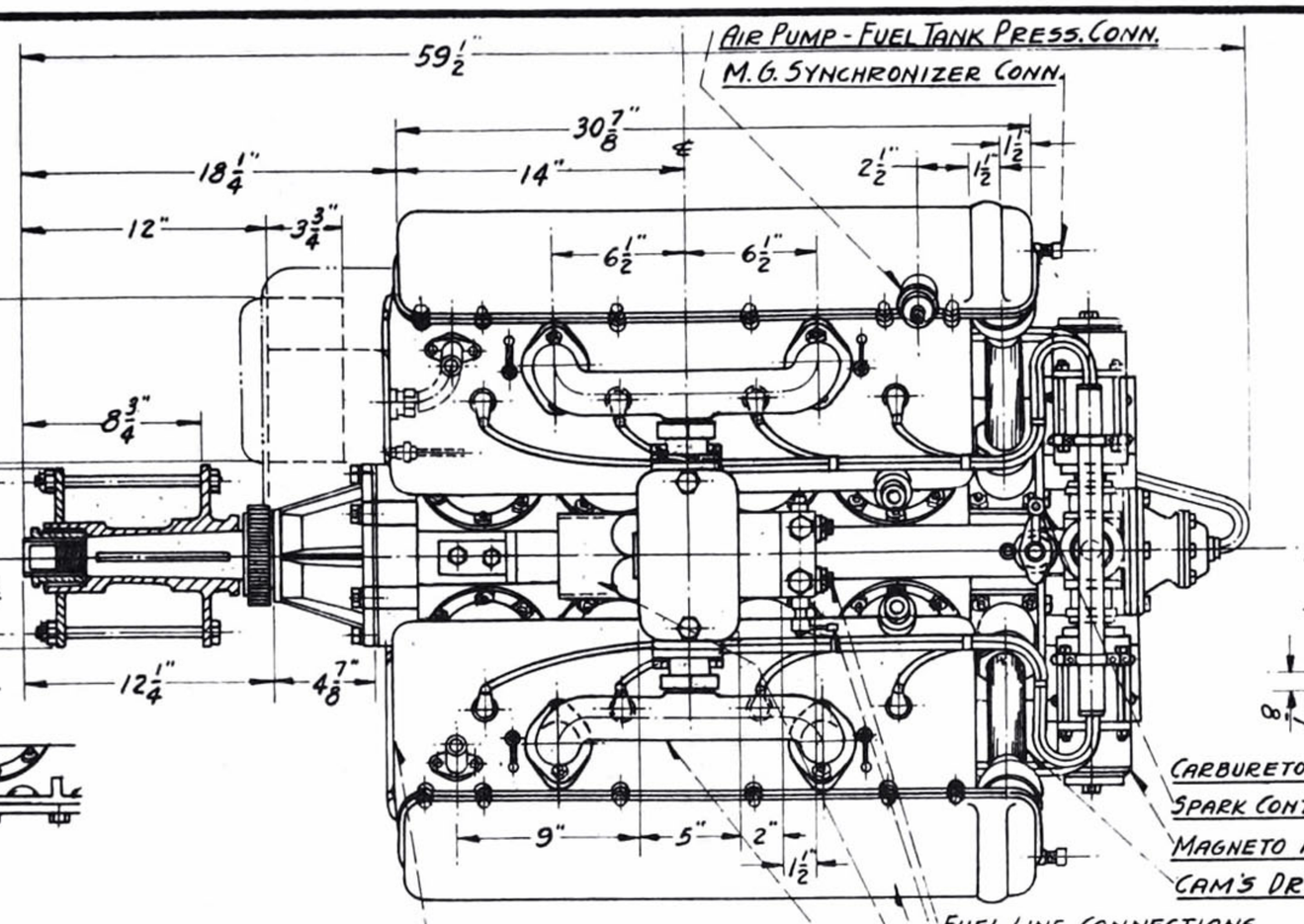

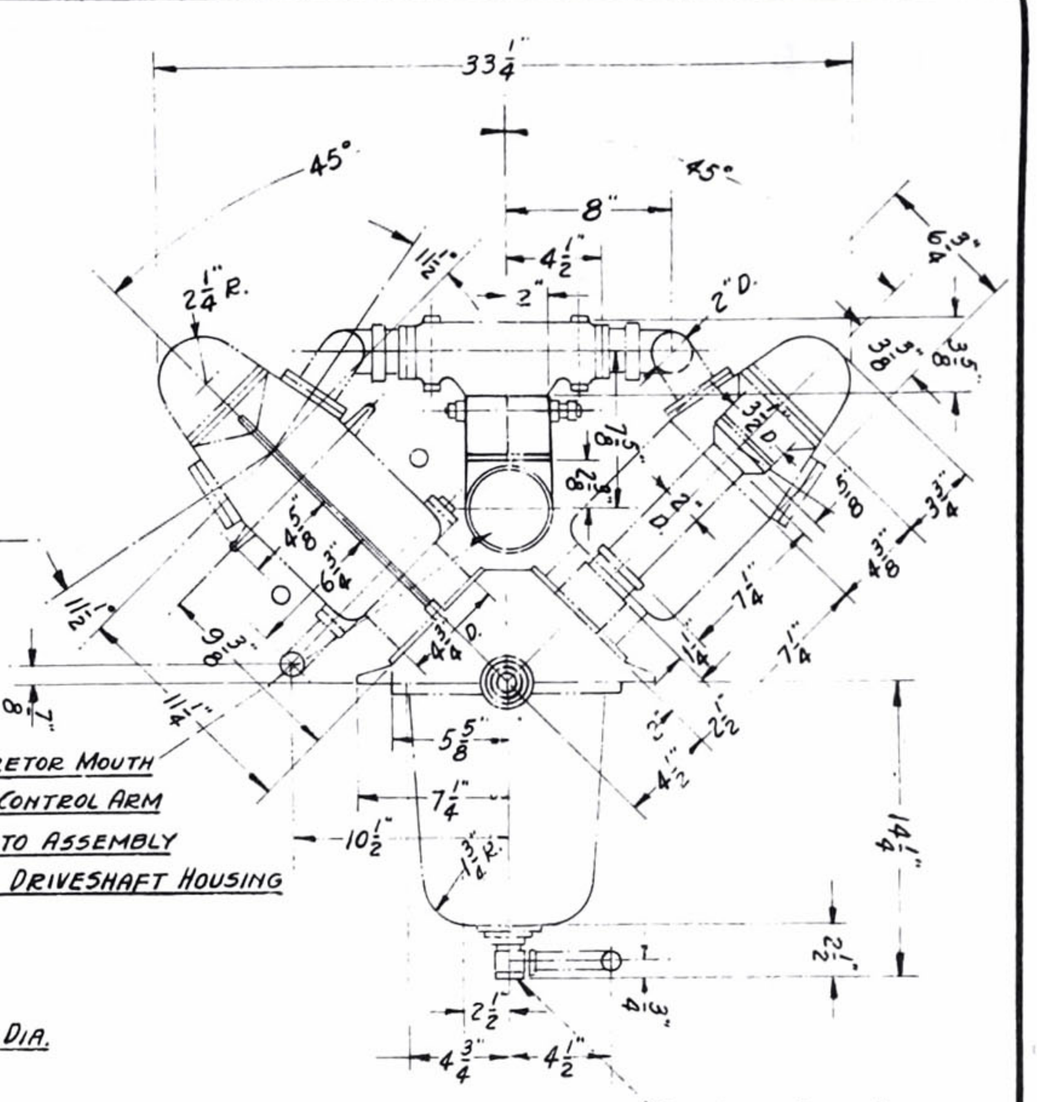

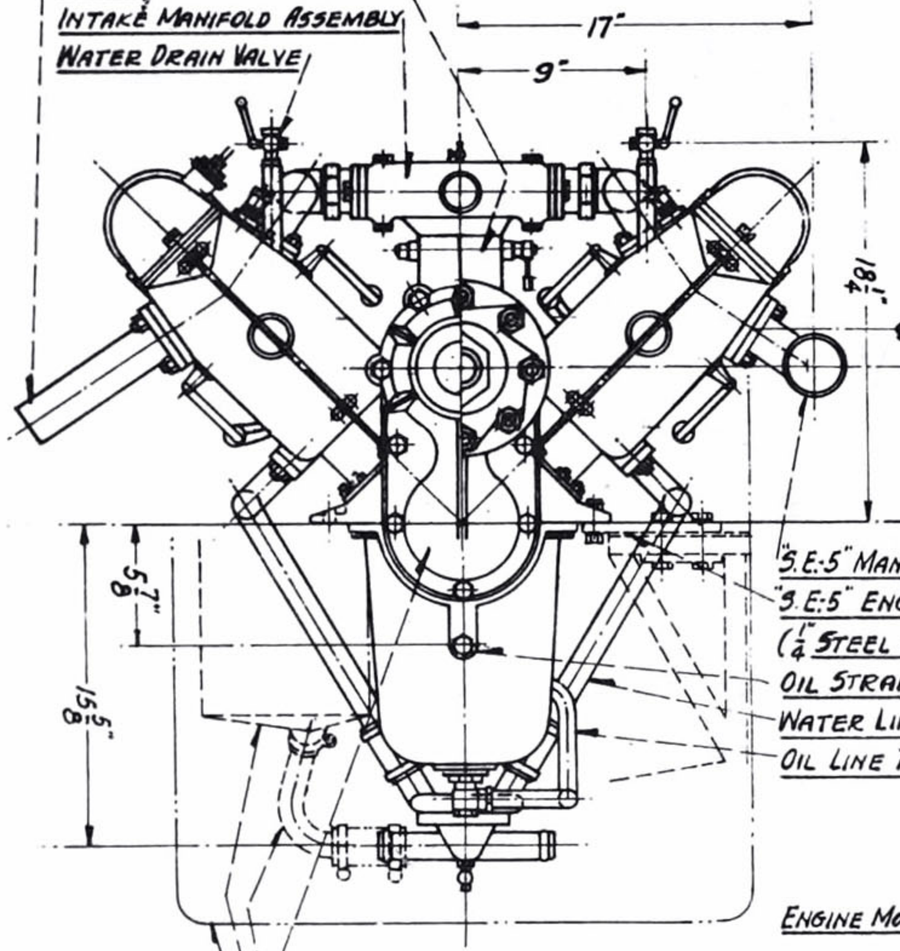

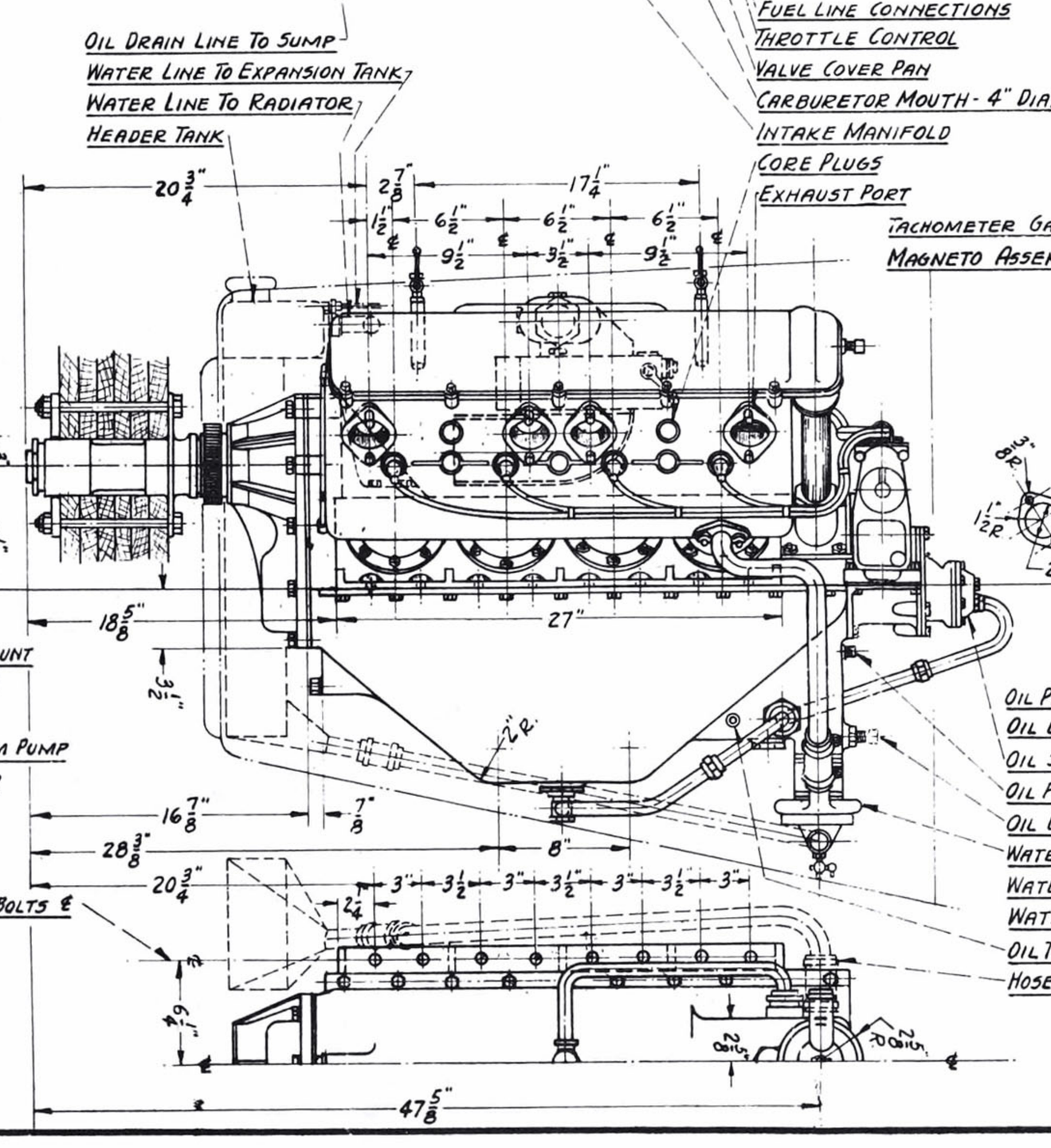

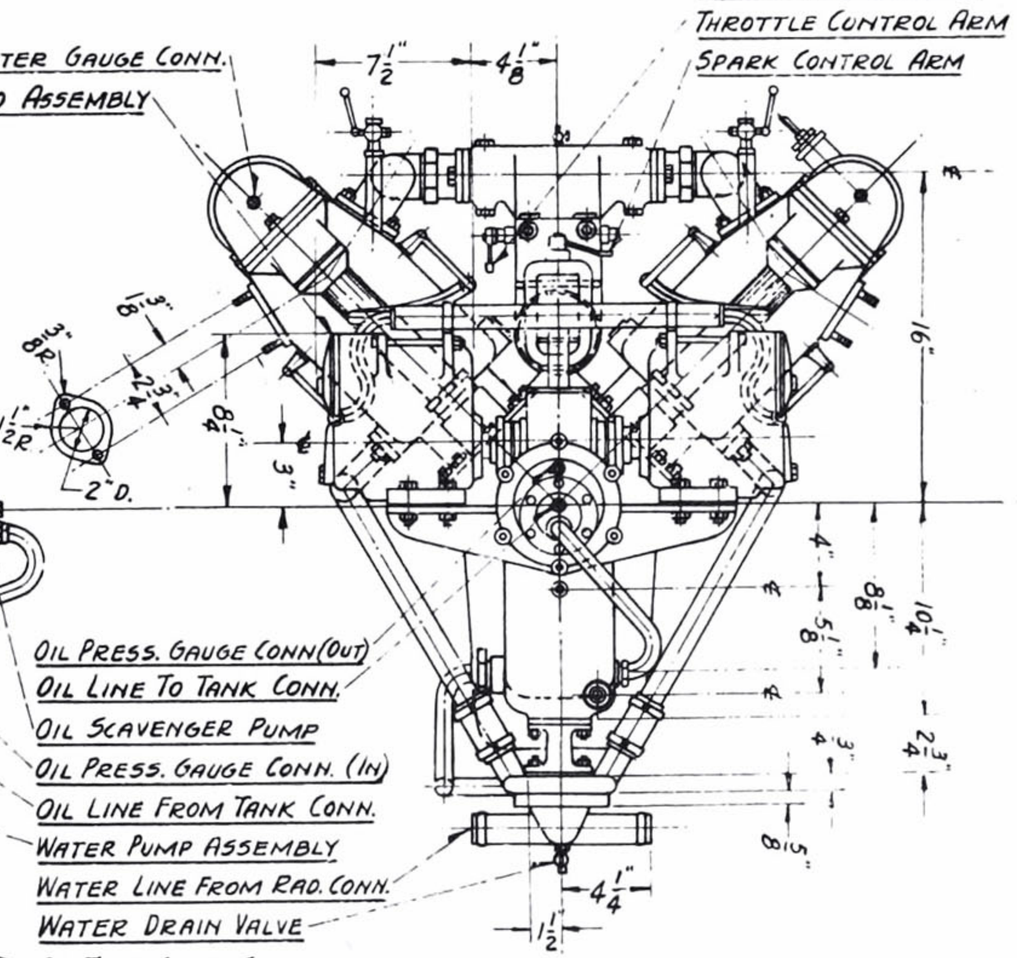

MODEL "F" SHOWN MODELS A, C, D, AND E ARE SIMILAR WITH CHANGES ON GEARINGS

AIR AGE INC., 551 FIFTH AVE., NEW YORK 17, N.Y.

SCALE: ¾" = 1'-0"	GENERAL ARRANGEMENTS AND INSTALLATION DATA
DATE:	
DRAWN BY ... W. A. WYLAM	HISPANO-SUIZA

EXHAUST PORT

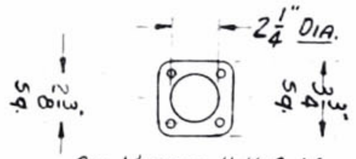

ON MODELS H, K, & M
(SAME LOCATION)

CYLINDER BLOCK - 2 REQ'D - 1 R.H. & 1 L.H.

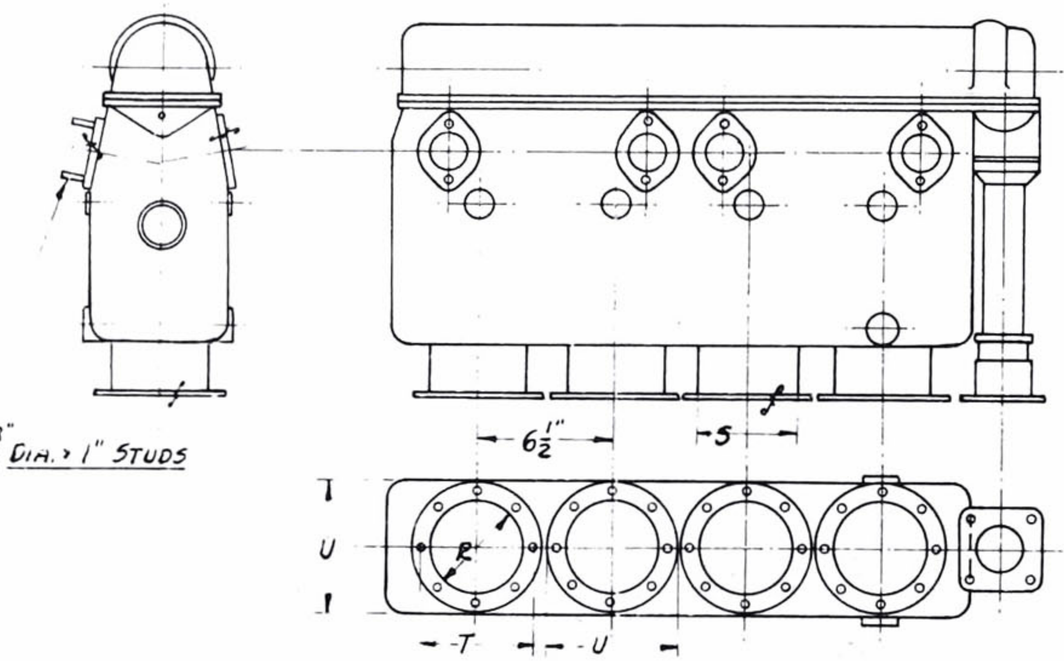

ENTIRE CYLINDER BLOCK IS OF SHINY BAKED BLACK ENAMEL

ALL TUBING & PIPING	BRASS
INTAKE MANIFOLD	ALUMINUM
VALVES (DRAIN)	BRASS
SPARK PLUGS	PORCELAIN WHITE
SPARK PLUG WIRES	RED

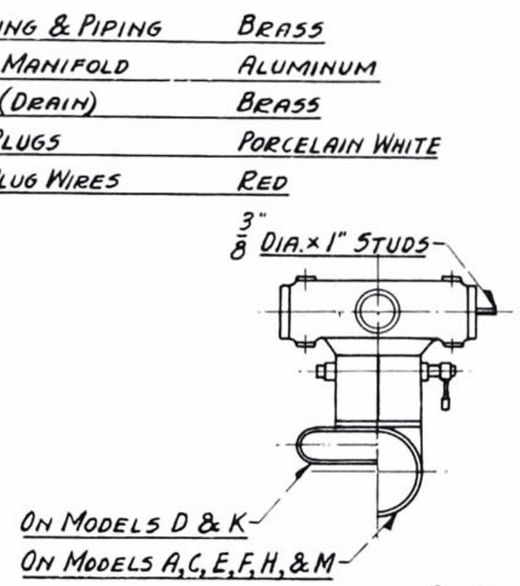

CARBURETOR & INTAKE MANIFOLD ASSEMBLY

SPARK CONTROL UNIT IS TURNED ± 90° FOR INSTALLATION OF MACHINE GUN OR CANNON IN VEE (MODELS D & K).

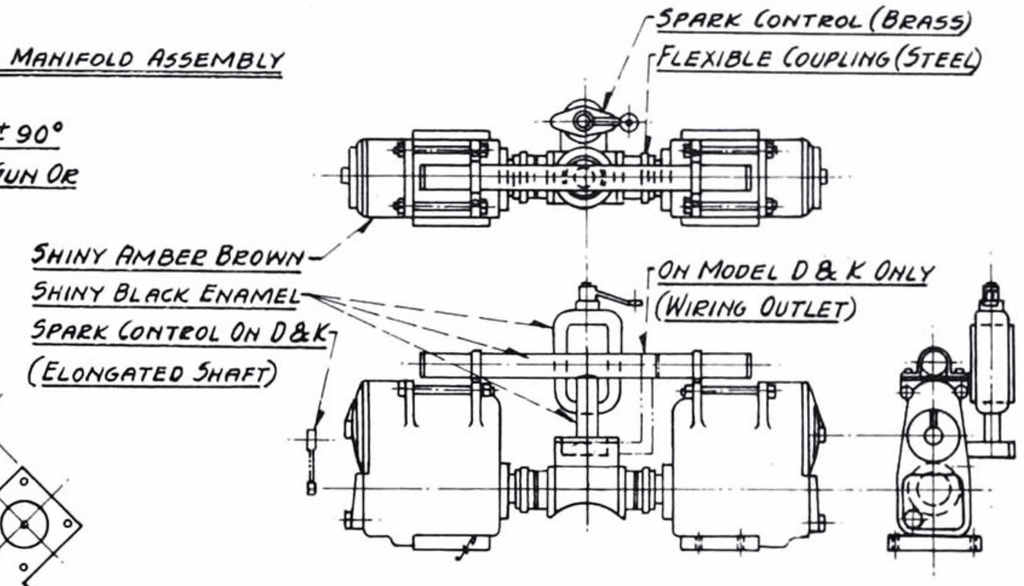

MAGNETO ASSEMBLY DETAILS

MODEL	R	S	T	U
A	4.72	5.00	5.75	6.75
C	4.72	5.00	5.75	6.75
D	4.72	5.00	5.75	6.75
E	5.33	5.50	6.375	7.375
F	4.72	5.00	5.75	6.75
H	5.51	5.75	6.50	7.50
K	5.51	5.75	6.50	7.50
M	5.51	5.75	6.50	7.50

CRANK-CASE DETAILS

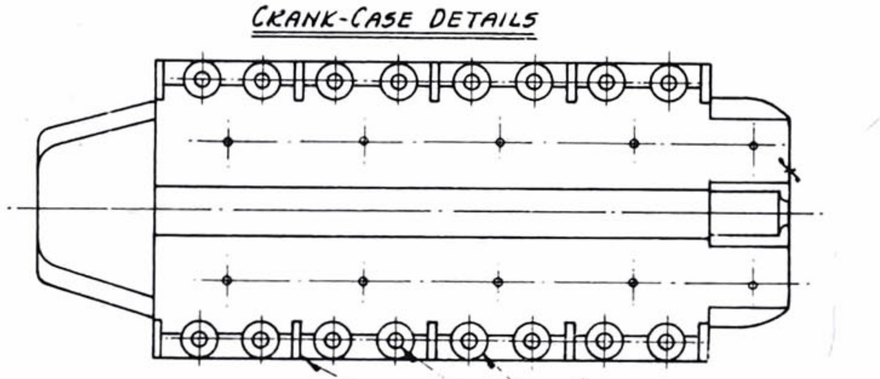

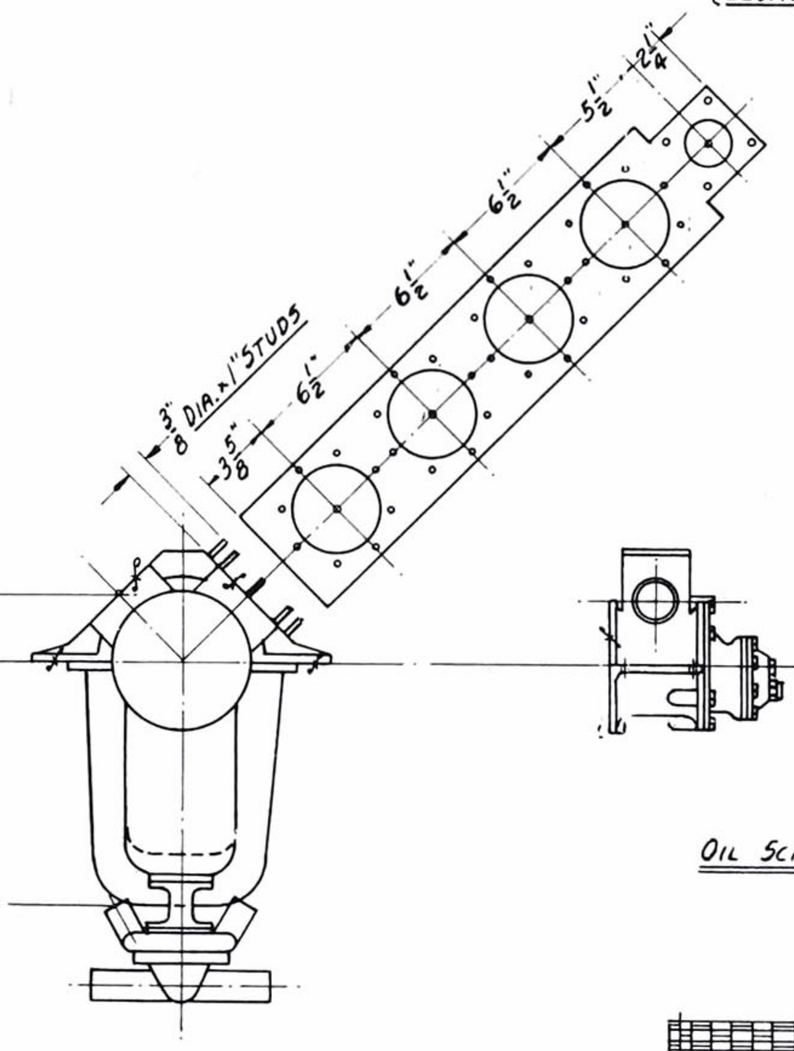

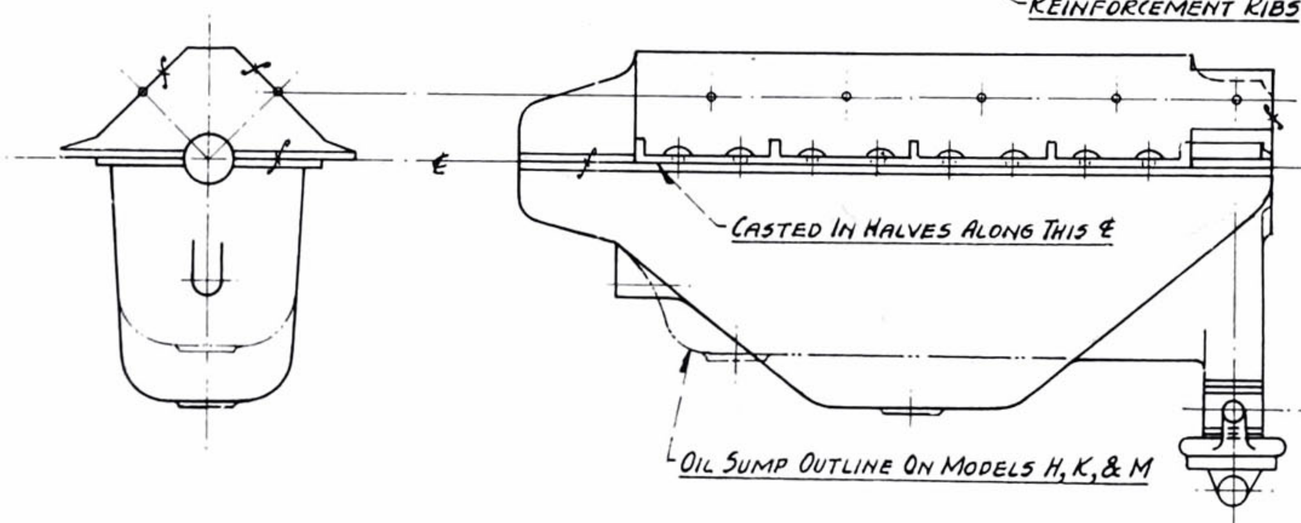

ENTIRE CRANK-CASE ASSEMBLY IS OF DULL ALUMINUM FINISH

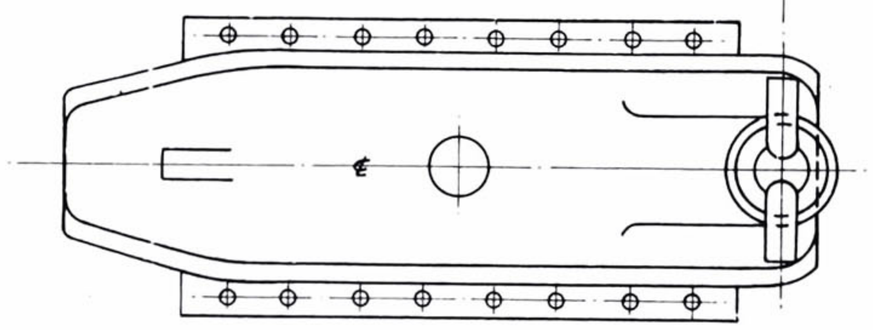

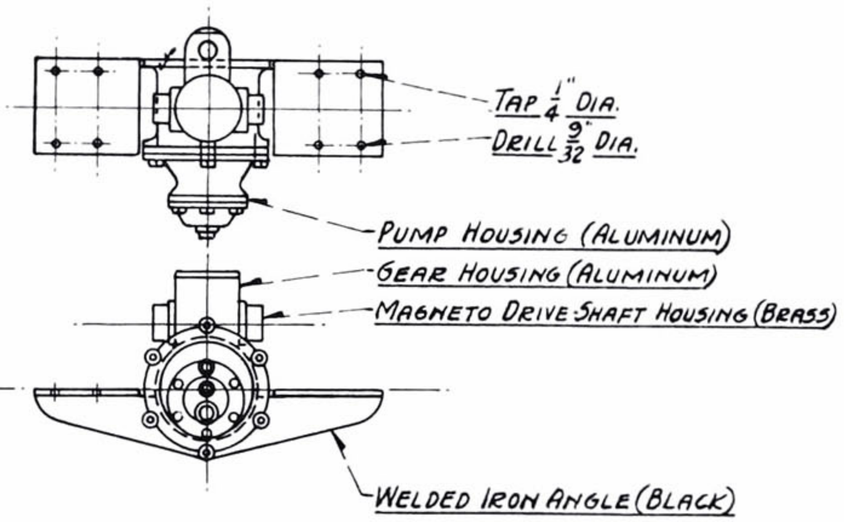

OIL SCAVENGER PUMP DETAILS

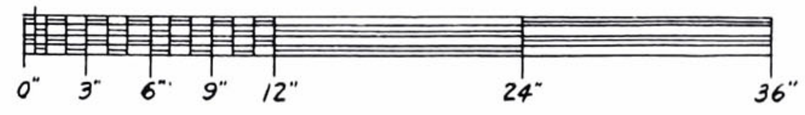

AIR AGE INC., 551 FIFTH AVE., NEW YORK 17, N.Y.	
SCALE: 3/4" = 1'-0"	GENERAL DESIGN DETAILS & SPECIFICATIONS
DATE:	
DRAWN BY ... W. A. WYLAM	HISPANO-SUIZA

Mercedes 160 hp & 180 hp

drawings by WILLIAM WYLAM

DESCRIBED as very reliable, the Mercedes engine was developed for the Automobile Technical Society prize of 5,000 pounds sterling during 1911. The 100-hp model won the chief prize in the Kaiser engine competition in 1912 and the Mercedes-Daimler Motoren Gesellschaft, Stuttgart, Germany, firm went on to produce even larger engines and automobiles. Produced between 1914 and 1918, the 160- and 180-hp versions were used in a wide variety of German aircraft, such as the Albatros D.III and the Fokker D.VII. The F-1466 engine had a rating of 160 hp at 1,400 rpm and the F-1466D-3A was rated at 180 hp at 1,400 rpm. These were liquid-cooled engines and were known for their reliability and excellent durability due to the fine craftsmanship insisted upon by the company, a feature that is still held to modern times.□

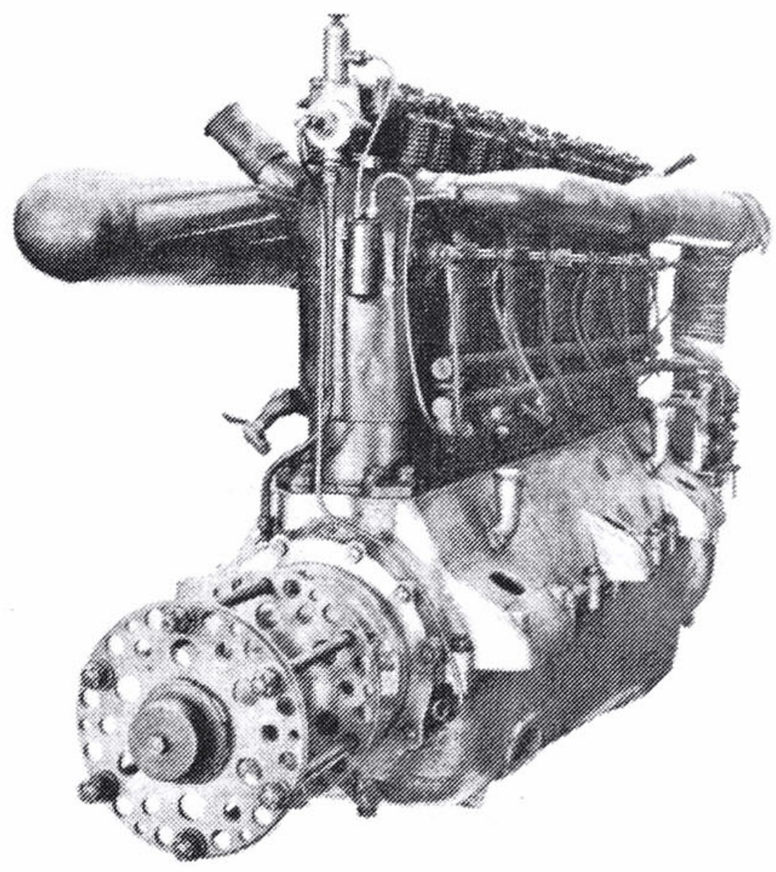

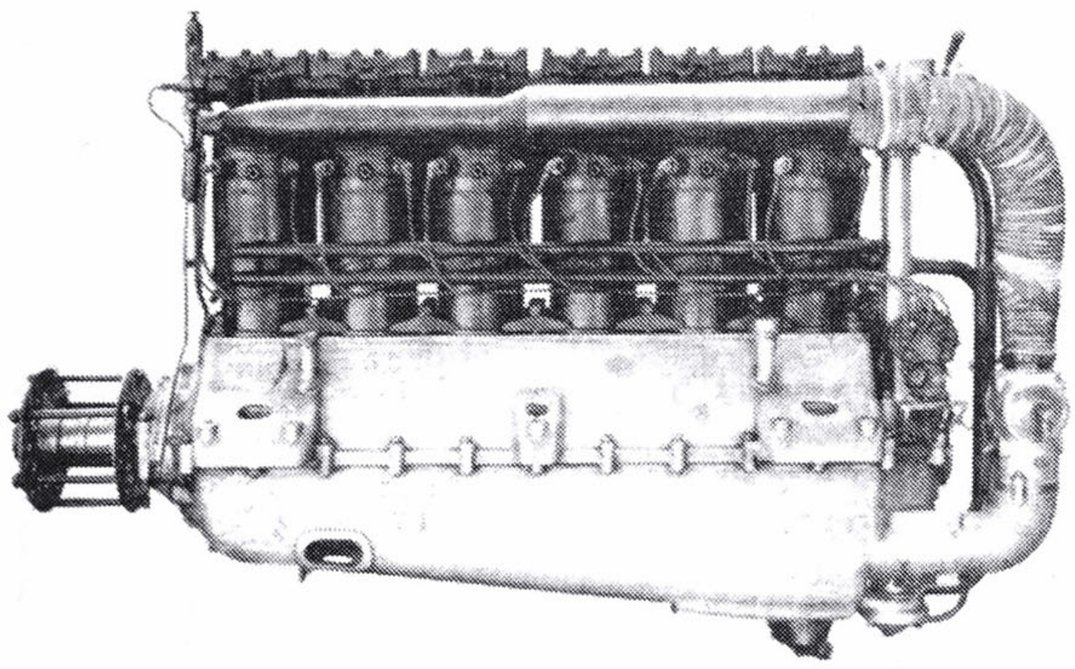

Left and below: Mercedes engines were known for their ruggedness and low maintenance requirements.

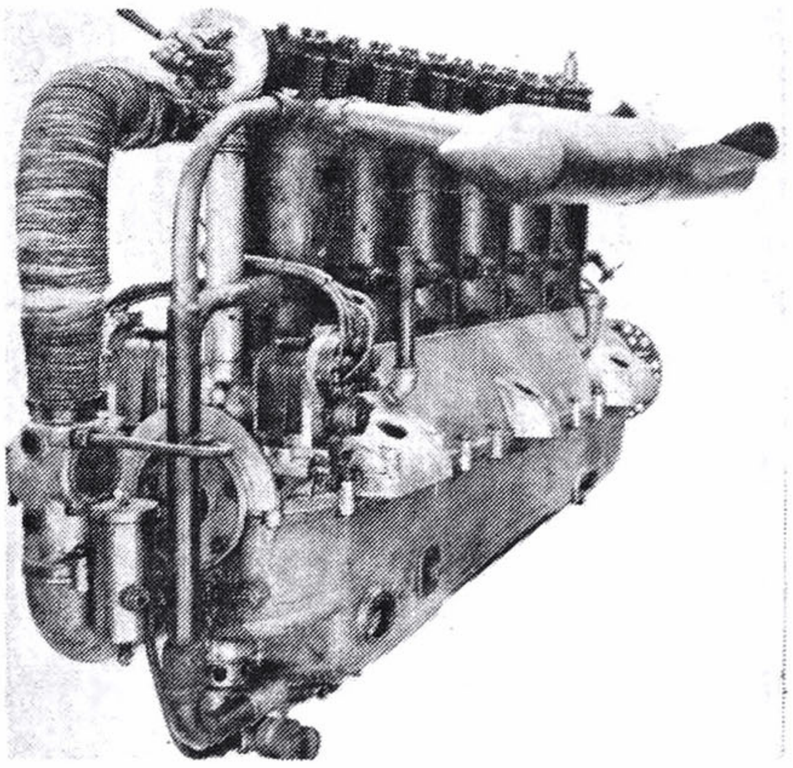

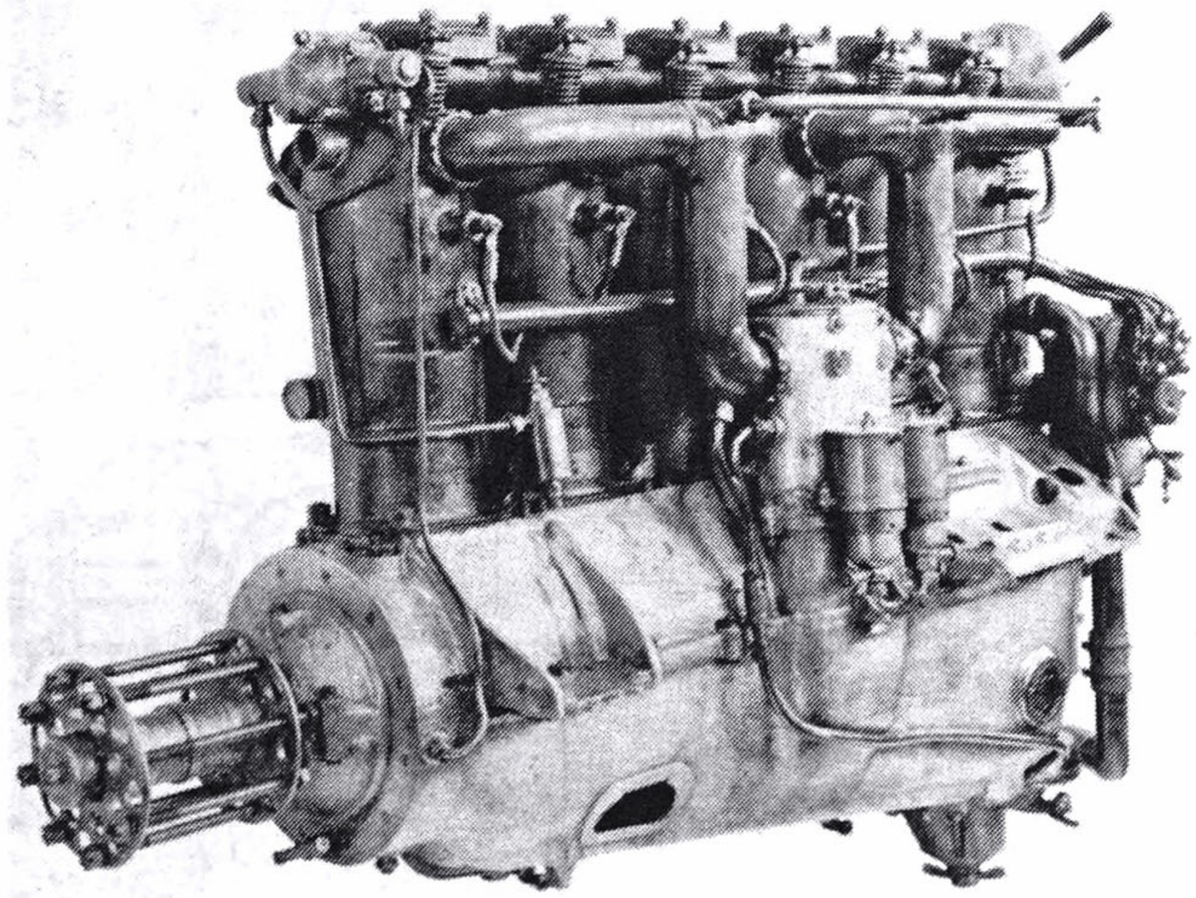

Above: Front and rear views of the Mercedes demonstrate the thin profile which allowed for streamlining of the airframe design. "Jane's All the World's Aircraft" photos.

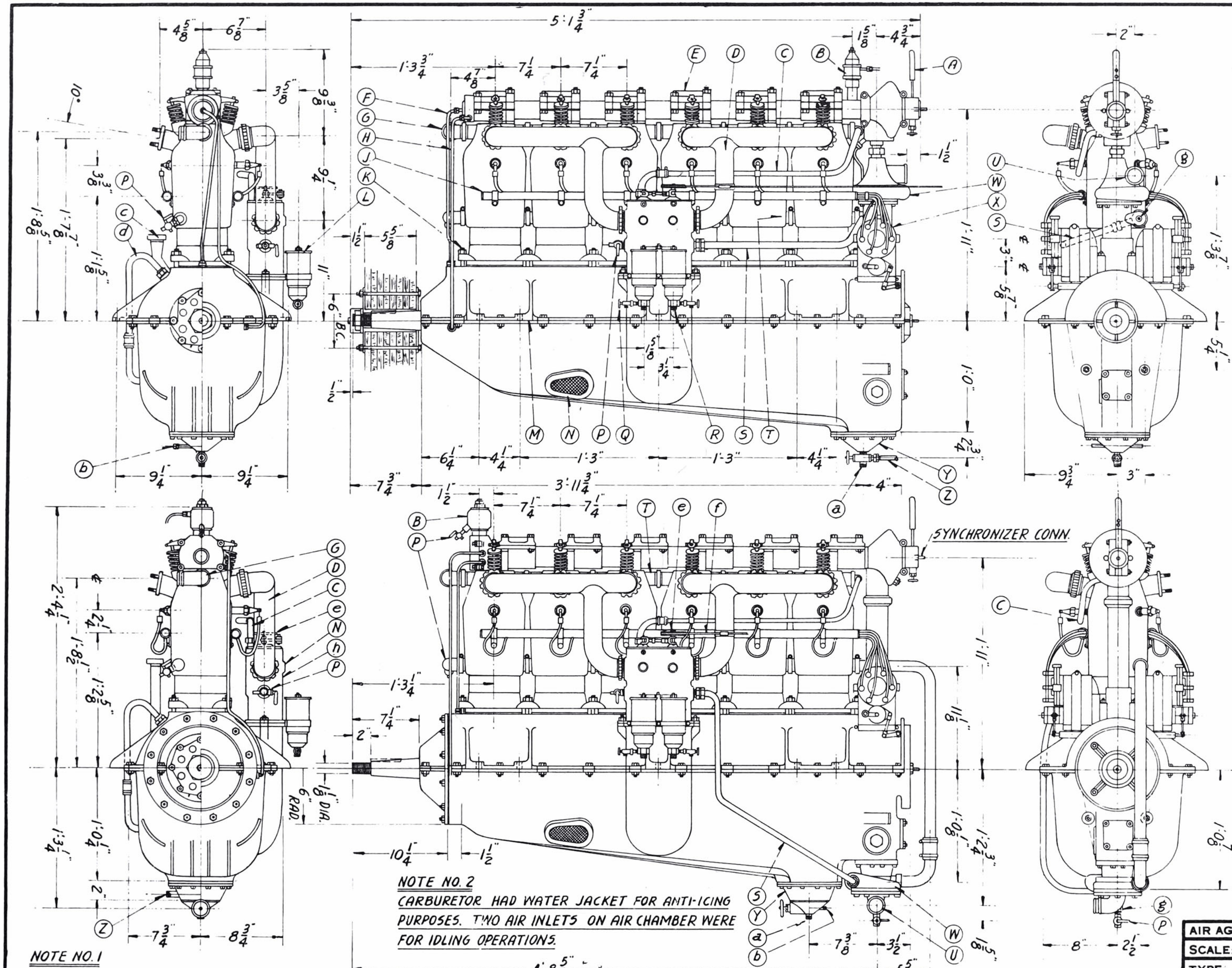

F-1466

BORE 5.51"
STROKE 6.3"
160 H.P. @ 1,400 R.P.M.

- (A) DE-COMPRESSION LEVER
- (B) AIR PUMP (FUEL PRESSURE)
- (C) CARBURETOR HEAT (WATER)
- (D) INTAKE MANIFOLD
- (E) CAMSHAFT & ROCKER CASING
- (F) OIL LINE TO OIL PUMP
- (G) WATER INLET ELBOW
- (H) OIL LINE FROM OIL PUMP
- (J) FIBER SUPPORT TUBE (WIRES)
- (K) CYLINDER HOLD-DOWN BOLTS
- (L) TWIN JET CARBURETORS
- (M) ENGINE MOUNT
- (N) CARBURETOR AIR INTAKE
- (P) PET COCK - WATER DRAIN
- (Q) PET COCK - CARBURETOR DRAIN
- (R) FUEL LINE CONNECTIONS

F-1466D-3A

BORE 5.51"
STROKE 6.3"
180 H.P. @ 1,400 R.P.M.

- (S) CARBURETOR HEAT (TO PUMP)
- (T) WATER INLET CONNECTIONS
- (U) WATER OUTLET (TO RADIATOR)
- (W) WATER PUMP
- (X) TWIN MAGNETOS
- (Y) OIL PUMP
- (Z) OIL LINE CONN. (FROM TANK)
- (a) OIL DRAIN
- (b) OIL TEMPERATURE GAGE CONN.
- (c) OIL SUMP FILL
- (d) OIL BYPASS LINE
- (e) THROTTLE PULLEY
- (f) THROTTLE CONTROL CABLES
- (g) WATER TEMP GAGE CONN.
- (h) AIR CHAMBER

NOTE NO. 1
AIR SUPPLY PASS THRU PASSAGE INSIDE OF CRANKCASE TO AIR CHAMBER. INTERNAL OIL COOLING FINS WARMED THE INRUSHING AIR SUPPLY.

NOTE NO. 2
CARBURETOR HAD WATER JACKET FOR ANTI-ICING PURPOSES. TWO AIR INLETS ON AIR CHAMBER WERE FOR IDLING OPERATIONS.

NOTE NO. 3
DE-COMPRESSION LEVER WAS USED TO REDUCE COMPRESSION DURING STARTING OPERATIONS.

NOTE NO. 4
MACHINE GUN SYNCHRONIZER UNIT WAS ATTACHED TO THE REAR END OF THE CAMSHAFT.

AIR AGE INC., 551 FIFTH AVE., NEW YORK 17, N.Y.
SCALE: ¾" = 1'0"
TYPE: INLINE
COPYRIGHT 1948 WILLIAM A. WYLAM
GENERAL ARRANGEMENT
GERMANY'S 160 & 180 H.P.
MERCEDES
BUILT 1914-18 BY DAIMLER-MOTOREN GESELLSCHAFT

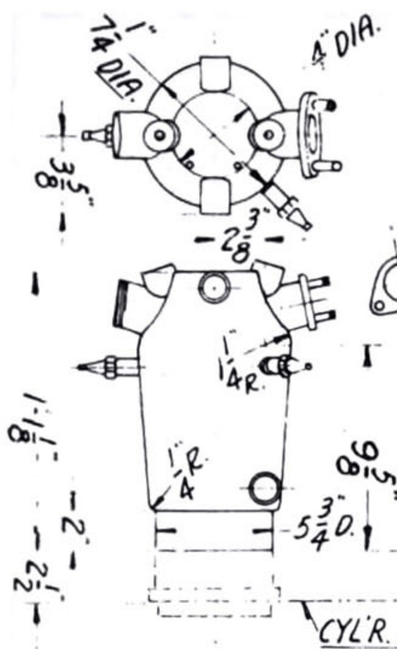

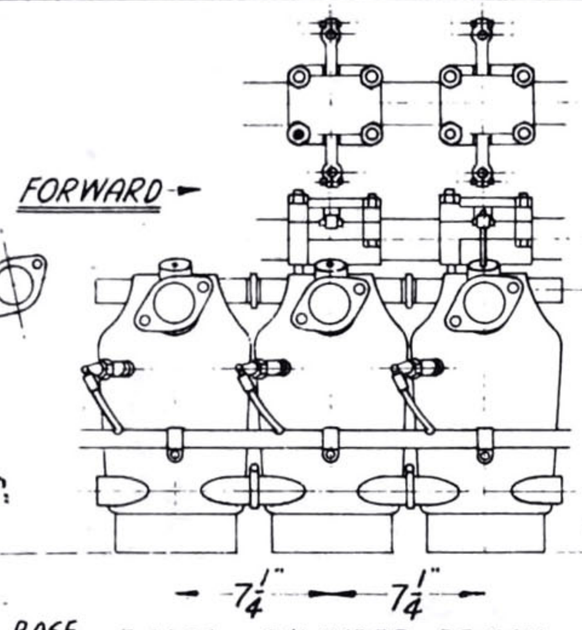

F-1466 CYLINDER DESIGN

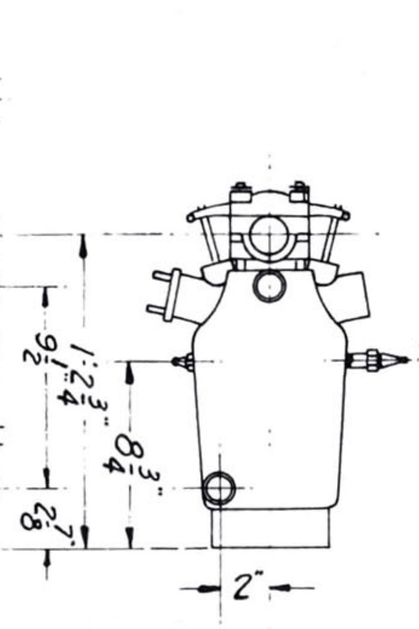

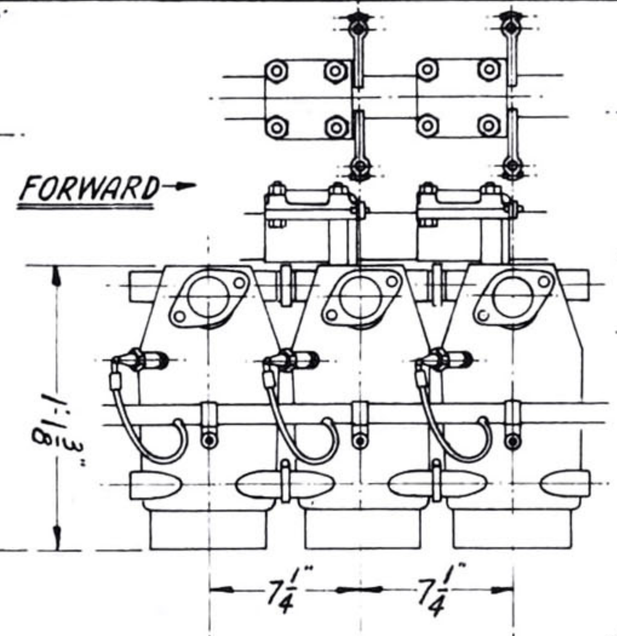

F-1466D-3A CYLINDER DESIGN

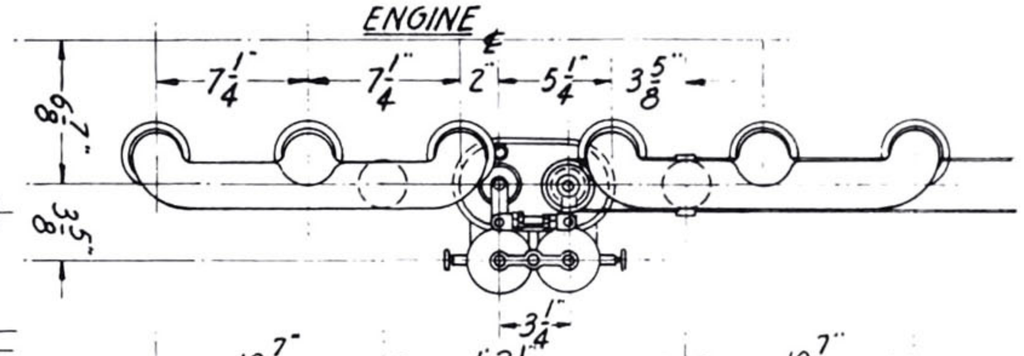

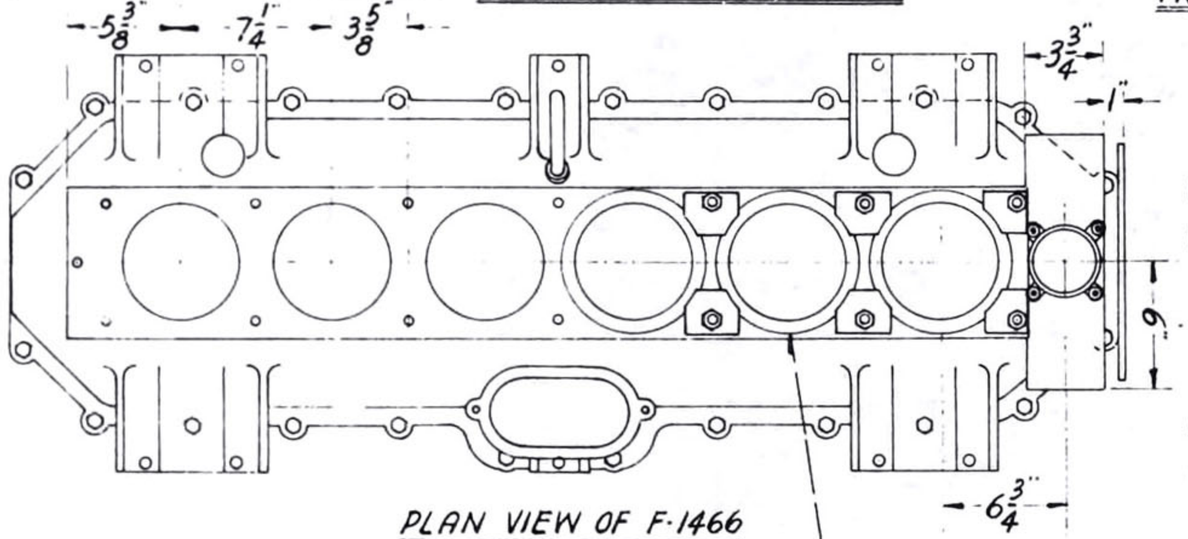

PLAN VIEW OF F-1466
(F-1466D-3A SIMILAR)

CYLINDER BASE

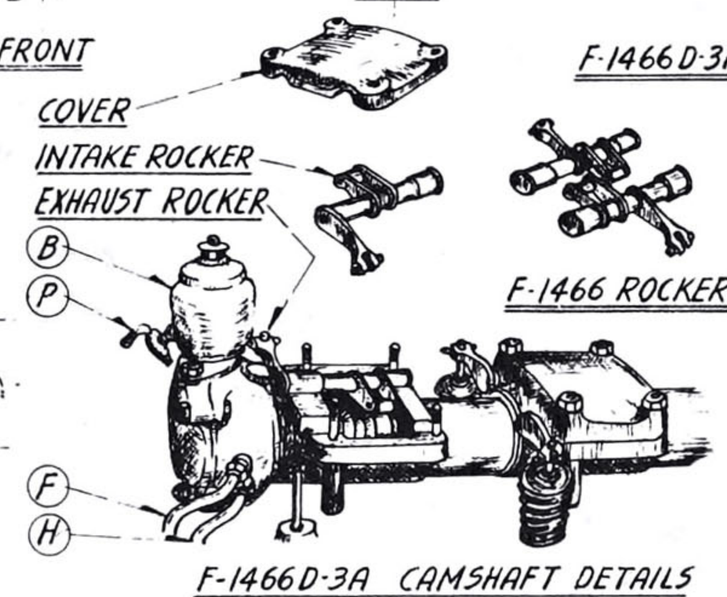

F-1466D-3A CAMSHAFT DETAILS

F-1466 ROCKERS

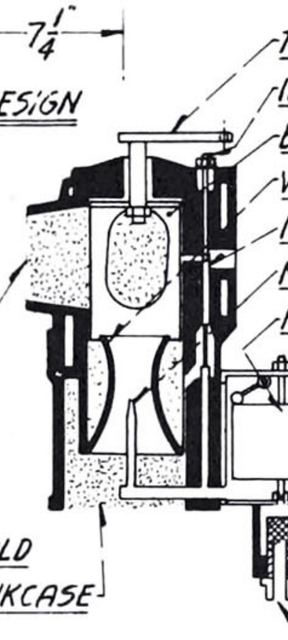

MERCEDES TWIN JET UPDRAFT
CARBURETOR & MANIFOLD

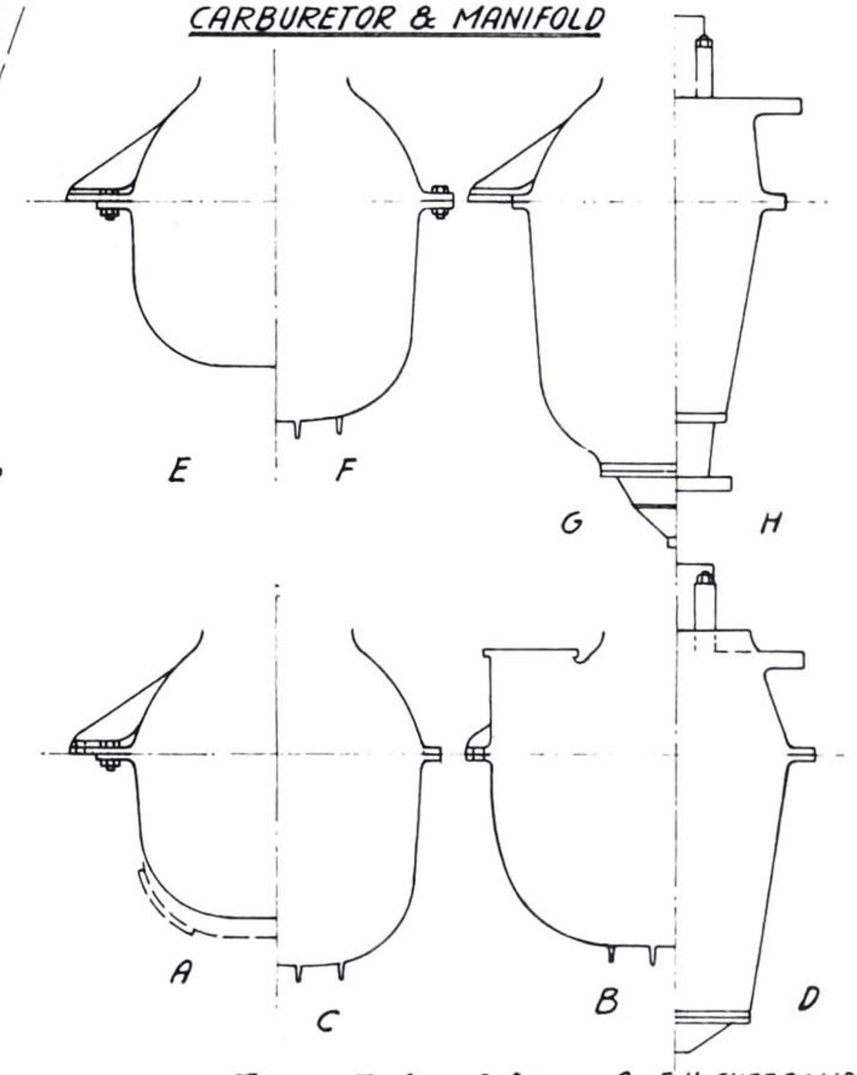

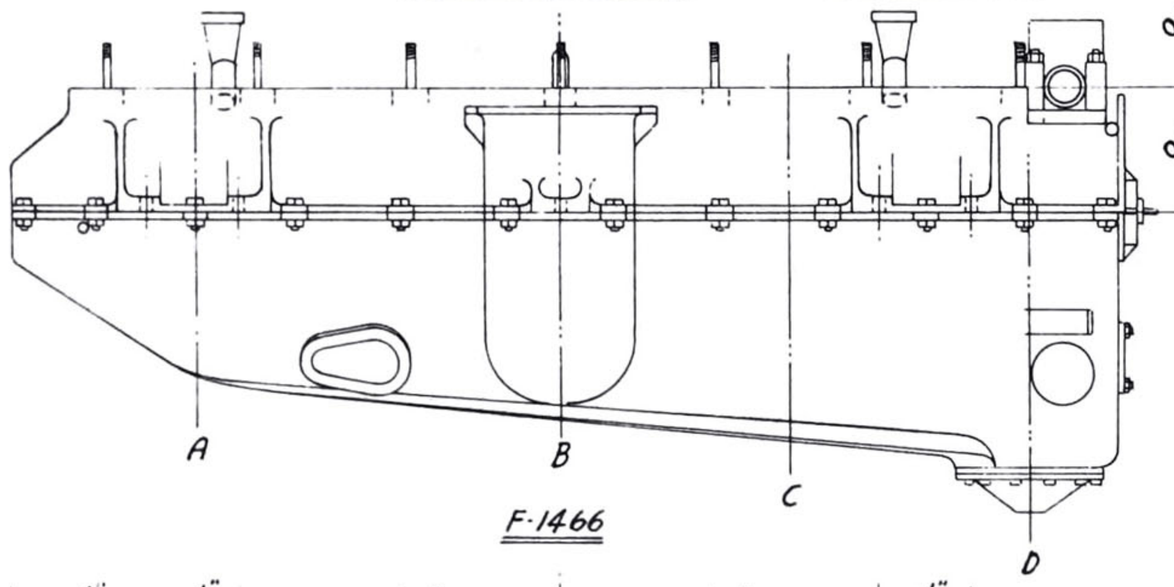

F-1466

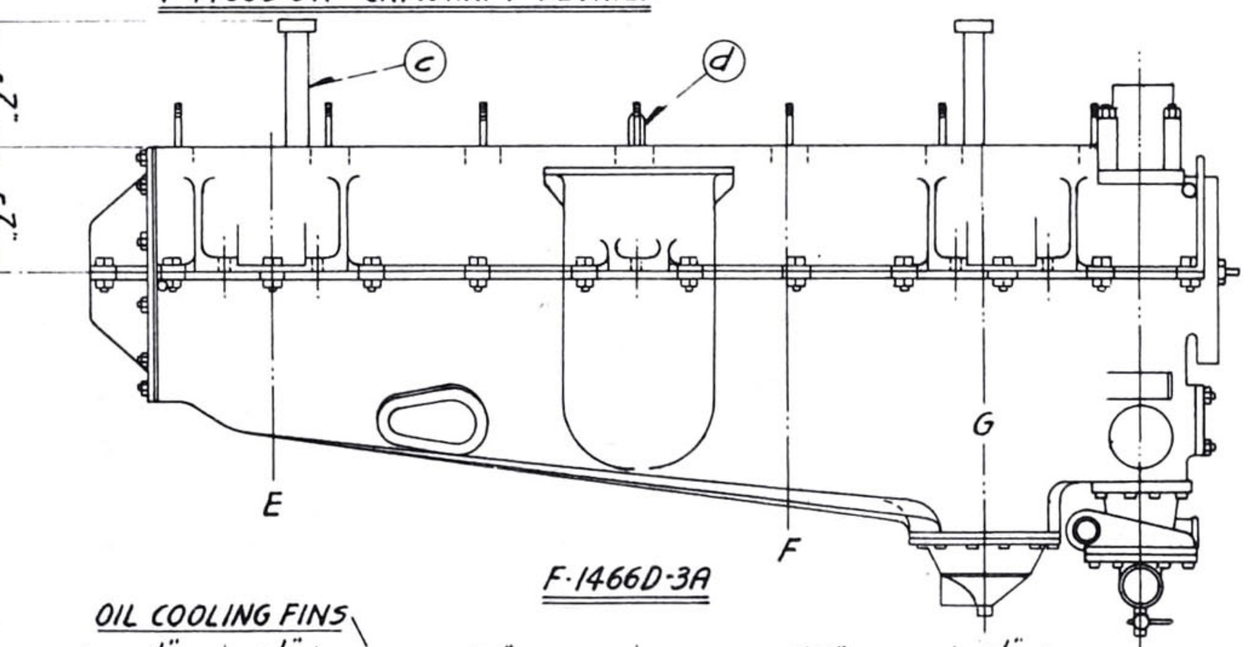

F-1466D-3A

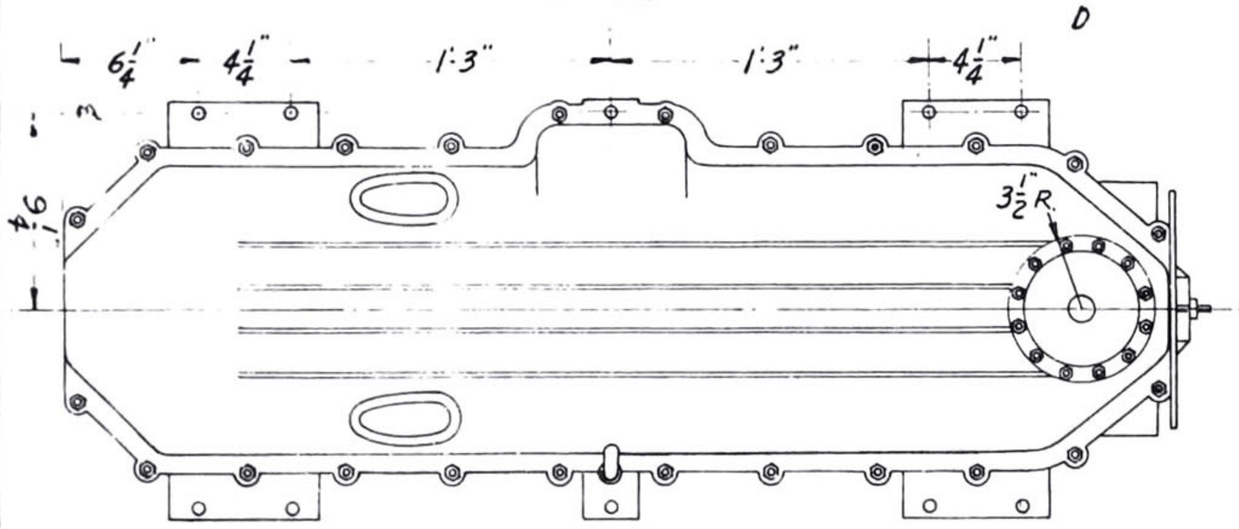

BOTTOM VIEW OF F-1466

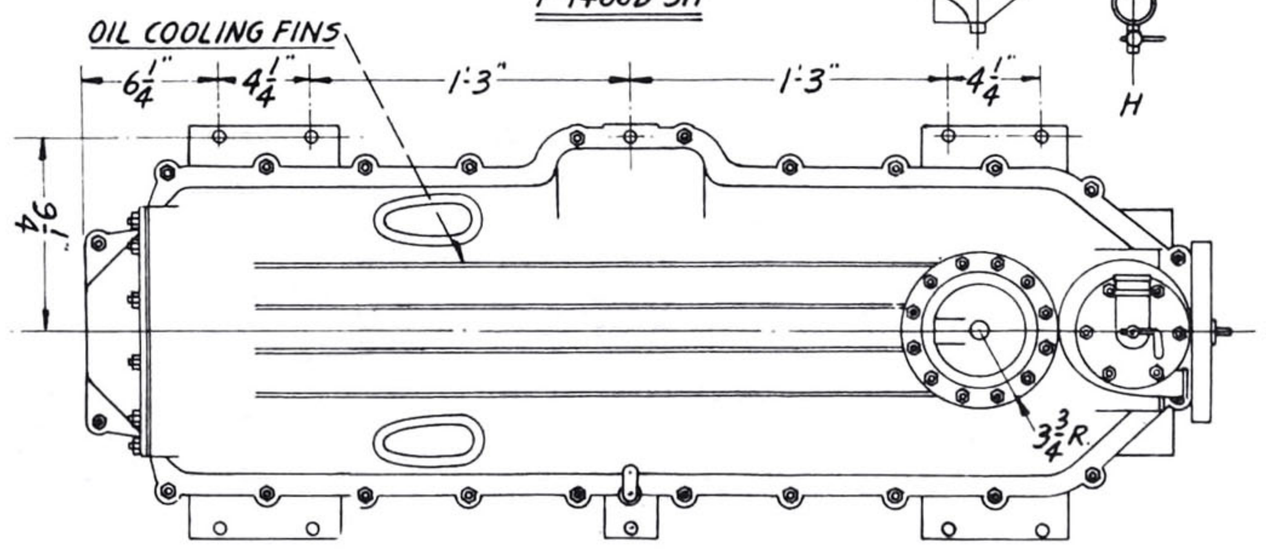

BOTTOM VIEW-F-1466D-3A

THANKS TO GLEN D. ANGLE & E.H. SHERBONDY

AIR AGE INC., 551 FIFTH AVE., NEW YORK 17, N.Y.
SCALE: ¾" = 1'-0"
TYPE: INLINE
COPYRIGHT 1948
WILLIAM A. WYLAM

LAYOUTS & DETAILS
GERMANY'S 160 & 180 H.P.

MERCEDES

BUILT 1914-18 BY DAIMLER-MOTOREN GESELLSHAFT

Siemens-Halske

drawing by WILLIAM WYLAM

THE SIEMENS & HALSKE Aero Engine Department, Berliner Chausse, Berlin-Spandau, engaged in the manufacturing of aero-engines before WW I. Toward the end of the war, they designed and manufactured rotary engines in which the crankcase and the crankshaft were geared together, so that each rotated at half-engine speed in opposite directions. For the time, this engine made some very remarkable climbs to high altitudes. For high-altitude performance, the engine was fitted with high-compression cylinders. Used in such airplanes as the Roland Parasol and the Siemens-Schuckert biplanes, the engine had the capability of turning huge, four-bladed props due to the unique nature of the engine gearing, giving the aircraft equipped with them some very powerful and maneuverable machines. □

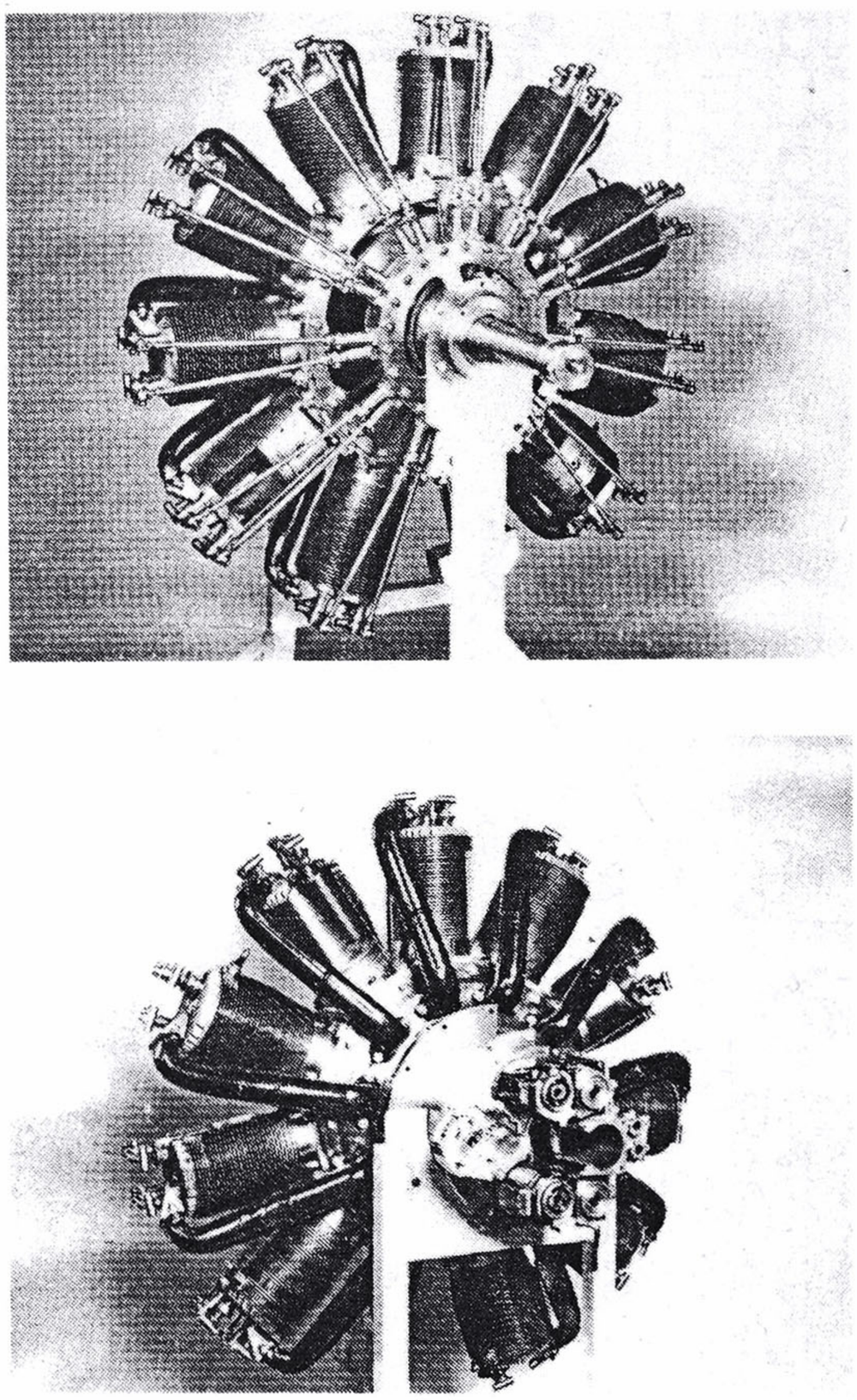

The Siemens-Halske Sh.III contra-rotary, on exhibit at the Science Museum in S. Kensington, England. Science Museum photo.

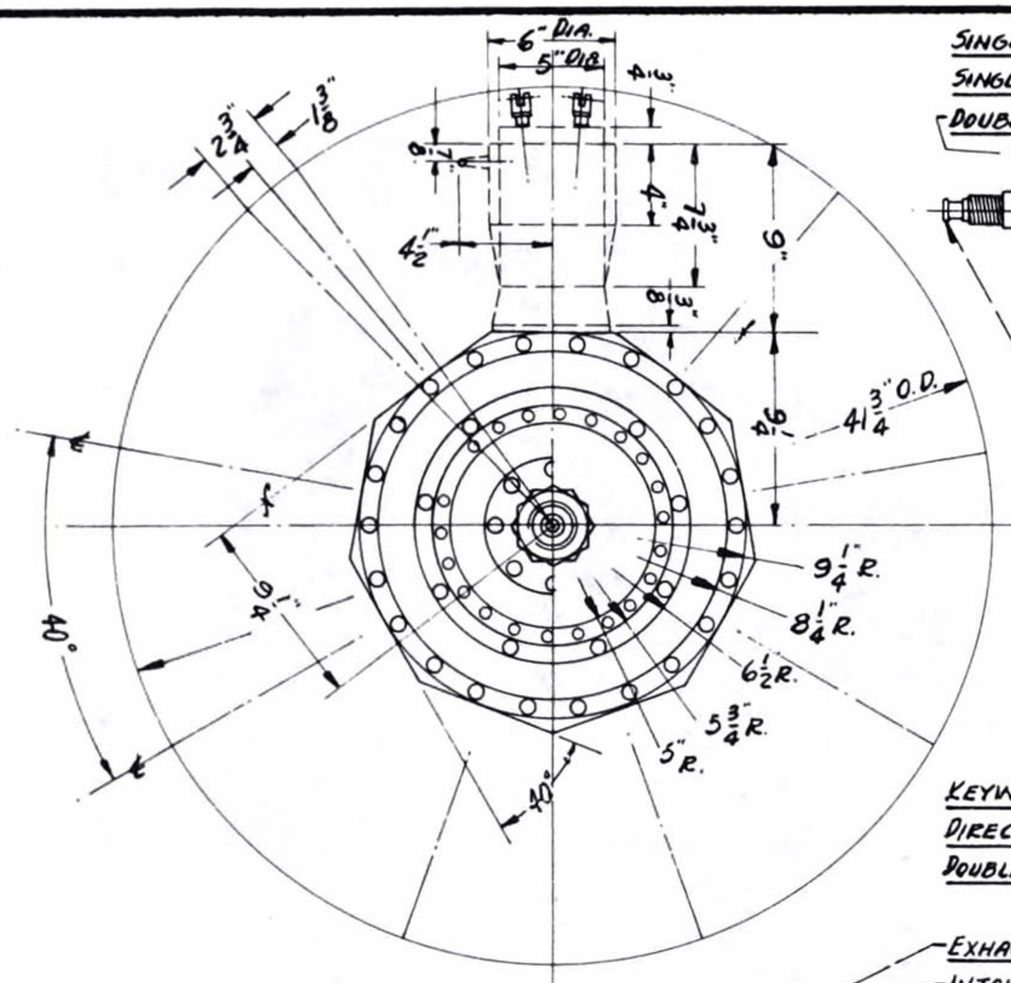

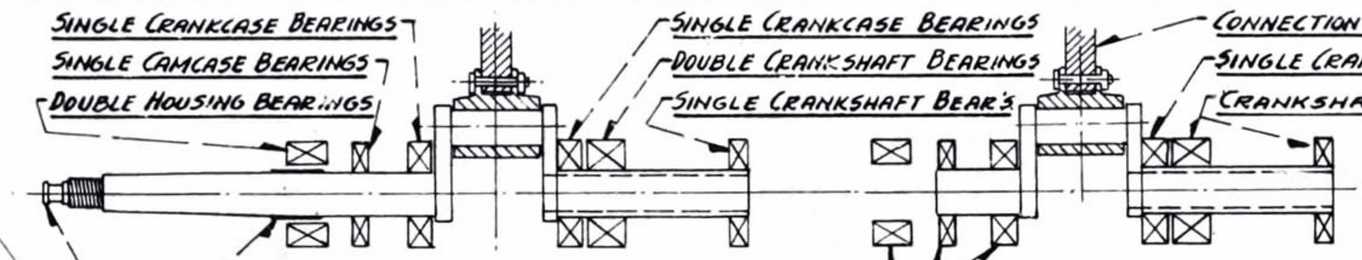

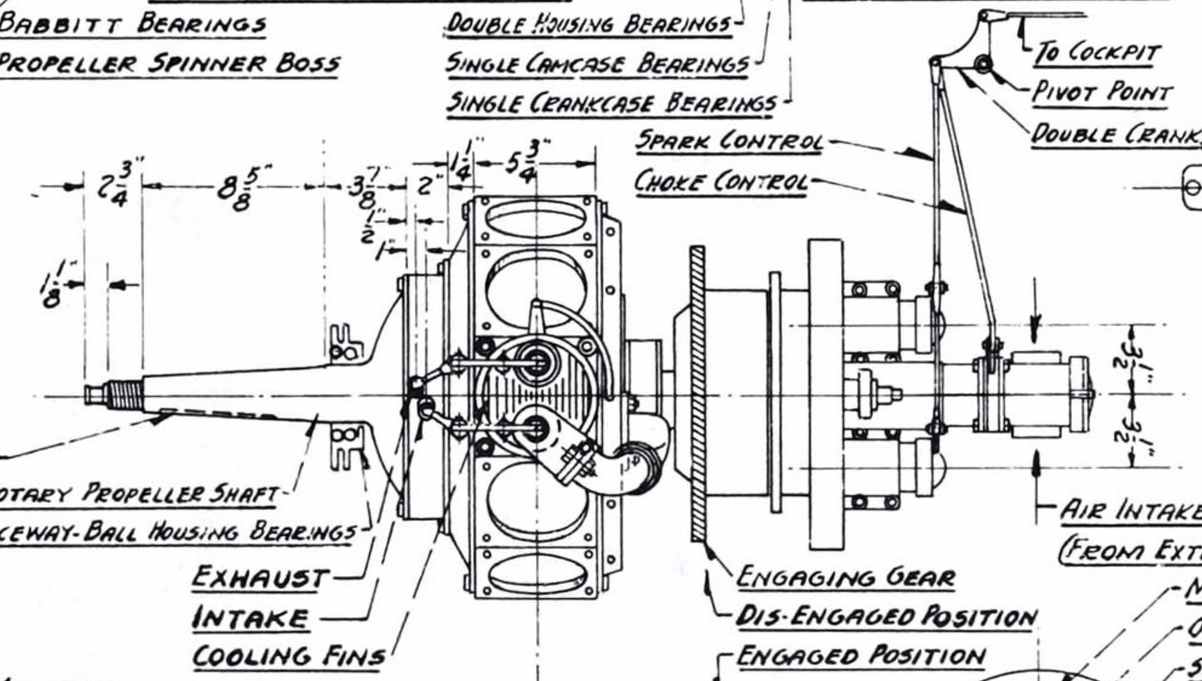

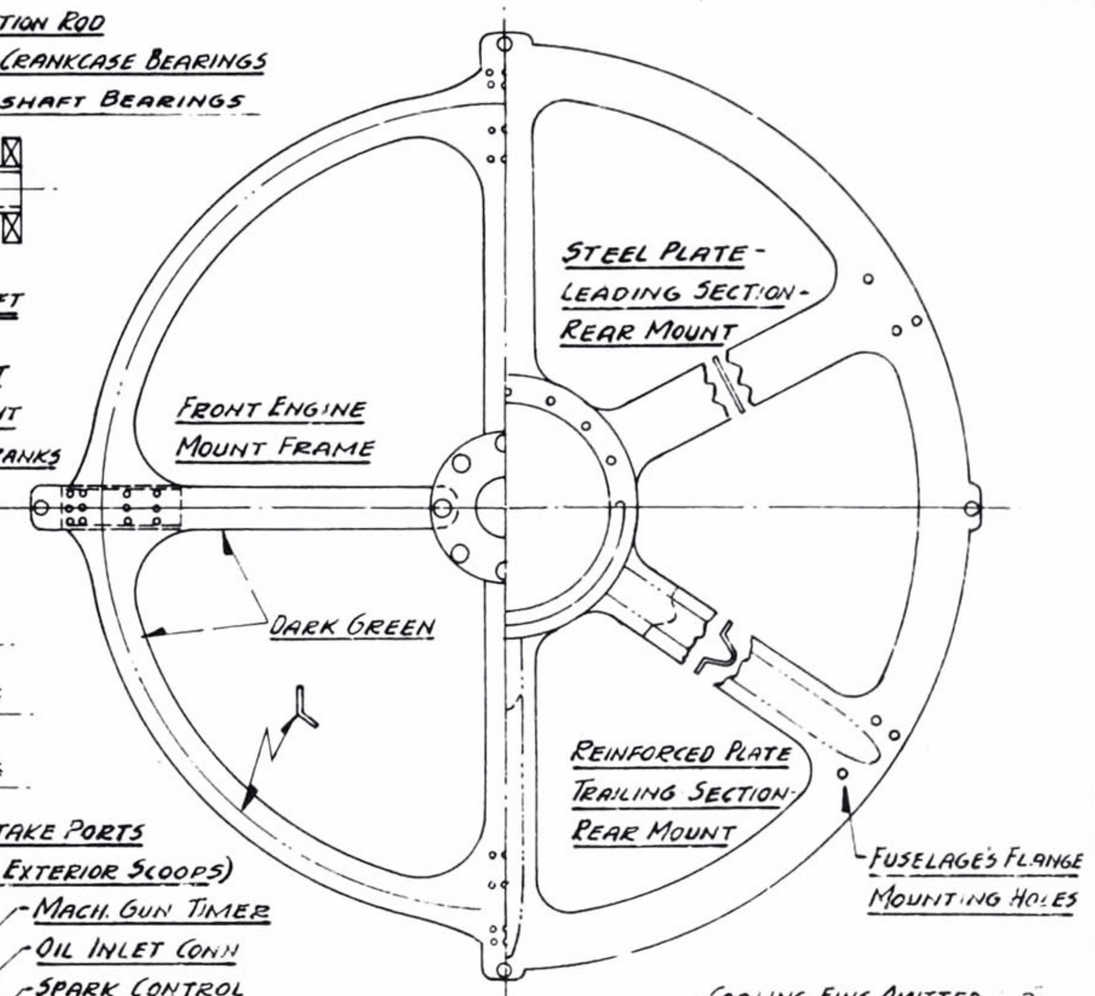

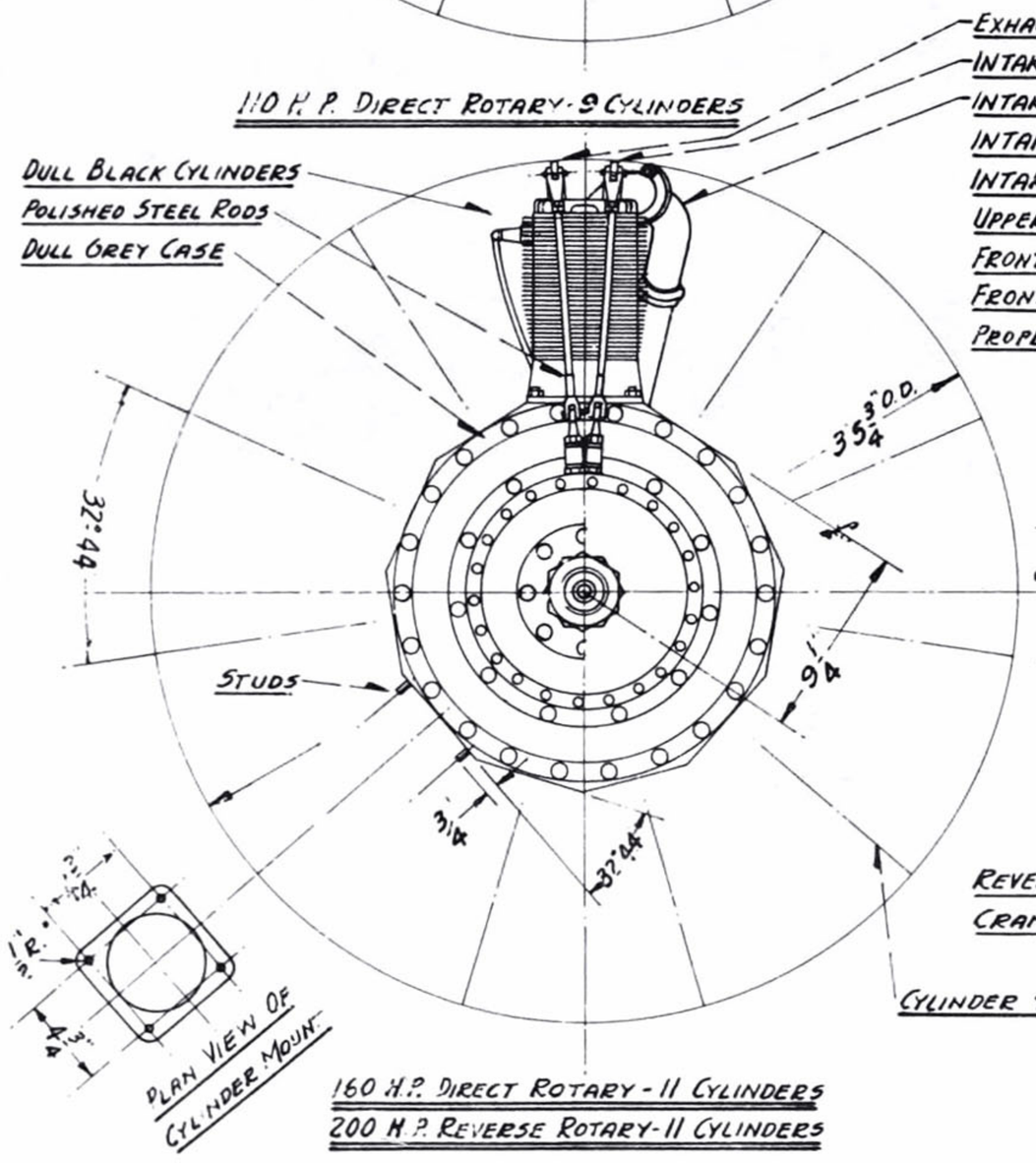

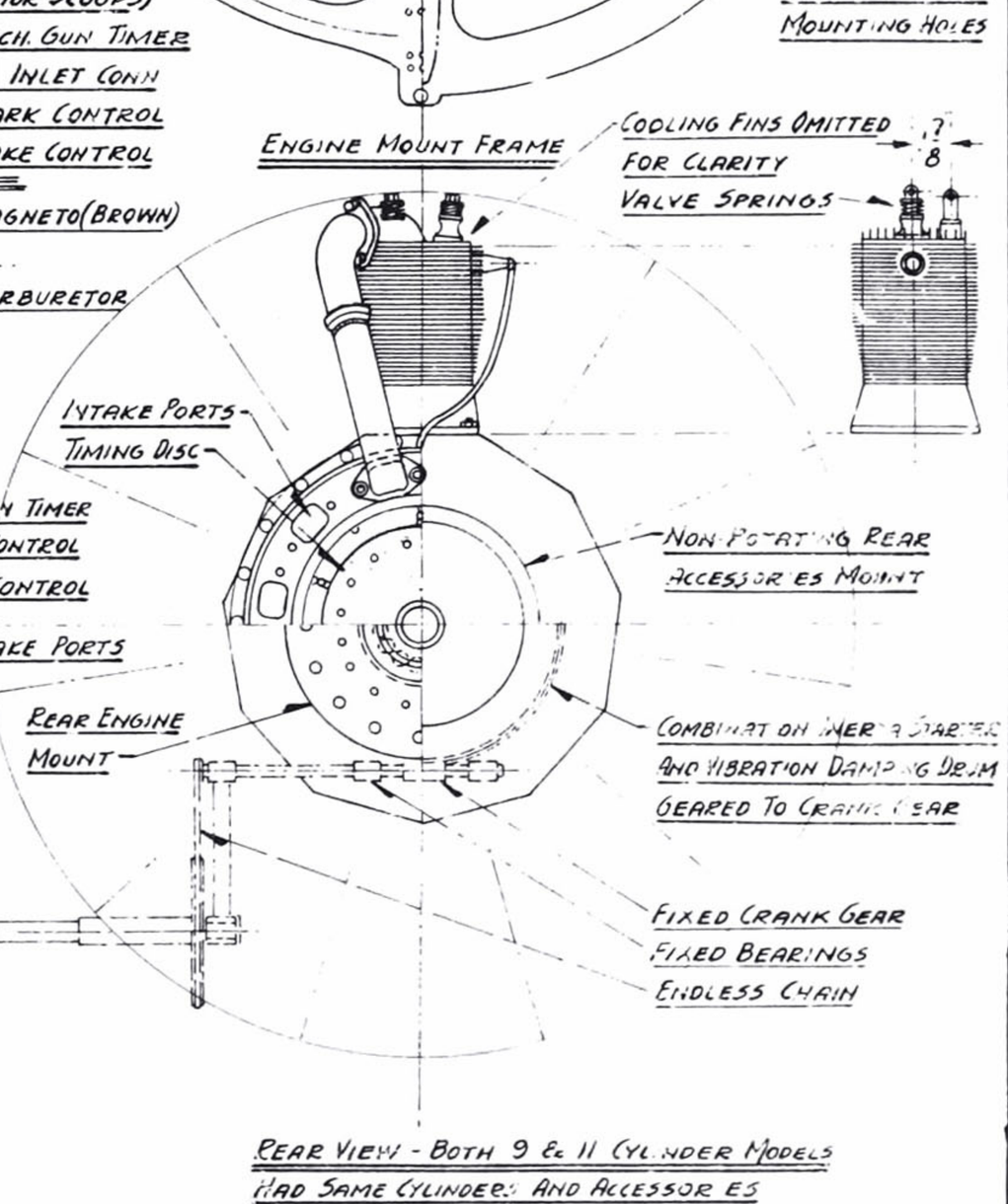

THE DIRECT ROTARY ENGINE ROTATES COUNTER-CLOCKWISE WITH PROPELLER GOING IN THE SAME DIRECTION. THIS WAS DUE TO THE PROPELLER SHAFT BEING RIGIDLY ATTACHED TO THE CRANKCASE (NOT TO CRANKSHAFT) THE REVERSE ROTARY ENGINE ROTATES CLOCKWISE; THE PROPELLER COUNTER-CLOCKWISE. THIS WAS DUE TO THE PROPELLER SHAFT BEING PART OF THE CRANKSHAFT. DIRECT ROTARY R.P.M. WAS 1200; REVERSE ROTARY R.P.M. WAS 900 FOR THE ENGINE, & 900 FOR THE PROPELLER.

THE AIR-SCOOPS WERE CONNECTED TO AIR-INTAKE PORTS BY DUCTS. THIS FEEDS AIR TO THE CARBURETOR; THE VAPOR ENTERS THE CRANKCASE THRU THE HOLLOW CRANKSHAFT. WHEN INTAKE VALVES OPEN. THE VAPOR WAS FORCED INTO THE CYLINDERS BY THE SUCTION STROKE OF THE PISTONS. EXHAUST MANIFOLD DETAILS ARE UNKNOWN. TO START ENGINE, MECHANIC TURNS PROPELLER BACKWARD; RELEASING THE INERTA DRUM. WHEN INERTA SPEED IS REACHED BY HANDCRANK, PILOT PULLS CLUTCH LEVER DRUM ENGAGES CLUTCH, AND TURNS ENGINE OVER.

AIR AGE INC., 551 FIFTH AVE., NEW YORK 17, N.Y.	
SCALE: 3/4" = 1'0"	GENERAL ARRANGEMENTS
DATE:	GERMAN ROTARY "SIEMEN HALSKE"
DRAWN BY ... W.A.WYLAM	SIEMENS

Lewis Machine Gun

drawing by WILLIAM WYLAM

AS IN ANY WAR, the unfortunate method of force comes from firepower or killing power. Early pilots of WW I observation aircraft soon discovered that they were sitting ducks for ground fire. Following a number of casualties, pilots began to carry side-arm weapons and even rifles. The concept of fixed guns on aircraft came as a result of the pilot's inability to fly his aircraft and fire his weapon with any authority by leaning over the side of his airplane. As this approach to aircraft weaponry developed, so did the need for faster firing guns. The Lewis Machine Gun, Model 1918, was an outgrowth of the infantry type machine gun used by ground personnel, and was attached with a flexible mount atop the wings of many Allied aircraft, as well as being located in the rear of the aircraft for use by an aerial gunner. Being fully automatic and gas-operated, the Lewis provided a formidable new fighting tool for the Allies in the air. □

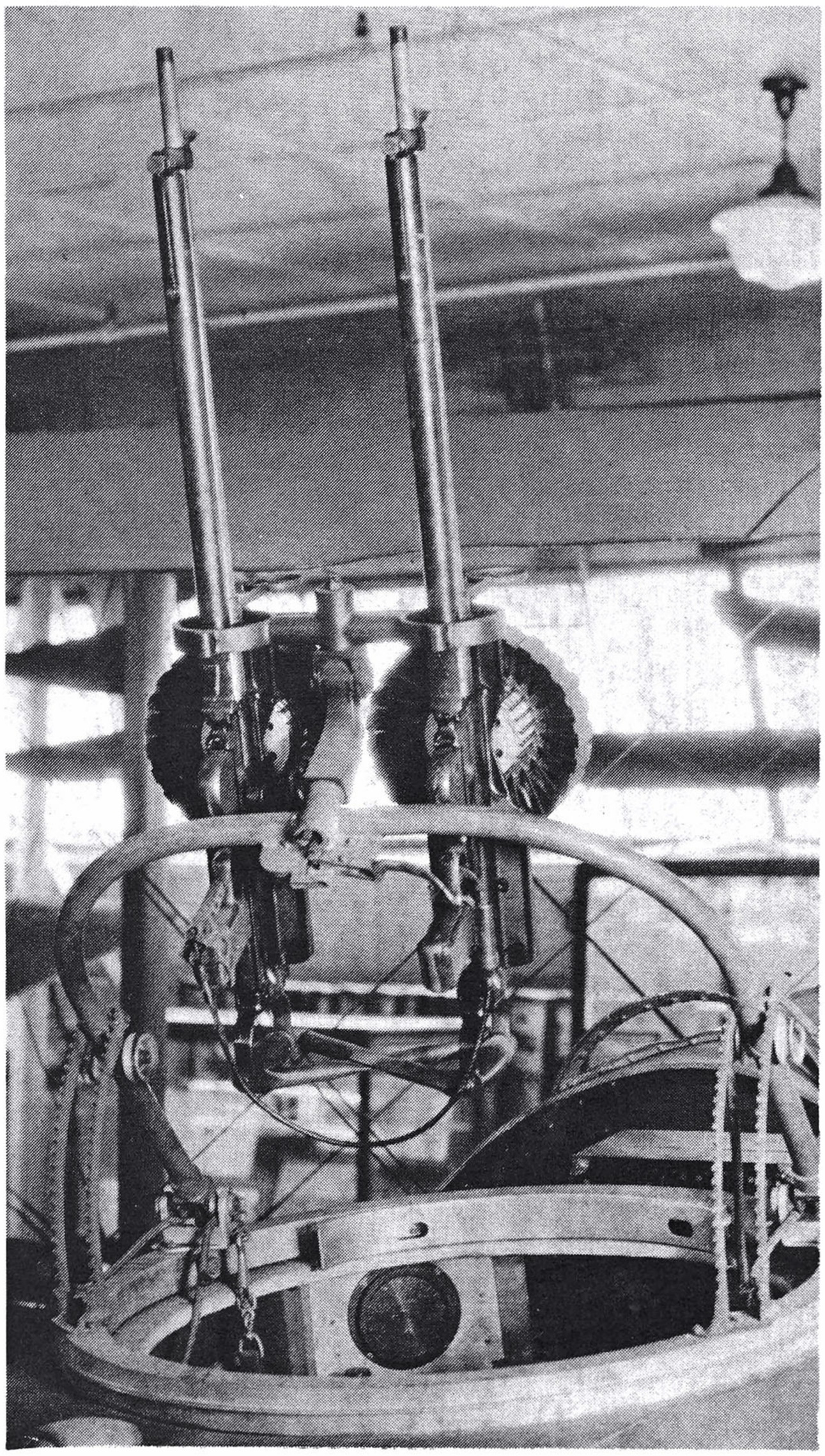

A pair of Lewises mounted on a Scarff ring in the rear cockpit. It is the same mounting as the one in the drawing.

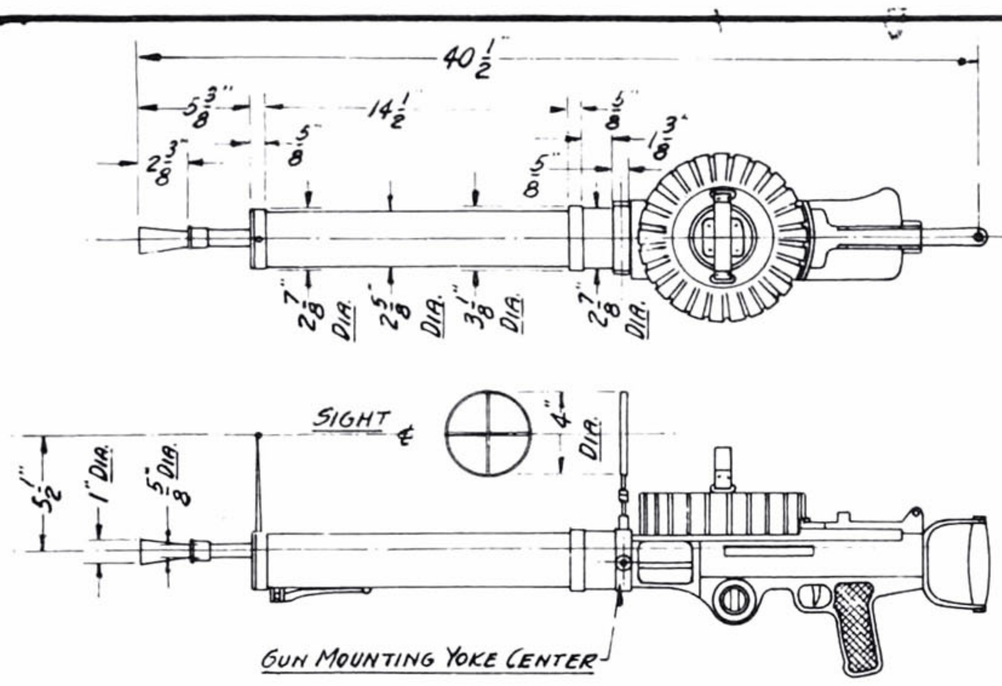

1915 LEWIS .30 CAL. AIRCRAFT MACHINE GUN

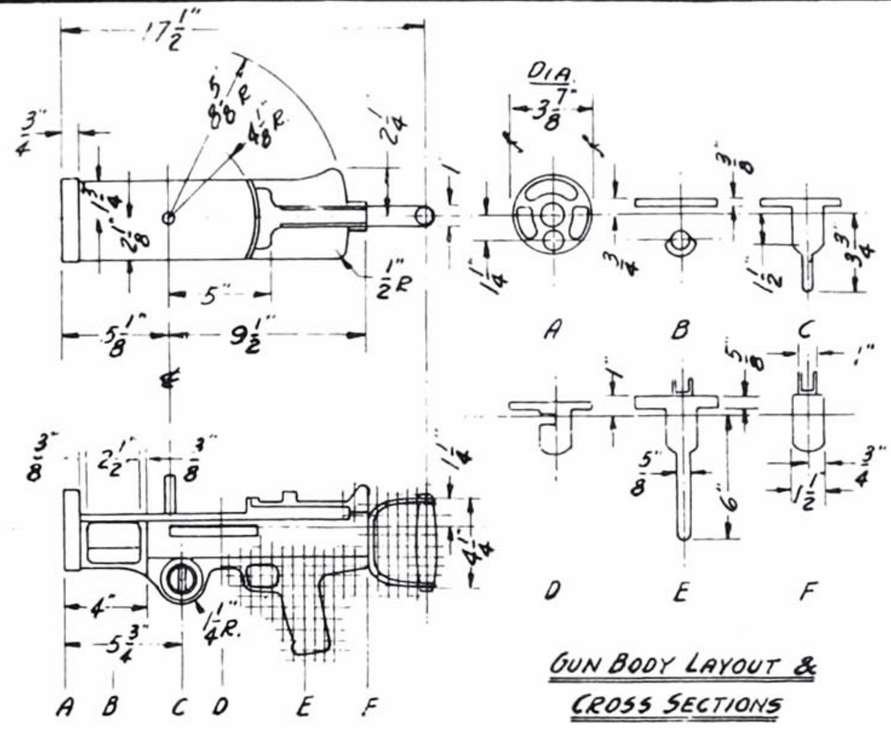

GUN BODY LAYOUT & CROSS SECTIONS

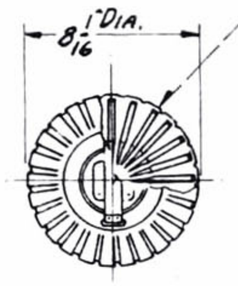

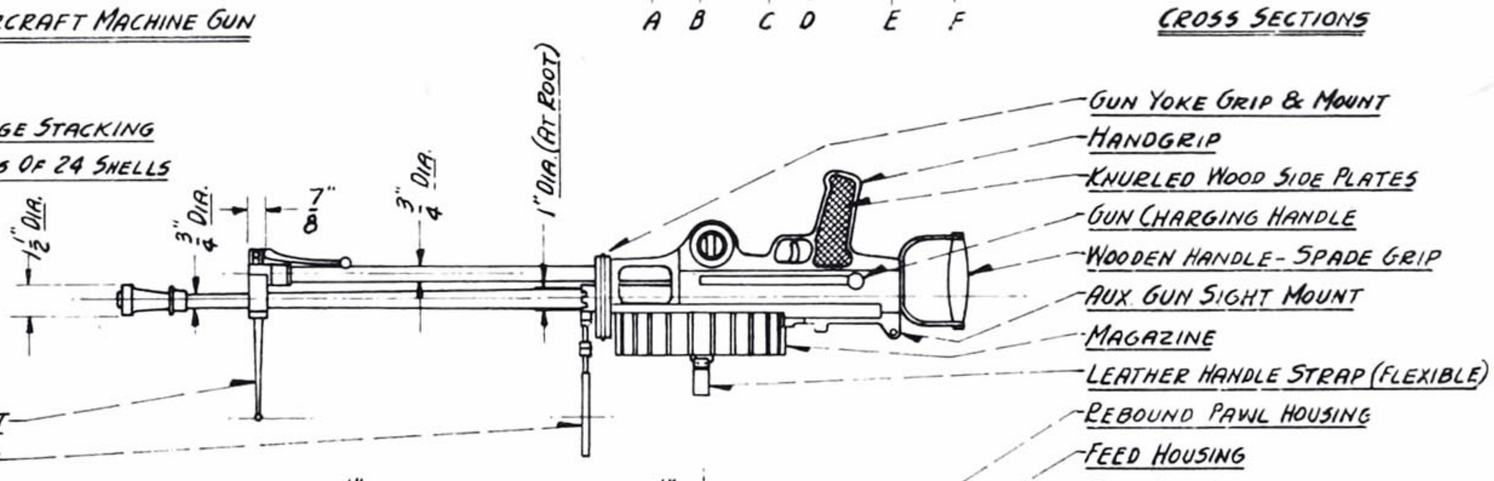

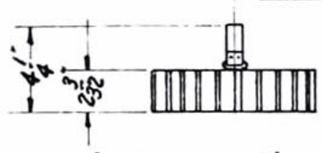

AMMUNITION MAGAZINE
STAMPED COPPER

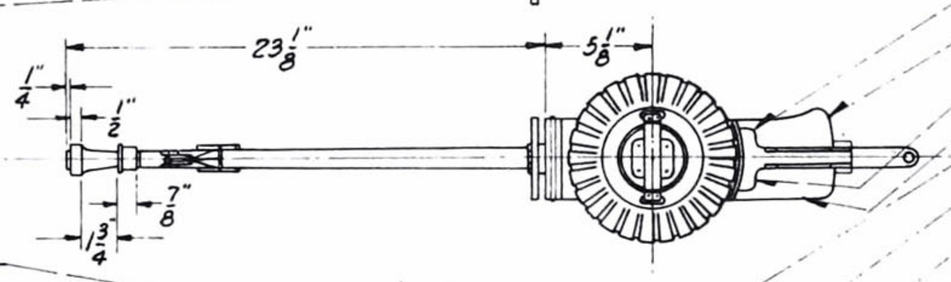

GUN YOKE GRIP & MOUNT
HANDGRIP
KNURLED WOOD SIDE PLATES
GUN CHARGING HANDLE
WOODEN HANDLE - SPADE GRIP
AUX. GUN SIGHT MOUNT
MAGAZINE
LEATHER HANDLE STRAP (FLEXIBLE)
REBOUND PAWL HOUSING
FEED HOUSING
STOP PAWL HOUSING
EJECTOR HOUSING
SIGHT ADJUSTMENT NUTS
BARRELS SUPPORT FRAME
EMPTY SHELL EXIS
MAINSPRING HOUSING
TRIGGER



FRONT VIEW

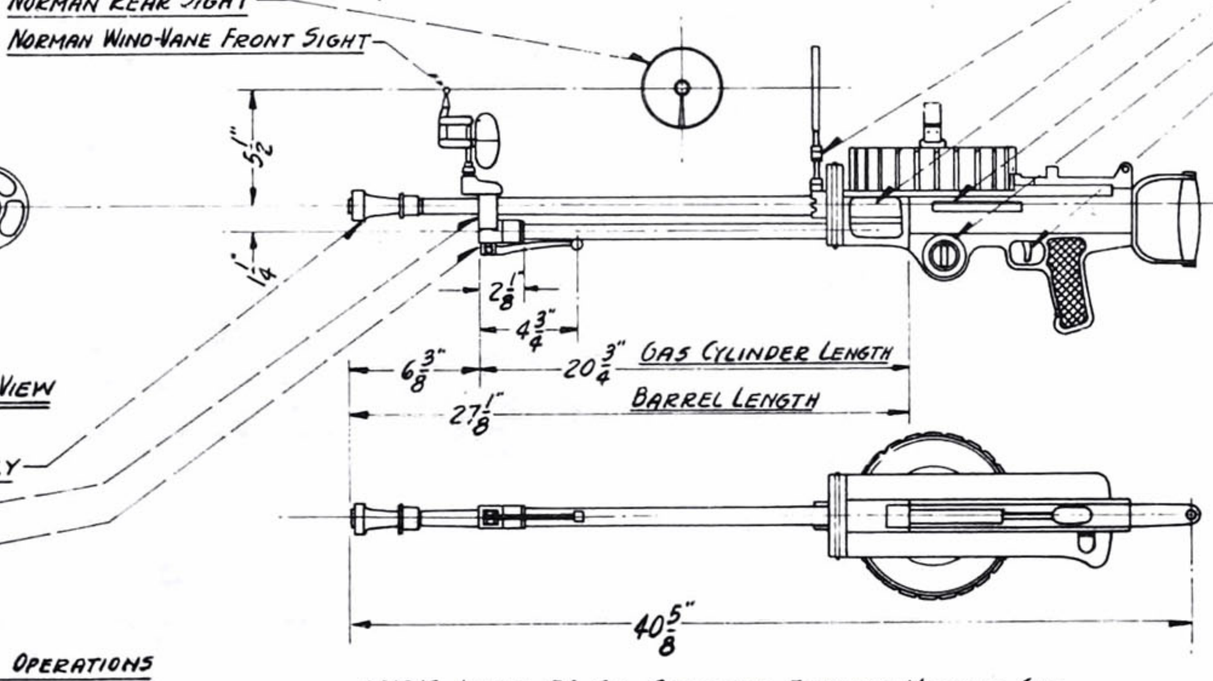

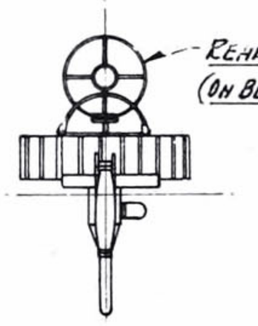

REAR VIEW

M1918 LEWIS .30 CAL. AIRCRAFT FLEXIBLE MACHINE GUN

NOTES ON LEWIS OPERATIONS

THIS TYPE OF MACHINE GUN WAS GAS OPERATED, FULLY AUTOMATIC, AND AIR COOLED. IT FUNCTIONS ON THE POWER PRODUCED BY THE EXPANSION OF GAS. THIS GAS WAS CREATED BY THE FIRING OF THE CARTRIDGE WHICH DRIVES THE BULLET OUT THRU THE BARREL. WHEN THE BULLET PASSED THE PORTHOLE IN THE GAS CHAMBER, THE GAS IS EXPANDED INTO A DRIVING FORCE. THIS DRIVES THE PISTON & SHAFT BACK TOWARD THE REAR. THIS BACKWARD MOVEMENT IN THE GAS CYLINDER CAUSED THE CARTRIDGE TO UNLOCK & TO DROP INTO THE HOLD, EXTRACT THE EMPTY SHELL CASE AND TO THROW IT OUT THRU THE EMPTY SHELL EXIS, ROTATE THE MAGAZINE; AND TO WIND UP THE MAINSPRING. THE FORWARD MOVEMENT OF THE PISTON & SHAFT WAS CAUSED BY THE MAINSPRING PRESSURE WHICH FEEDS AND LOCK THE CARTRIDGE IN THE FIRING CHAMBER; AND FIRES THE CARTRIDGE WHEN THE TRIGGER IS PRESSED.

NOTE:
LEWIS GUNS CAN NOT BE SYCHRONIZED FOR FIRING THRU PROPELLER. IT CAN BE USED ONLY FOR FREE OR FLEXIBLE MOUNTINGS.

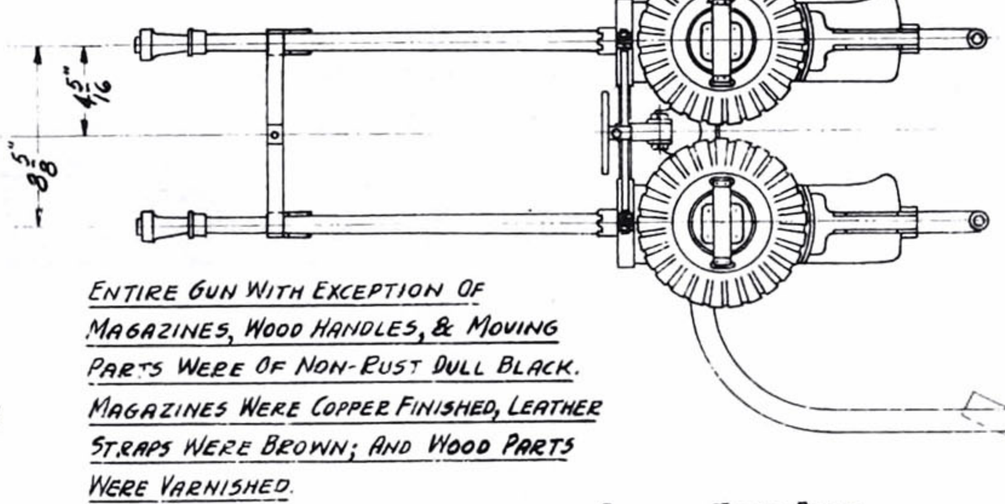

ENTIRE GUN WITH EXCEPTION OF MAGAZINES, WOOD HANDLES, & MOVING PARTS WERE OF NON-RUST DULL BLACK. MAGAZINES WERE COPPER FINISHED, LEATHER STRAPS WERE BROWN; AND WOOD PARTS WERE VARNISHED.

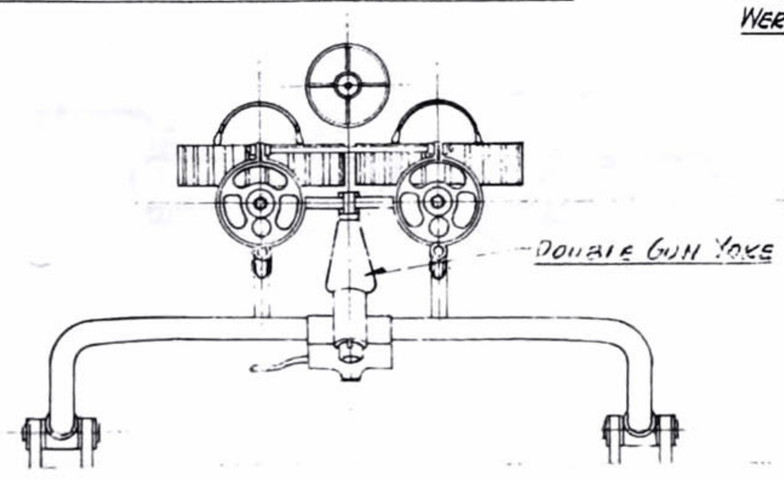

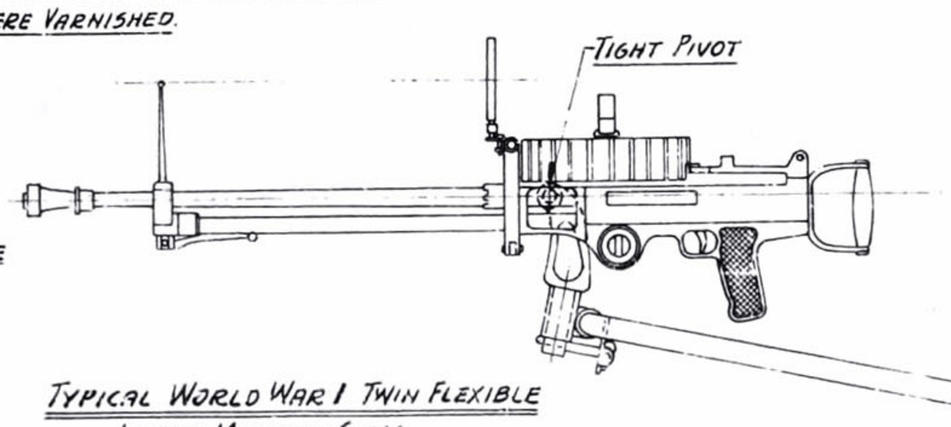

TYPICAL WORLD WAR I TWIN FLEXIBLE LEWIS MACHINE GUNS

SEE FEBRUARY 1946 MODEL AIRPLANE NEWS FOR DETAILS ON SCARFF RING MOUNT & YOKE.

AIR AGE INC., 551 FIFTH AVE., NEW YORK 17, N.Y.
SCALE: 3/4" = 1'-0"
DATE:
DRAWN BY ... W.A.WYLAM
GENERAL ARRANGEMENTS
30 CAL. AIRCRAFT MACHINE GUN
LEWIS

Vickers Machine Gun

drawing by WILLIAM WYLAM

THE FIRST experiments in arming an aircraft consisted of firing hand-held pistols and carbines. Machine guns were attached to the upper wings of scout biplanes, mounted at angles on the sides, pivoting on mountings in rear cockpits, or on pusher scouts like the D.H.2, fixed in front of the pilot. All these were awkward or dangerous: the obvious best location was in front of the pilot firing through the propeller of a tractor design.

At first, pilots tried mounting a single gun on the cowling and firing through the turning propeller, making holes in it occasionally. A surprising number of holes could be made before the propeller disintegrated!

Roland Garros put iron wedges around the base of his blades to deflect the bullets, but the vibration eventually destroyed the propeller. Fokker developed a mechanical synchronizer which interrupted the operation of the gun when the blade was in front of it, and soon after a better hydraulic system appeared. The Vickers took its place, first one only and then in pairs, on the cowls of most Allied aircraft. □

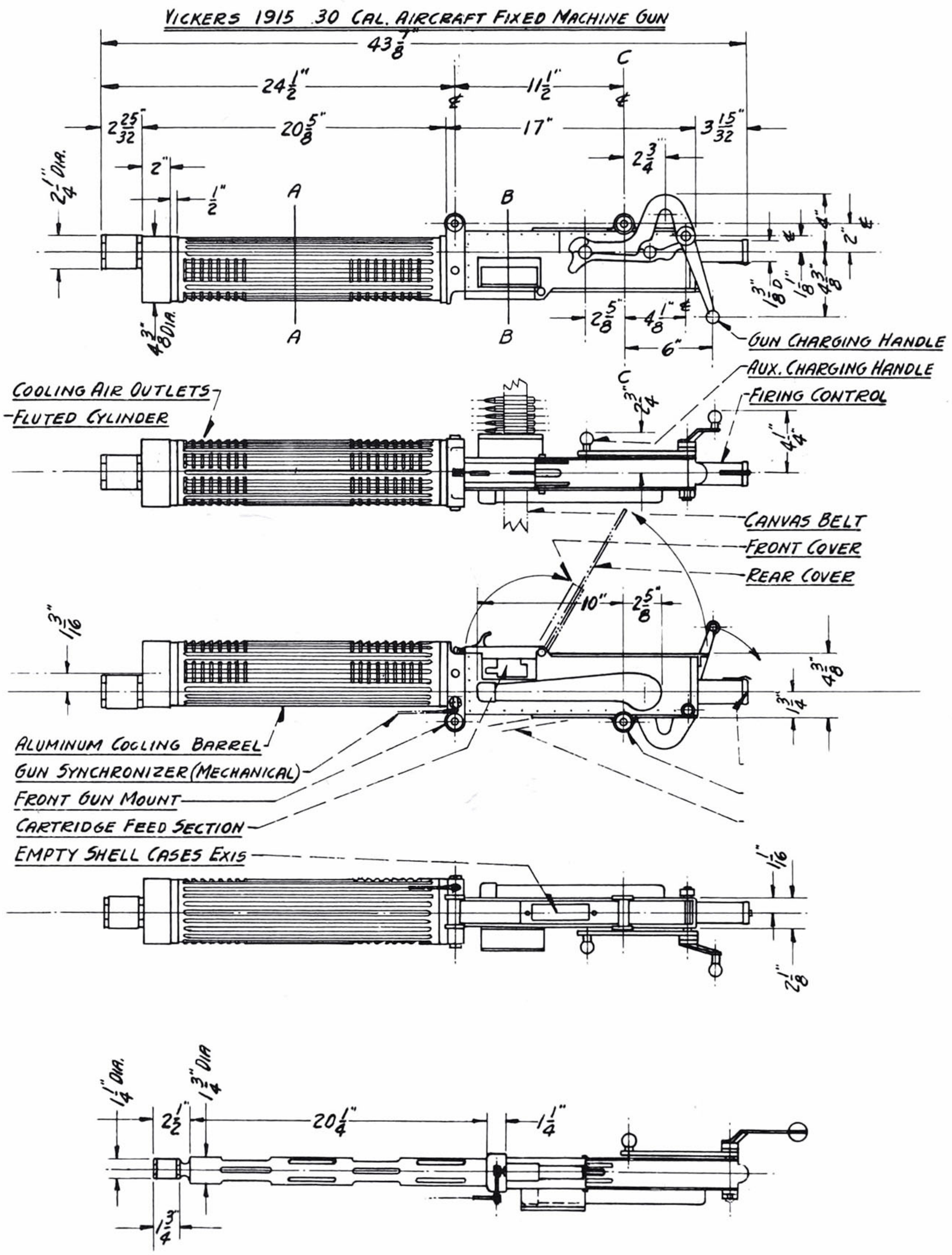

The Vickers, like the Lewis and the German Spandau, was developed from the earlier gun designed by Hiram Maxim.

VICKERS 1915 .30 CAL. AIRCRAFT FIXED MACHINE GUN

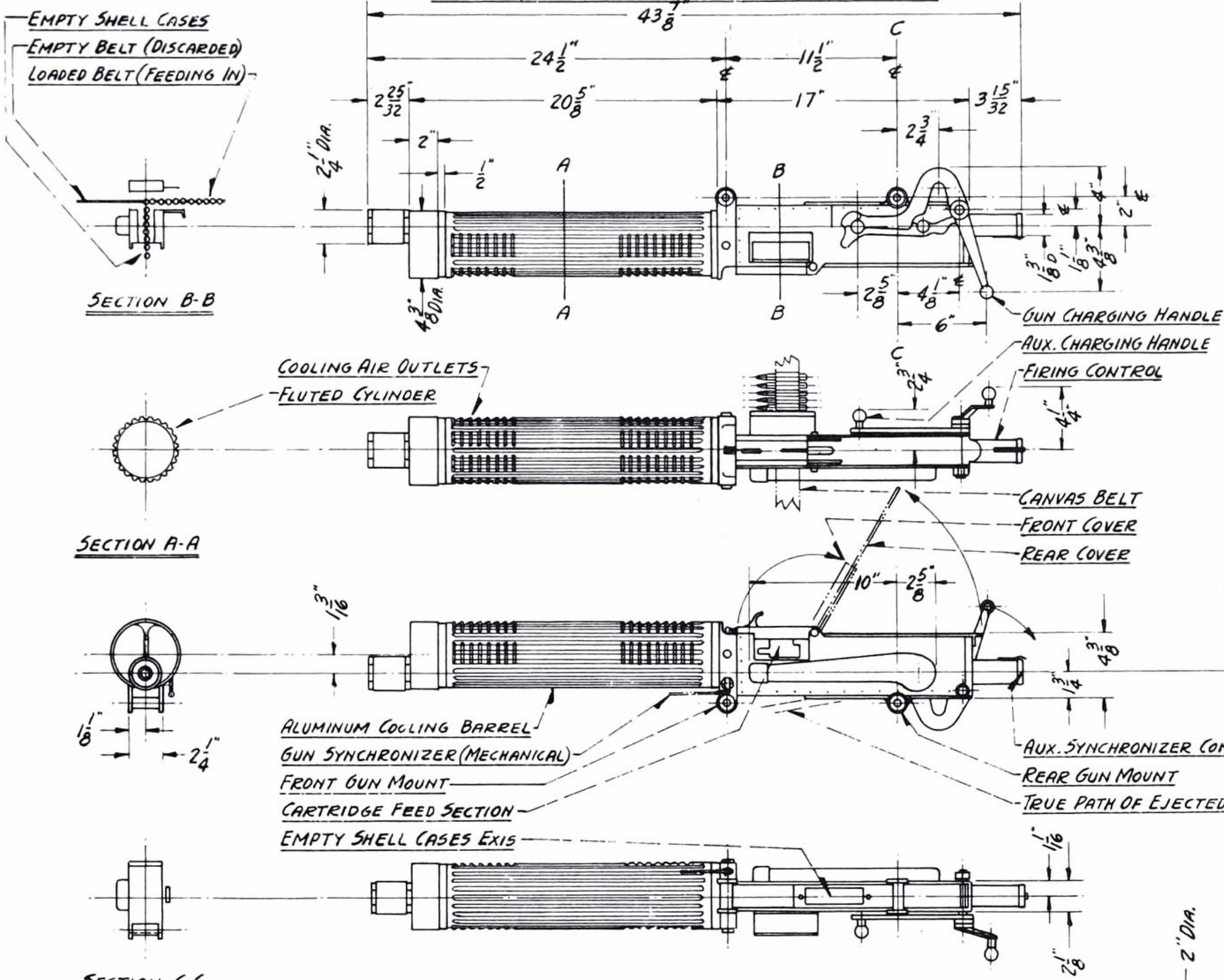

NOTE:
ENTIRE GUN WITH EXCEPTION OF STEEL MOVING PARTS (CHARGING UNIT) WAS DULL (ELECTROLYTIC) NON-RUST BLACK.

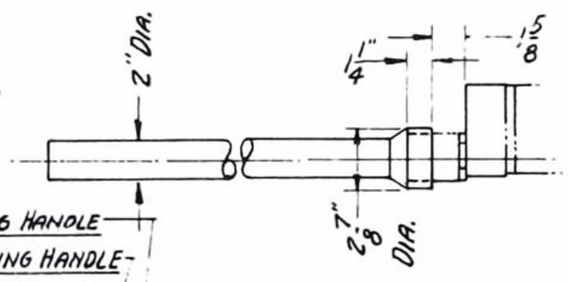

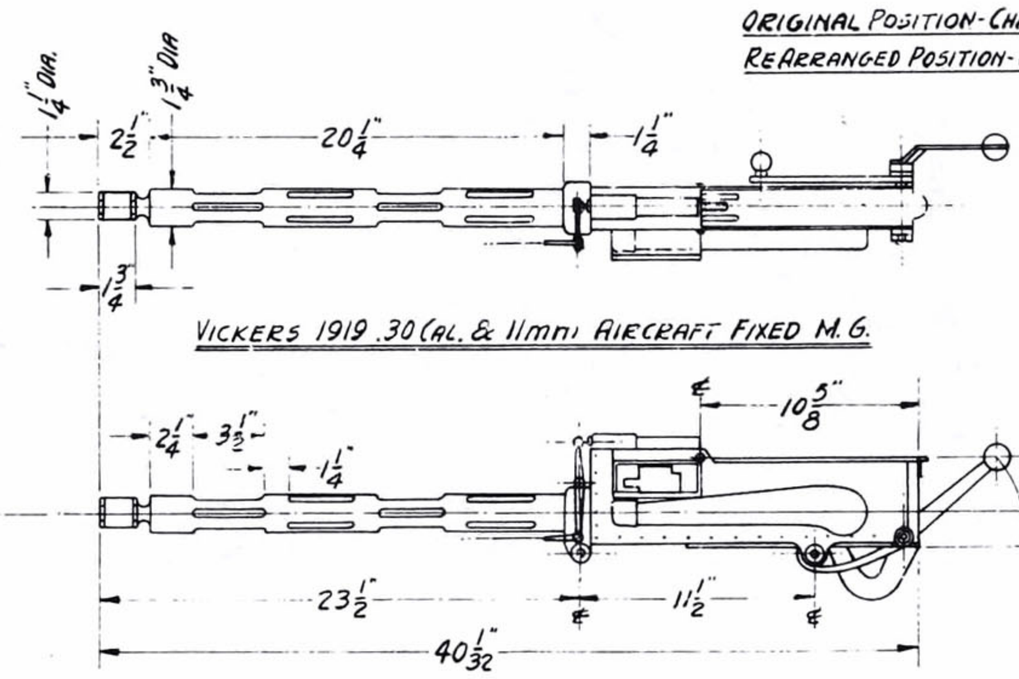

VICKERS 1919 .30 CAL. & 11MM AIRCRAFT FIXED M.G.

BLAST TUBE DATA

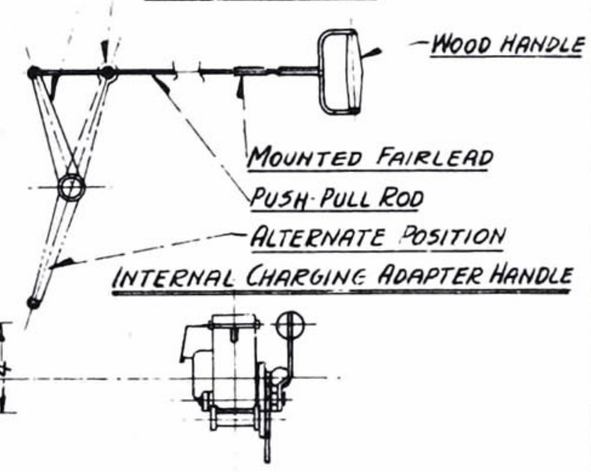

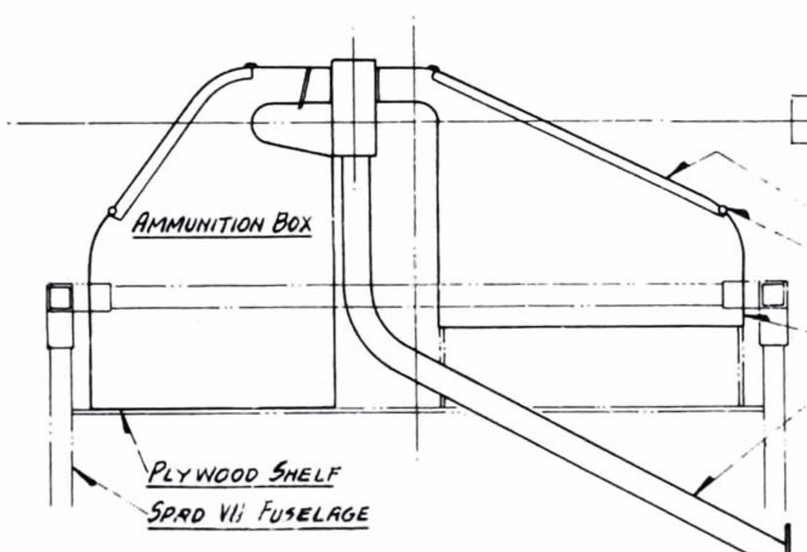

DETAILS OF GUN'S FEED AND DISCHARGE CASES

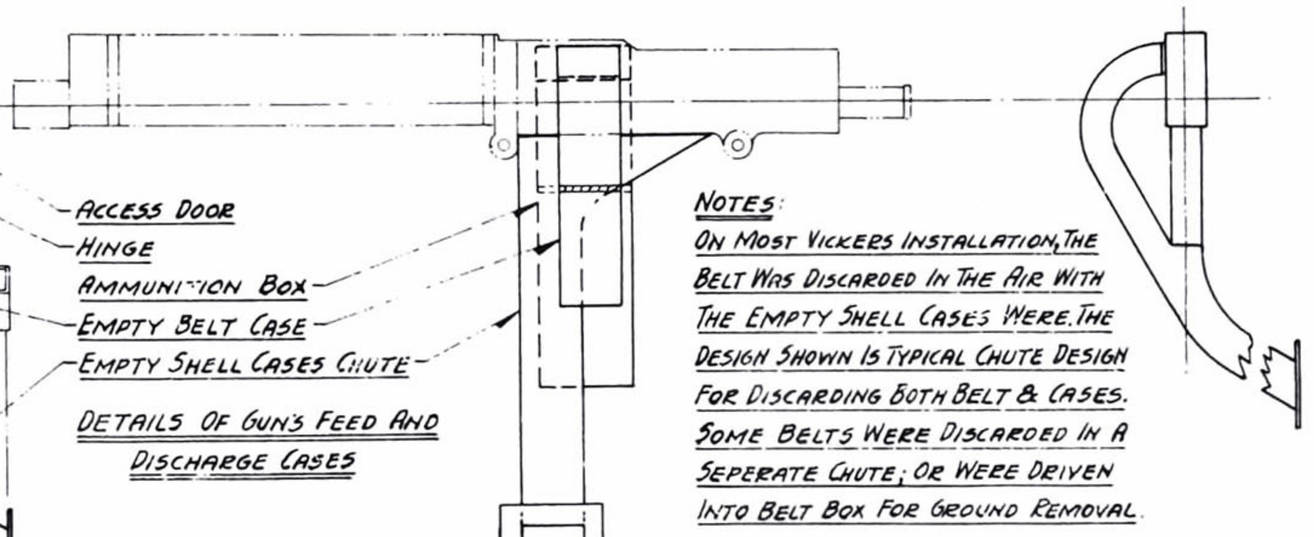

NOTES:
ON MOST VICKERS INSTALLATION, THE BELT WAS DISCARDED IN THE AIR WITH THE EMPTY SHELL CASES WERE. THE DESIGN SHOWN IS TYPICAL CHUTE DESIGN FOR DISCARDING BOTH BELT & CASES. SOME BELTS WERE DISCARDED IN A SEPERATE CHUTE; OR WERE DRIVEN INTO BELT BOX FOR GROUND REMOVAL.

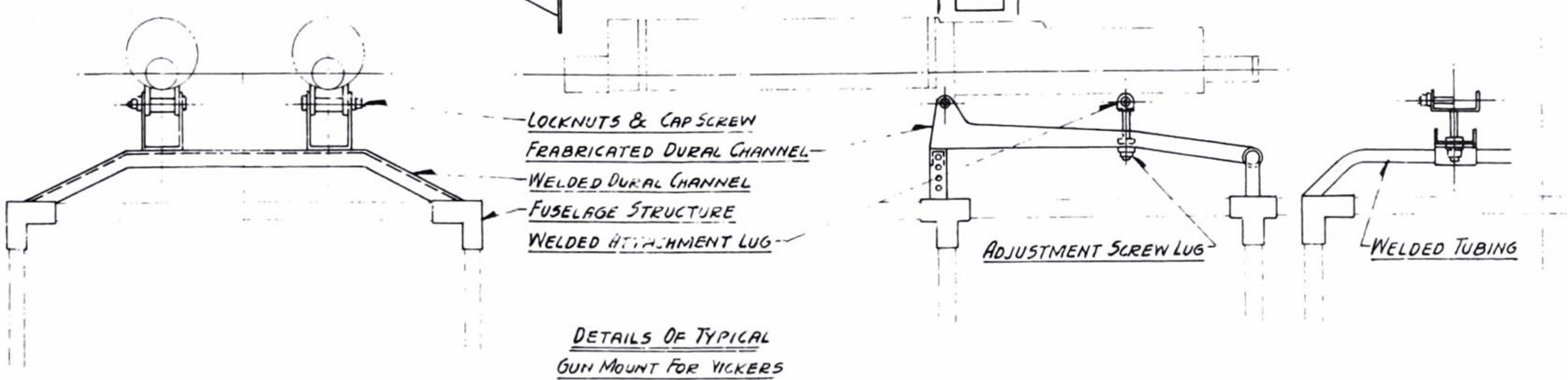

DETAILS OF TYPICAL GUN MOUNT FOR VICKERS

AIR AGE INC., 551 FIFTH AVE., NEW YORK 17, N.Y.
SCALE: 3/4" = 1'0"
DATE:
DRAWN BY ... W.A.WYLAM

GENERAL ARRANGEMENTS .30 & 11MM CAL. MACHINE GUNS

VICKERS

Air Bombs

drawing by WILLIAM WYLAM

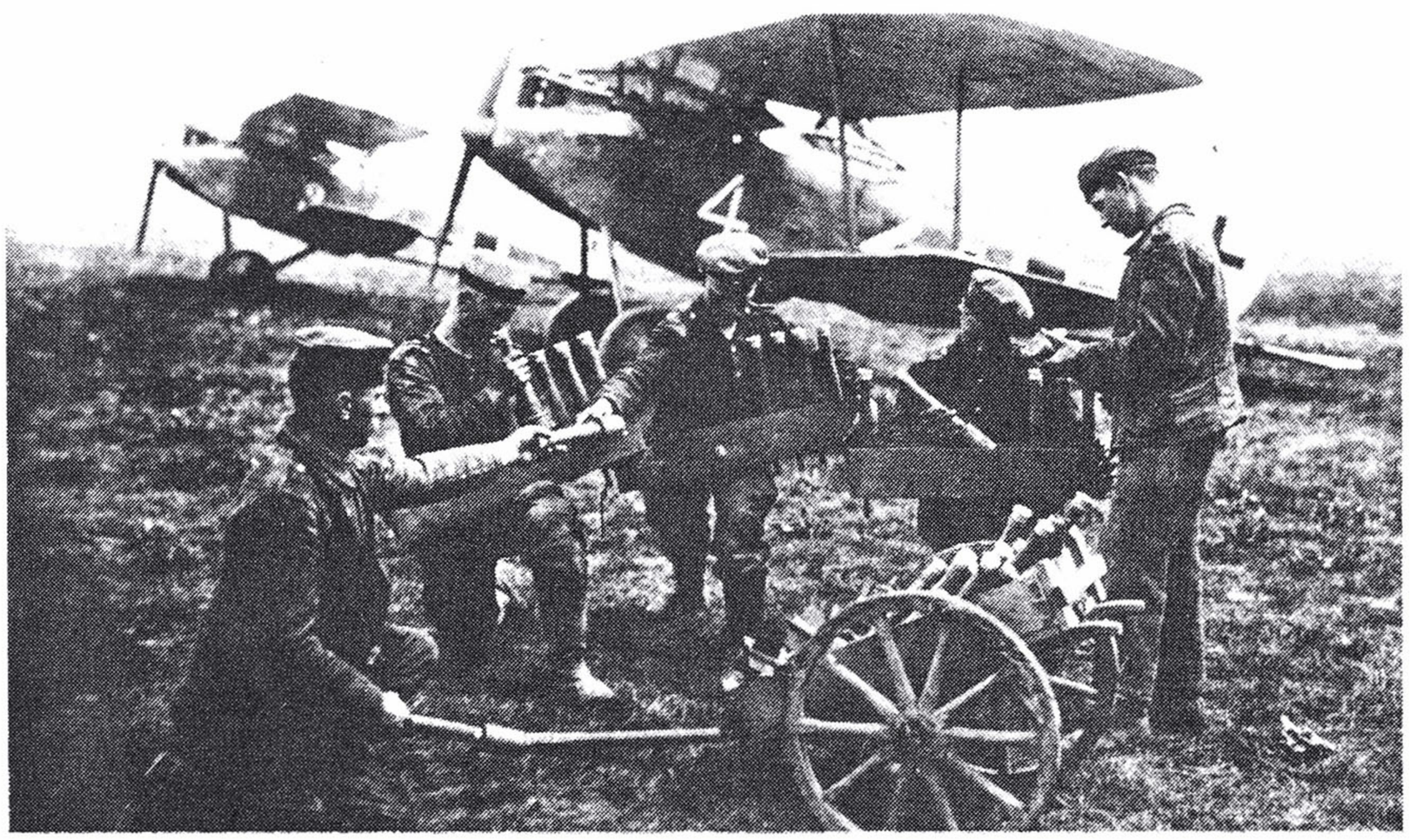

Bombs being loaded into German Halberstadt CL.II light bombers.

ONE OF THE FIRST bombs to fall from an aircraft on an enemy was a glass jar filled with petrol, nails, and powder. The airplane in war was seen as providing a better vantage point in observing enemy troop movements.

The first bombing equipment was nothing more than a pilot with a satchel with a few lightweight bombs made from artillery shells or hand grenades that he simply tossed over the side. Encouraged with this new way of creating havoc on the ground, aircraft were soon equipped with racks under the aircraft, a release mechanism in the cockpit for the pilot to activate, and even additional crew members to assume the tasks of gunner and bombardier.

Shortly after the end of WW I, General Billy Mitchell managed to sink a battleship in a test for the Navy using only bombs. □

AIR BOMBS

SCALE: 1" TO AN INCH

DRAWN WITH PERMISSION FROM U.S. ARMY VIA WAR DEPARTMENT.

DRAWN BY: W.A.W.YLAM

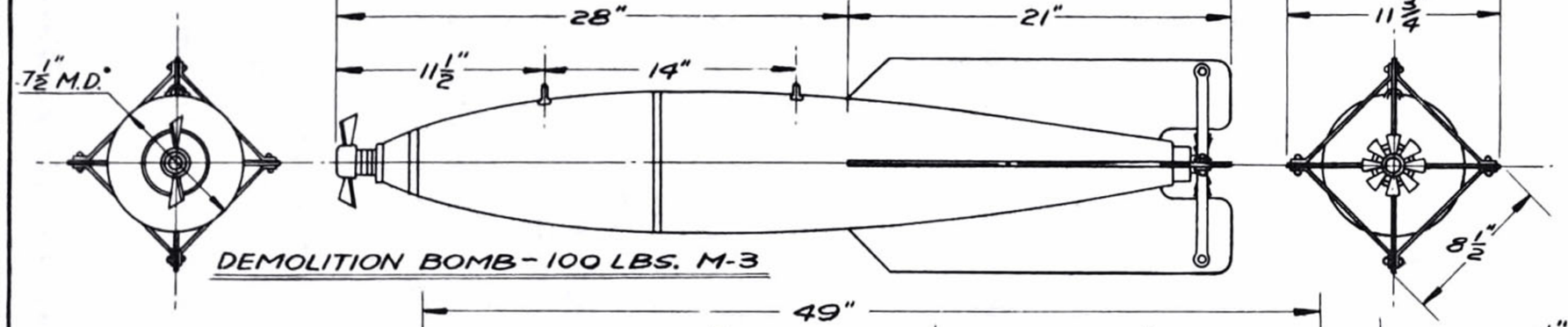

DEMOLITION BOMB - 100 LBS. M-3

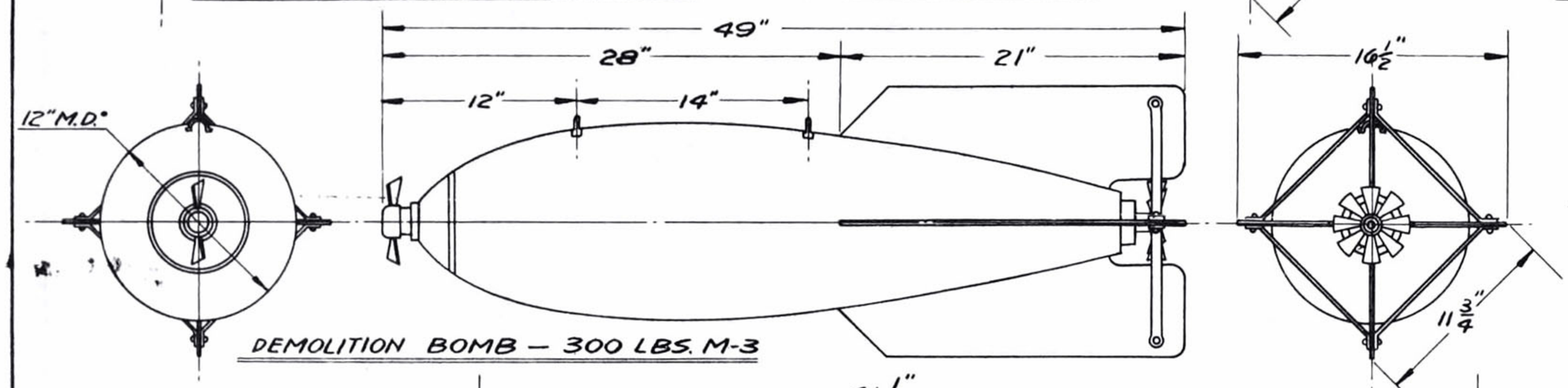

DEMOLITION BOMB — 300 LBS. M-3

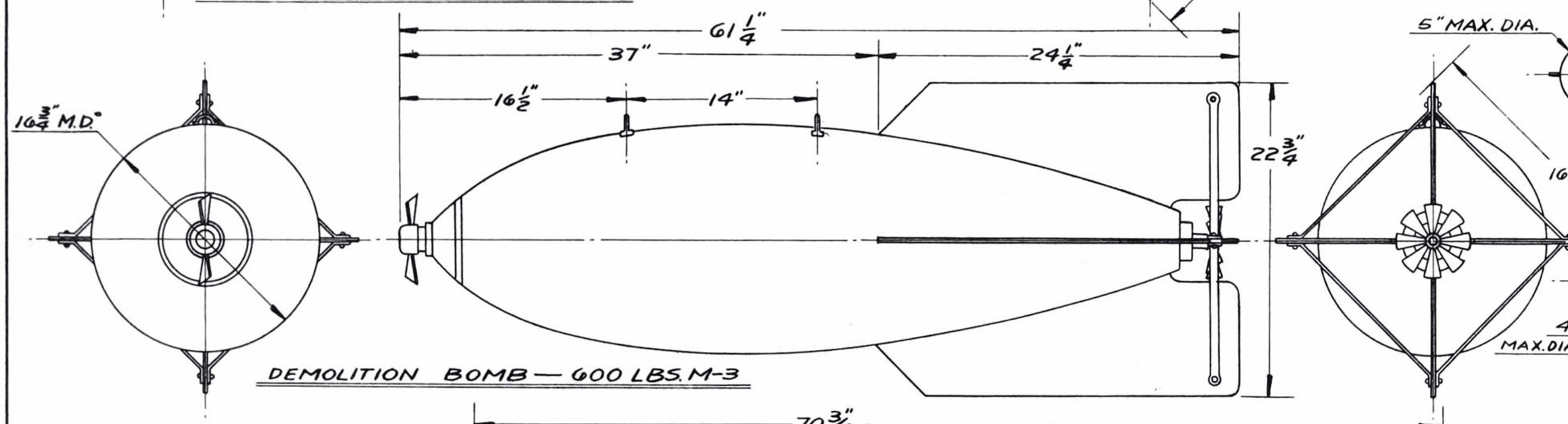

DEMOLITION BOMB — 600 LBS. M-3

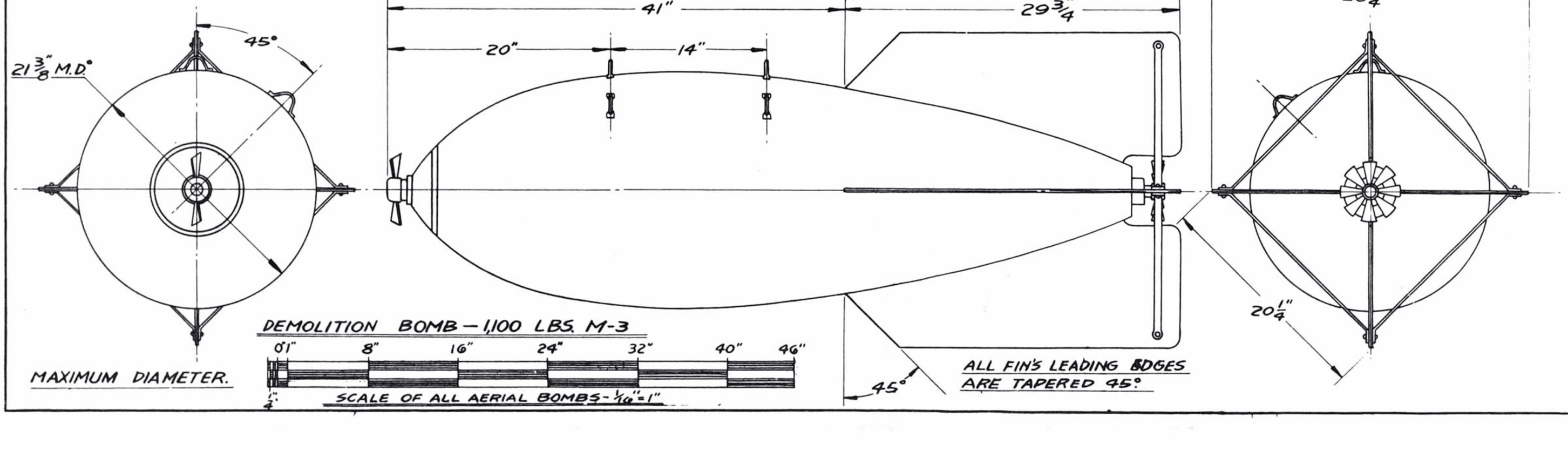

DEMOLITION BOMB — 1,100 LBS. M-3

MAXIMUM DIAMETER.

ALL FIN'S LEADING EDGES ARE TAPERED 45°

SCALE OF ALL AERIAL BOMBS - 1/16" = 1"

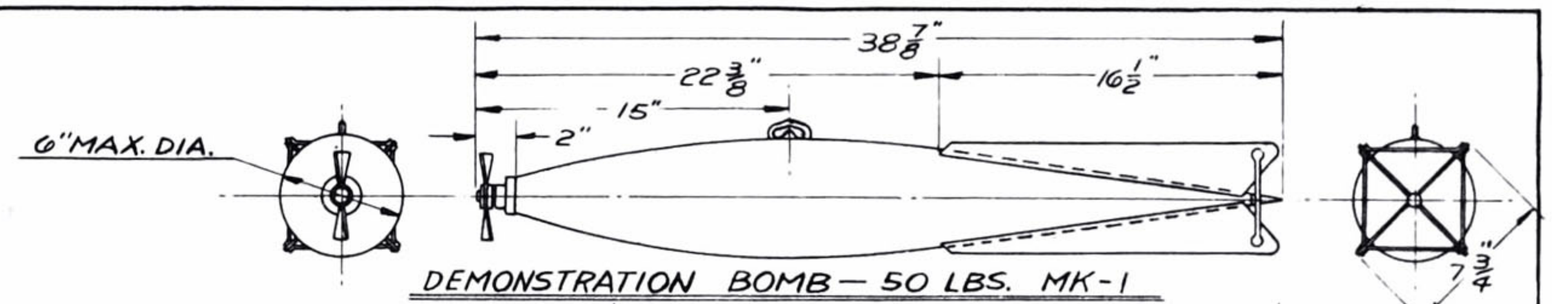

DEMONSTRATION BOMB — 50 LBS. MK-1

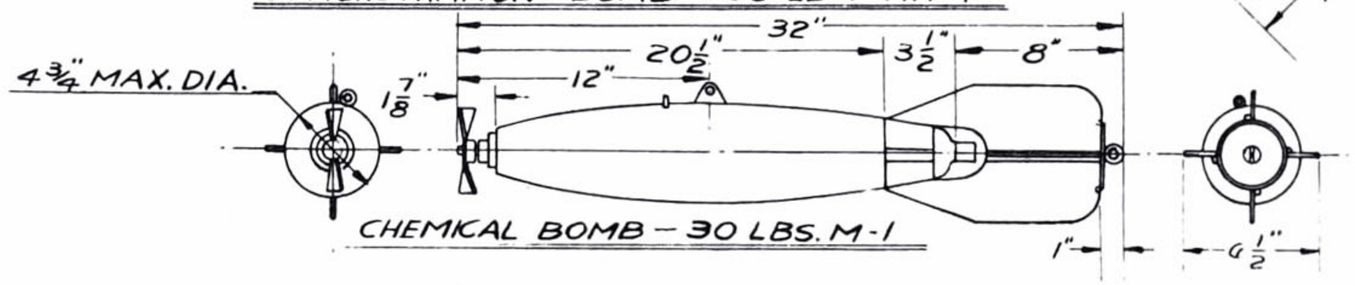

CHEMICAL BOMB — 30 LBS. M-1

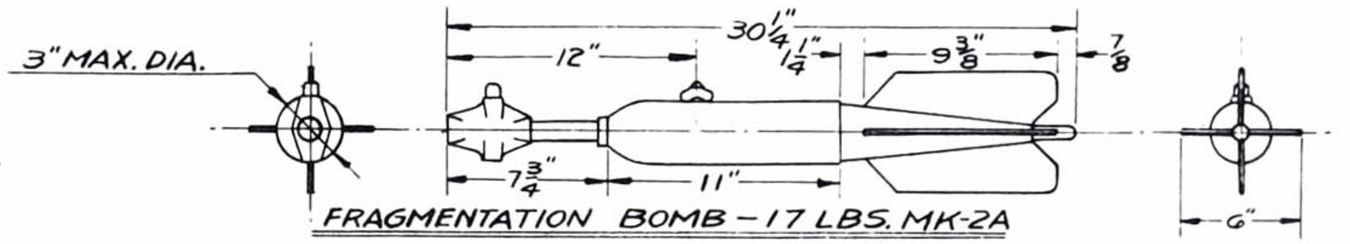

FRAGMENTATION BOMB — 17 LBS. MK-2A

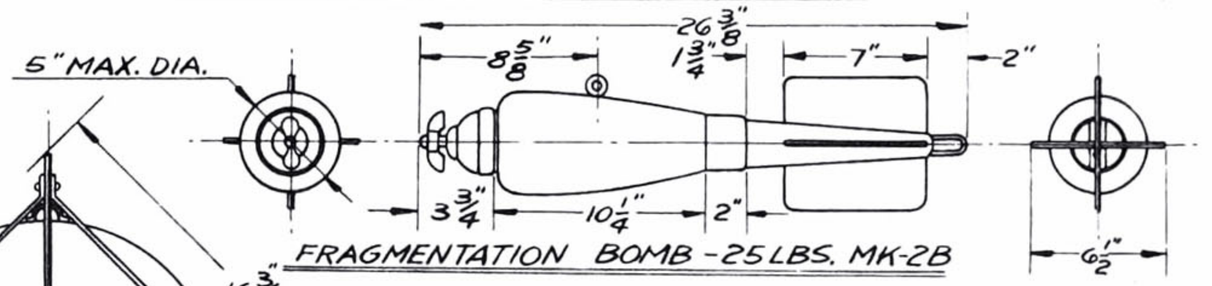

FRAGMENTATION BOMB - 25 LBS. MK-2B

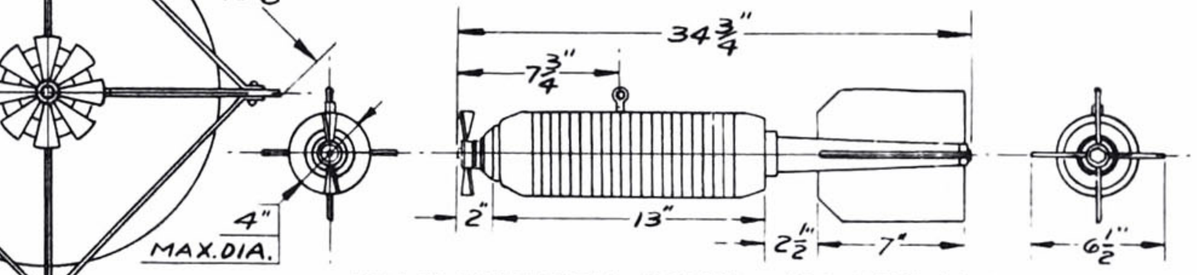

FRAGMENTATION BOMB — 30 LBS. M-5

Scale Drawings by Wylam and Nye

The scale drawings in this book (as well as many other fine scale drawings from the Model Airplane News archives) are available through the Model Airplane News Plans Service. The Wylam drawings are 17" x 21", and the Nye drawings are 22" x 34". Wylam drawings are $2.50 per sheet and Nye drawings are $3.50 per sheet.

William Wylam

($2.50 per sheet)

Name	No. Sheets
Albatros D-1 to D-6	8
Avro Lancaster 1	1
Beechcraft B17 to G17	10
Beechcraft 17 to A17	4
Bell P-59A Airacomet	1
Bell P-63A Kingcobra	2
Bleriot Channel Crosser XI	1
Boeing B-17G Flying Fortress	2
Boeing B-29 Super-Fortress	2
Boeing FB-1 to FB-6	4
Boeing F2B-1/Plotting Taper Rib Sections	4
Boeing F3B-1	4
Boeing F4B P-12	4
Boeing PW-9C to XP-7	4
Boeing 15 & XPW-9	4
Boeing C-97	2
Boeing XP-8	2
Bristol F-2B Brisfit Fighter	4
Consolidated A-11	1
Consolidated Catalina Dumbo PBY-5A	1
Consolidated B-24E Liberator	1
Curtiss Model A Biplane	1
Curtiss A-12 Strike	1
Curtiss SBC-3 Scout Bomber	2
Curtiss Export Falcon	1
Curtiss 33 & PW-8	4
Curtiss Helldiver F8C-4 02C-1	4
Curtiss Helldiver SB2C-1 USN or A-25	1
Curtiss Hawk P-6E/F11C-2 Hawk & Goshawk	4
Curtiss Hawk F6C Series	6
Curtiss Hawk F6C-1, 2, 3	2
Curtiss Hawk F6C-4	2
Curtiss Hawk III-C Export Type	3
Curtiss Hawk PW-8A/XF5C-1	4
Curtiss Hawk XP-23	1
Curtiss U.S.A. Hawk P-1 Series	4
Curtiss P-40D Wright Bros. Warhawk/Kittyhawk	2
Curtiss Sparrowhawk F9C-2	2
Curtiss Seahawk F7C-1	2
Curtiss Seahawk XF7C-3	1
Curtiss XF13C-1 & XF13C-2	1
DeHavilland DeH-4 Biplane	4
DeHavilland DeH-1	3
Douglas A-26 Invader, now B-26	1
Douglas C-54 Skymaster	2
Douglas O-46A USA Observation	3
small 4th sheet-50 cents	1
Fokker Pursuit Model D-16 & Wendell-Williams 57	1
Fokker Attack Bomber G-1	2
Ford Tri-motor 5-AT-C	4
Great Lakes Sport Trainer 2T-1A/2T-1E	2
Grumman F3F-1	3
Grumman F3F-2, changes-50¢, sm. sheet	1
Grumman F2F-1	1
Grumman Hellcat F6F-3	1
Henschel Hs-126 Observation	2
Lockheed Vega	4
Lockheed Sirius, Altair & Orion	4
Lockheed Hudson (England's) 3-view	2
Martin Marauder B-26D	2
Martin Maryland A-22	2
McDonnel XP-67	1
Messerschmitt Me-109J	2
Mitsubishi Betty OB-01	1
North American Mustang P-51B	1
Northrop X-A13	1
Northrop P-61 Black Widow	1
Pfalz D-3	4
Pfalz D-12	3
Piper Skycycle	1
Polish Fighter	1
Republic P-47D Thunderbolt	2
Seversky P-35	2
Siemens Schukert D-4	3
Sopwith Camel	3
Sopwith Dolphin 5F.1	4
Sopwith S.E.5A	3
Spad S.VII	3
Spad French S-XIII C.1	3
Spad S-X1A-2	4
Stinson Jr. Model S	2
Stinson Jr. Model R	2
Stinson Jr. Model SM-2	2
Stinson Jr. Model SM-2, S, R tail/wing detail	2
Stinson Reliant Model SR	2
Stinson Reliant SR-5	2
Stinson Reliant SR-6	2
Stinson Reliant Straight Wing	2
Stinson Reliant Gull Wing Series	10
Stinson Airliner Model T	2
Stinson Airliner Model U	3
Supermarine Spitfire II	2
Swift P-31	1
U.S. Army Attack A-17A	3
Vought SBU-1	2
Vought SB2U-1	2
Vought V-143	3
Vultee Swoose Goose XP-54	1
Waco Model C-6 & D-6	2
Wiley Post's Winnie Mae	1
Westland Lysander	4
Wright Bros. Model A	1
Wright Bros. Model B	1
Wright Bros. Original Flier	1

Engines and Miscellaneous

Name	No. Sheets
Cyclone F-51	3
Clerget	1
Hispano-Suiza	2
Mercedes (German) 160-180 HP	2
Pratt & Whitney Wasp Jr.	3
Wright Whirlwind	3
Lewis Machine Gun	1
Vickers Machine Gun	1
RAF S.E.-5 squadron markings & color detail	2
Air Bombs	1
Siemens-Halske Rotary Engine	1
Lycoming R-680	1

Willis Nye

($3.50 per sheet)

Name	No. Sheets
A.E.G. Type G-105	2
Ansaldo SVA-1	1
Antoinette VII	1
Bell P-59A	4
Boeing Mailplane 40B	4
Brunner-Winkle Bird Biplane	2
Chance Vought VE-7 & UO-1	4
Curtiss AT-9	4
Curtiss Falcon O-1/Lindbergh Mailplane	4
Curtiss Navy NC-4	4
Douglas Havoc Attack Bomber WWII	4
Douglas TBD-1	4
Douglas World Cruiser Type DWC	4
Friedrichshaffen Bomber G3	2
Gotha Bomber	4
Grumman Bearcat F8F-2	4
Grumman Hellcat USN Fighter F6F-5	4
Grumman Tigercat F7F-1	4
Grumman Wildcat F4F	4
Handley Page O/400	4
Hansa-Bradenburg Model LDD	2
Hawker Mark IIC Hurricane	4
Hawker Sea Fury XI FB-11 Navy Carrier	4
Helldiver USN Carrier SB2C-3	4
Loening US Amphibians Pts. I & II	8
Martin Mariner PBM-3C	4
Messerschmitt ME-262A	4
North American B-45	4
North American F-82E	4
Northrop P-61 Black Widow	4
Republic P-43	4
Supermarine Spitfire	4
Standard Model J	2
Thomas Morse S4E	4
U.S.S. Los Angeles	4
USAF B-26D (3-view)	1
U.S. Navy Patrol Bomber PV-1 Ventura	4
U.S. Navy Torpedo Bomber TBM-3	4

Model Airplane News' current **Plans Directory** of full-size model airplane plans is available for $2. This is a comprehensive list of plans with photographs from construction articles featured monthly in **Model Airplane News.** Each construction plan (and each scale drawing featured above) is an individually reproduced high-quality blueline print from the master mylar, which was made from the original drawing. Plans consist of one or more sheets and are reproduced professionally by the **Model Airplane News** Plans Service.

Scale Drawings by Other Great Aviation Illustrators

These drawings are of varying sizes and the prices are as marked.

1001 Alexander Eaglerock, J. Nieto, 2 sheets $4.00
1002 Armstrong-Whitworth F.K.8, B. Karlstrom, 1 sheet $3.00
1003 Bellanca Monoplane, J. Nieto, 2 sheets $4.00
1004 Boeing B-47E, Stratojet, B. Karlstrom, 1 sheet $3.00
1005 Boeing MB-3A, J. Nieto, 1 sheet $2.00
1006 Boeing N70700, 1 sheet $1.50
1007 Boeing P-26A, J. Nieto, 1 sheet $2.00
1008 Boeing Stearman PT-17 Kaydet, B. Karlstrom, 1 sheet $3.00
1009 Cessna O-1E Bird Dog, L. Halls, 4 sheets $16.00
1010 Cessna YAT-370, T. Larsen, 1 sheet $2.50
1011 Chance Vought OS2U-1, 2, 3 Kingfisher, T. Larsen, 2 sheets $4.50
1012 Chance Vought F8U-1 Crusader, B. Karlstrom, 1 sheet $3.00
1013 Chance Vought SB2U Vindicator, H. Farrell, 1 sheet $3.00
1014 Commonwealth Aircraft CA-15 Fighter, L. Halls, 4 sheets . $20.00
1015 Comper Swift, B. Karlstrom, 1 sheet $3.00
1016 Curtiss JN-4 to JN-6H, J. Nieto, 4 sheets $8.00
1017 Curtiss R3C-1 and R3C-2 (1925 Racer), J. Nieto, 1 sheet $2.00
1018 Curtiss Wright Jr. Amphibian, B. Karlstrom, 1 sheet $3.00
1019 Curtiss Robin Monoplane, J. Nieto, 2 sheets $4.00
1020 Dewoitine D-27-C.1 (1927), B. Karlstrom, 1 sheet $3.00
1021 Entwicklungsring Sud VJ 101C, T. Larsen, 1 sheet..... $2.50
1022 Fairchild PT.26 Cornell, T. Larsen, 1 sheet..... $2.50
1023 Focke-Wulf FW-190A3 and A5, B. Karlstrom, 1 sheet $3.00
1024 Fokker D-VII, J. Nieto, 4 sheets $8.00
1025 Fokker DR-1, J. Nieto, 2 sheets $4.00
1026 Fokker EV/DVIII, P. Drews, 4 sheets $8.00
1027 Folland Aircraft FO 139 Midge, B. Karlstrom, 1 sheet $3.00
1028 Ford Air-Transport Stout 2-AT, 1 sheet $3.00
1029 Franklin Sport "A" Biplane (1930), R. Anderson, 3 sheets .. $6.00
1030 Gloster Gauntlet, T. Larsen, 1 sheet $3.00
1031 Gloster Gladiator, 1 sheet $1.25
1032 Gloster Sea Gladiator Faith, C. Graham, 1 sheet..... $2.00
1033 Grumman F6F Hellcat, B. Karlstrom, 1 sheet..... $3.00
1034 Grumman F-14 Tomcat, T. Larsen, 2 sheets $6.00
1035 Grumman XF5 F-1 Skyrocket, T. Larsen, 2 sheets $5.00
1036 Hansa-Brandenburg W.29 (HM.T), T. Larsen, 2 sheets $6.00
1037 Hawker Dankok (L.B. II), T. Larsen, 2 sheets $4.50
1038 Hawker Nimrod, T. Larsen, 3 sheets..... $7.00
1039 Heinkel 64C, T. Stark, 1 sheet $1.00
1040 Heinkel He.8 (h.m. II), T. Larsen, 2 sheets $4.00
1041 Heinkel He.51, T. Larsen, 2 sheets..... $4.50
1042 Hughes XF-11, L. Halls, 4 sheets $16.00
1043 Junkers D-1 (1918), C. Graham, 1 sheet $2.25
1044 Kawasaki Ki.61-Ib Tony, C. Graham, 1 sheet..... $2.00
1045 Leduc 0.22, B. Karlstrom, 1 sheet $1.00
1046 Lockheed F-94C Starfire, B. Karlstrom, 1 sheet $3.00
1047 Loening M-8, T. Stark, 2 sheets $4.00
1048 Loving-Wayne Racer WR-1, L. Wieczorek, 1 sheet..... $2.00
1049 McDonnell F4H-1 Phantom II, B. Karlstrom, 1 sheet..... $3.00
1050 MiG-19 Farmer Day Interceptor, C. Graham, 1 sheet $2.00
1051 Mitsubishi Type Zero or "Zeke," C. Graham, 1 sheet $1.50
1052 Nakajima KL-84 Frank, C. Graham, 1 sheet..... $3.00
1053 Nieuport Nighthawk, J. Nieto, 2 sheets $4.00
1054 North American YAT-28E, H. Farrell, 2 sheets..... $6.00
1055 Pfalz Scout Type D-XII, B.R.F., 1 sheet $1.50
1056 Republic P-47 Thunderbolt, B. Karlstrom, 1 sheet $3.00
1057 Ryan NYP Spirit of St. Louis, B. Karlstrom, 2 sheets $6.00
1058 Saab AJ-37, T. Larsen, 2 sheets..... $6.00
1059 Salmson 2A2 (1917-1918), R. Anderson, 2 sheets $4.00
1060 S.E.5a, J. Knoepel, 1 sheet $3.00
1061 Shoestring Racer, L. Halls, 2 sheets $6.00
1062 Siren C-30 Edelweiss, L. Halls, 2 sheets..... $8.00
1063 Sopwith Snipe 7F-1, J. Nieto, 2 sheets $4.00
1064 Stinson Reliant Model SR-10G, K. Wilson, 3 sheets $12.00
1065 Thomas-Morse MB-3, J. Nieto, 1 sheet..... $2.00
1066 Travel Air 2000, J. Nieto, 2 sheets..... $4.00
1067 Travel Air 6000, J. Nieto, 2 sheets..... $4.00
1068 Waco 240A, J. Nieto, 1 sheet $2.00
1069 Waco CTO Taperwing (B. Lyjak's 1929), K. Wilson, 3 sheets $9.00
1070 Westland Whirlwind, T. Larsen, 1 sheet..... $2.50
1071 Zaunkonig (Wren), B. Karlstrom, 1 sheet..... $3.00
1072 Zlin 526A and 526 AS Akrobat, L. Halls, 4 sheets..... $16.00

Instructions for Ordering Drawings

Payment Information:
All orders must be prepaid. Foreign orders, payment must be in U.S. funds drawn on a U.S. bank or by an International Money Order. CT residents add 7½% sales tax. MasterCard, Visa, and American Express orders accepted. Please state card number and expiration date. Minimum credit card order is $15. All sales are final. All prices subject to change.

Postage and Handling Information:

- ☐ **United Parcel Service:** Add $3.75 for an unlimited amount of rolled drawings per tube. (If undeliverable by UPS, plans will be shipped through the U.S. Post Office. Please provide a street address for UPS shipment.)
- ☐ **Third Class Folded:** Add 15% of order (allow up to three weeks for delivery).
- ☐ **Foreign Airmail:** Add $3.00 for up to three sheets. Add $1.00 per sheet for each additional sheet.
- ☐ **Foreign Surface Mail:** Add $1.50 per sheet for up to three sheets. Add $.50 per sheet for each additional sheet.

MODEL AIRPLANE NEWS **251 DANBURY RD., WILTON, CT 06897** **203-834-2900**

CREDIT CARDS ONLY (Mon.-Fri. 8a.m.-6p.m.) CALL 800-243-6685

INFORMATIVE MODELING BOOKS...

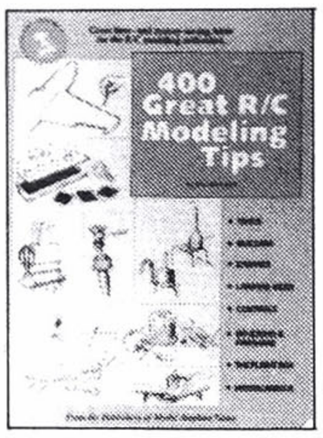

400 Great R/C Modeling Tips–

by Jim Newman. Contains a tremendous wealth of modeling tips for the radio-control enthusiast. This is one book the active modeler should have in his workshop, and it's also great for beginners 9.95*

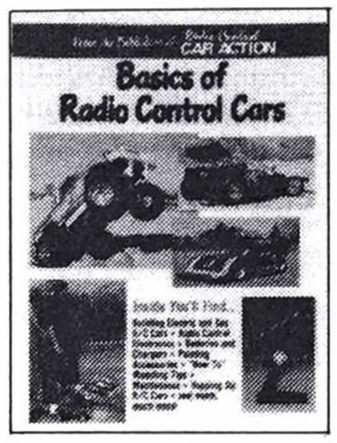

Basics of Radio Control Cars –

by Doug Pratt and R/C Car Action editors. Covers the whole gamut of R/C electric and gas car modeling. Includes building, modifications, chargers, R/C electronics, and more $9.99*

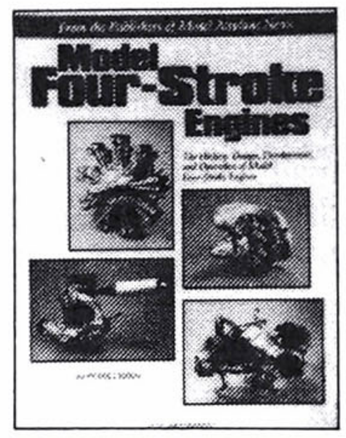

Model Four-Stroke Engines –

by Peter Chinn. The history, design, development, and operation of four-stroke engines. Also, all the different four-strokes, including opposed twins, radials, wankels and conventionals $13.95*

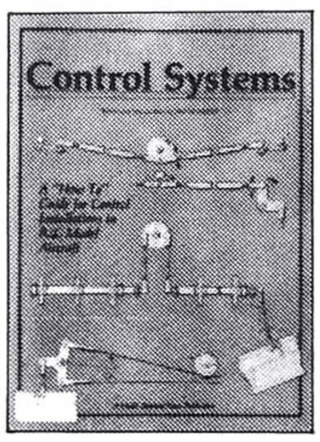

Control Systems -

by Jim Newman. How to install control-system hook-ups. Good for new construction or for modifying your existing flying model $4.95*



Gas Engines

Best of the Golden Oldies construction and technical articles of the '30s and '40s. A collector's book $5.00*

TO ORDER BOOKS, write: Air Age Publishing, 251 Danbury Rd, Wilton, CT 06897 with your check or money order payment. For credit card orders, **call toll-free, 1-800-243-6685.**

* Please add postage and handling to your order. In the U.S., add $1.75 per book. Foreign orders (including Canada and Mexico), add $2.75 per book. Foreign payment must be made in U.S. funds, drawn on a U.S. bank, or by international money order. For foreign airmail, add $5.50 per book. Connecticut residents, add 8% sales tax. Minimum credit card order of $10.

. . . AND DYNAMIC R/C MAGAZINES



Model Airplane News

The world's premier R/C modeling magazine. Each month offers R/C construction articles; engine, kit, and product reviews; plus beginner and advanced modeling information. Loaded with color photos. One-year subscription– $24.95.** Two years – $45.95.**

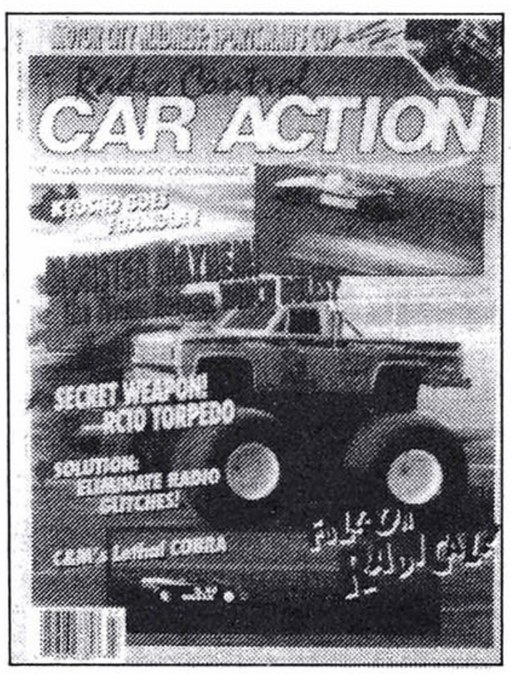

Radio Control Car Action

Issued monthly, this is the hottest R/C Car magazine available. All scales of gas and electric cars, product reviews, and "how-to" information. Colorful, informative, and dynamic. One-year subscription– $24.95.** Two years– $45.95.**

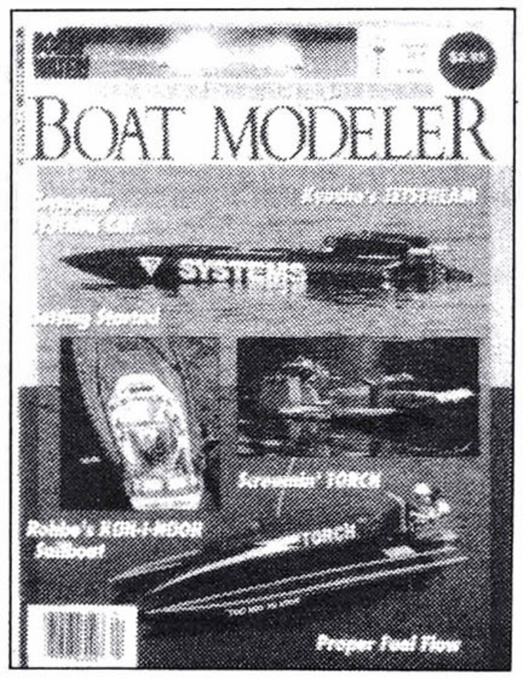

Radio Control Boat Modeler

This quarterly magazine contains all scales of gas and electric boats, including R/C offshore racers, ships, sailboats, steam power, electrics and much more. Also, product reviews and "how-to" information. Two-year subscription (8 issues)–$15.35.**

TO ORDER MAGAZINES, write: P.O. Box 427, Mt. Morris, IL 61054 with your check or money order. For credit card orders, **call 1-800-435-0715** (in IL, 1-800-892-0753).

** For subscriptions outside the U.S., add $10 per year for postage and handling. Foreign payment must be in U.S. funds drawn on a U.S. bank, or by international money order. Please allow 4-6 weeks for delivery of first issue.

ISBN 0-911295-02-X $12.95

12.95
Mel's
$9.50



AIR AGE, INC.

Aviation Magazine and Book
Publishers since 1929